INSPECTION CHAMBER DETAILS FROM TOILET

SCALE : 1 : 10

PLAN

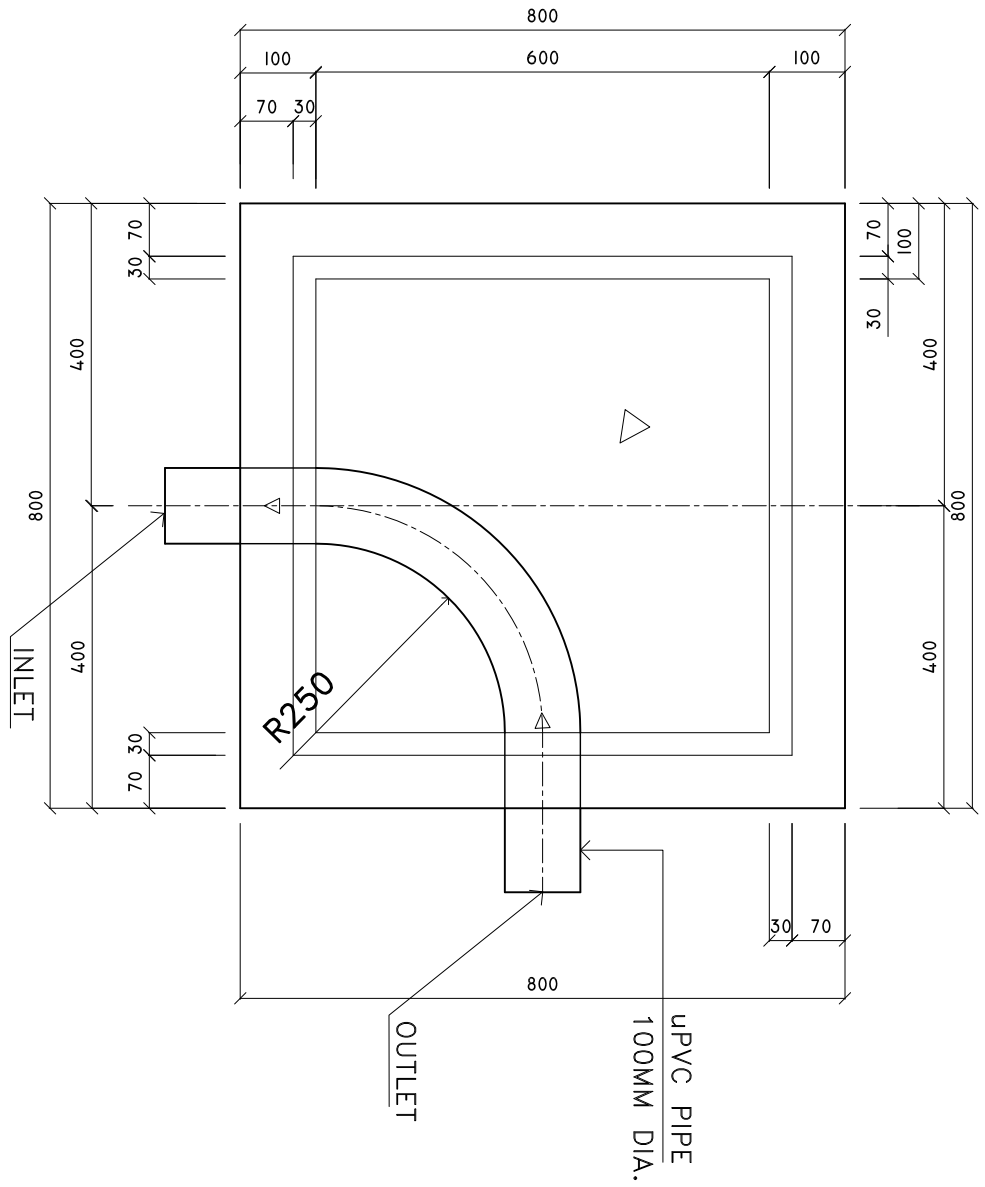

SECTION X-X

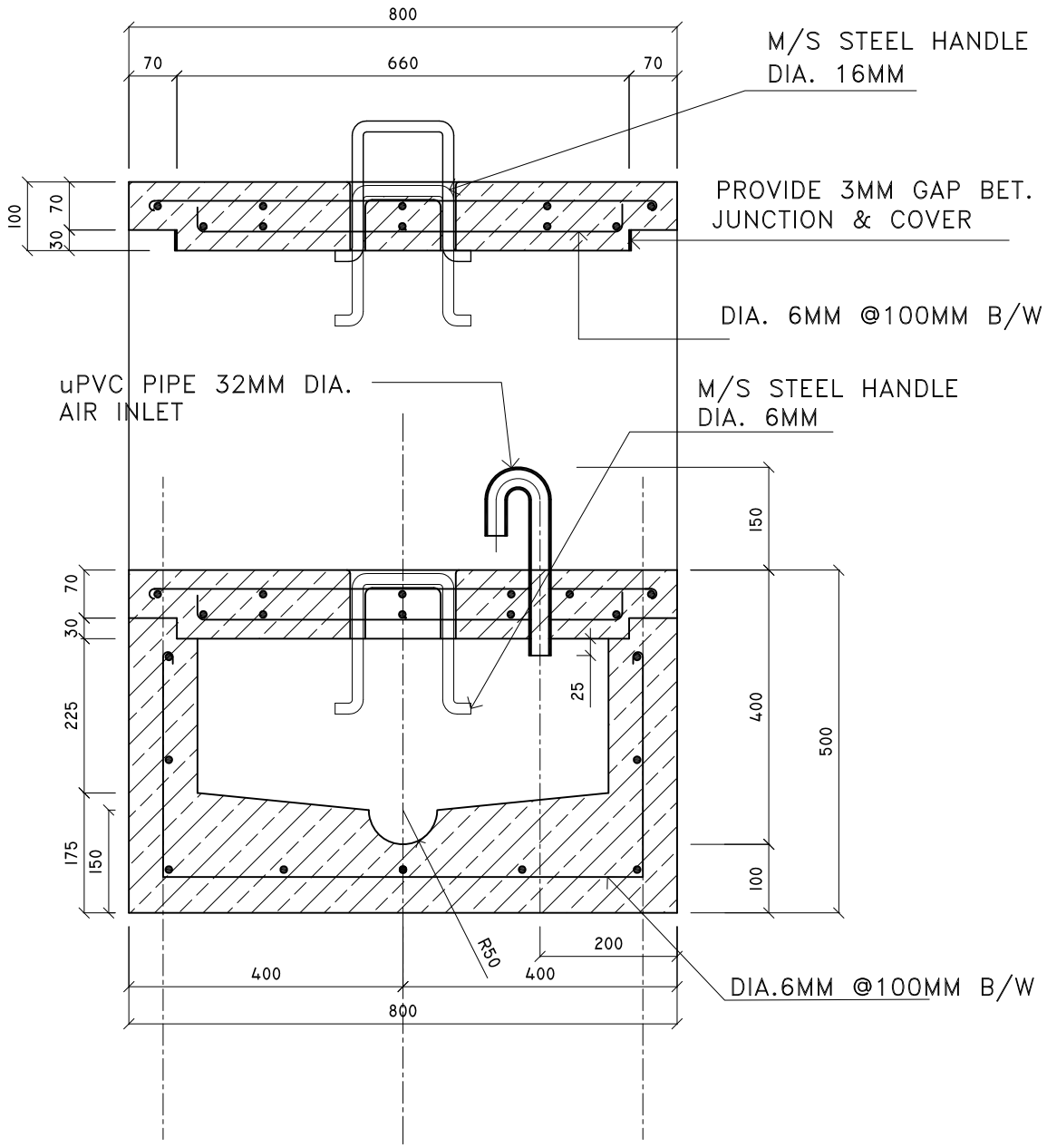

SHEET CONTENTS :

REVISION NOTES:

PROJECT:
CONSTRUCTION OF ACCOMODATION BLOCK

CLIENT:
MINISTRY OF HEALTH

LOCATION:
HDH. KULHUDHUFFUSHI

CONTENTS: *AS GIVEN*

PROJECT MANAGER:

DESIGNER: *ARIZ*

CIV/STR. ENGINEER:

SURVEYED BY: -

DRAWN BY:

CHECKED BY:

DATE : *MAY 2016*

SHEET NO. : /

ADMIN DIVISON
Ministry of Health
Roshanee Building
Sosun Magu'
Tel: 332 8887, Fax: 3328889