CONSTRUCTION OF PROPOSED OFFICE BLOCK,SCIENCE LAB, AV ROOM & 4 CLASSROOM BUILDING (3 STOREY) AT M.MULAKU SCHOOL

TENDER DOCUMENTS

Volume 2

Section VI: *Technical Specifications*

Section VII: *Drawings*

Section VIII: *Bill of Quantities*

Client: Ministry of Education

Consultant: Riyan Pvt. Ltd.

Funding Agency: Government of Maldives

TECHNICAL SPECIFICATIONS

Contents

1. PRELIMINARIES 4
- 1.1 Standard and Codes 4
- 1.2 Drawings and Specifications 4
- 1.3 Transportation to the Site 4
- 1.4 Schedule and Execution Plan 4
- 1.5 Repairing and Correction 4
- 1.6 Workmanship and Materials 4
- 1.7 Obvious Work 5
- 1.8 Protection 5
- 1.9 Scaffolding 5
- 1.10 Construction Machinery, Plants and Equipment's 5
- 1.11 Samples 5
- 1.12 Ordering Materials 6
- 1.13 Water and Electricity for the Works 6
- 1.14 Site Offices for Contractor 6
- 1.15 Contractor's Site Area 7
- 1.16 Progress Meetings 7
- 1.17 Progress Photographs 7
- 1.18 Setting Out 7
- 1.19 Billboards 8
- 1.20 Loading in Excess of Design Load 8
- 1.21 Building Permit 8
- 1.22 Permanent Drainage, Electricity and Water connection 8
- 1.23 Handing Over 8

2. SITE WORKS 9
- 2.1 Demolition 9
- 2.2 Site Clearance 10
- 2.2 Excavation 10
- 2.3 De-watering 11
- 2.4 Backfill 12

3. CONCRETE WORKS 13
- 3.1 General 13
- 3.2 Cement 13
- 3.3 Aggregate 13
- 3.4 Water 15
- 3.5 Handling and Storage of Material 15
- 3.6 Mix Proportion and Strength 15
- 3.7 Production of Concrete 16
- 3.8 Transporting and Placing 17
- 3.9 Concrete Curing 18
- 3.10 Test 18
- 3.11 Concrete 18
- 3.12 Defective Concrete and Finishes 19

4. CONCRETE FORMWORK 19
- 4.1 Structure and Material 19
- 4.2 Performance 20

5. STEEL REINFORCEMENT **23**

5.1 Material 23
5.2 Cleaning 23
5.3 Bending and Laps 23
5.4 Reinforcement Cover 23
5.5 Placing 23

6. WATER PROOFING **24**

6.1 Description of work 24
6.2 Materials 24
6.3 Storage of materials 24
6.4 Surface preparation 24
6.5 Application 25
6.6 Curing 25

7. EMBEDDED DAMPPROOF MEMBRANE **26**

7.1 General 26
7.2 Products 26
7.3 Workmanship 26

8. STRUCTURAL STEEL **27**

8.1 Scope 27
8.2 Materials 27
8.3 Fabrication 27
8.4 Bolt 28
8.5 Welding 29
8.6 Erection and Field Painting 30
8.8 Anchor Bolt 31

9. MASONRY **32**

9.1 Materials 32
9.2 General 32
9.3 Blockwork 33

10. PLASTERING **35**

10.1 General 35
10.2 Materials and Storage 35
10.3 Mixing ratio 35
10.4 Thickness of Coating 35
10.5 Finish 36
10.6 General Preparation 36
10.7 External Plastering 36
10.8 Internal Plastering 37
10.9 External Rendering 37
10.10 Metal Mesh Lathing / Reinforcement For Plastered/Coatings. 38

11. CARPENTRY AND JOINERY **39**

11.1 Materials 39
11.2 Preservation of Timber 39
11.3 Hardware 39
11.4 Dimensions and Finish 39
11.5 Workmanship 39

12. ALUMINIUM DOORS AND WINDOWS **41**

12.1 Aluminium Doors and Windows 41
12.2 Aluminium louvers 42
12.3 Top hung windows, ventilators and side hung doors 43
12.4 Installation 43
12.5 Sealing joints 44

12.6 GLASS INSTALLATION 44

13. METAL WALL PANELS 45

13.1 REFERENCES 45
13.2 SYSTEM DESCRIPTION 45
13.3 SUBMITTALS 46
13.4 QUALITY ASSURANCE 46
13.5 DELIVERY, STORAGE & HANDLING 47
13.6 PROJECT CONDITIONS 47
13.7 WARRANTY 48
PRODUCTS 48
13.8 COMPOSITE FIRE RESISTIVE METAL PANELS 48
13.9 PRODUCT SUBSTITUTIONS 48
13.10 COMPOSITE METAL PANEL MATERIALS 48
13.11 ACCESSORIES 49
13.12 RELATED MATERIALS 49
13.13 FABRICATION 49
13.14 FINISHES 49
13.15 SOURCE QUALITY 49
EXECUTION 49
13.16 MANUFACTURER'S INSTRUCTIONS 49
13.17 EXAMINATION 49
13.18 PREPARATION 49
13.19 INSTALLATION 50
13.20 FIELD QUALITY REQUIREMENTS 50
13.21 ADJUSTING 50
13.22 CLEANING 50
13.23 PROTECTION 50

14. ROOFING 51

14.1 SCOPE 51
14.2 ROOF CLADDING 51
14.3 PRODUCTS 51
14.4 WORKMANSHIP 51
14.5 FIXING 52
14.6 FITTINGS AND FEATURES 52

15. FINISHES 54

15.1 GENERAL 54
15.2 MANUFACTURERS 54
15.3 CERAMIC AND VITREOUS TILE MATERIALS 54
15.11 MORTAR MATERIALS 57
15.12 CEMENT COLOUR 57
15.13 WATERPROOFING 58
15.14 INSTALLATION REQUIREMENTS 58
15.15 FLOOR TILE INSTALLATION 58
15.16 WALL TILE INSTALLATION 59
15.17 GROUTING 59
15.18 DEFECTS IN TILES AND TILE LAYING 59
15.19 GUARANTEES 59

16. PAINTING 60

16.1 MATERIAL 60
16.2 DEFINITION OF TERMINOLOGY 60
16.3 PAINT FINISH SYMBOLS 61
16.4 PAINTING IN GENERAL 61

17.PLUMBING....67
17.1 GENERAL....67
17.2 DRAWINGS AND INFORMATION REQUIRED....67
17.3 RECORD DRAWING....68
17.4 OPERATING AND MAINTENANCE INSTRUCTIONS....68
17.5 TESTS....68
17.6 WORK IN COMMON PIPING....69
17.7 WATER SUPPLY WORK....72
17.8 WATER PUMPS....72
17.9 SPACING OF SUPPORTS....72
17.10 DRAINAGE WORK....73
17.11 LAYING OF PIPES....73
17.12 LAYING OF SEWER WATER MAINS....73
17.13 SEWERS....74
17.14 U.P.V.C PIPES....74
17.15 BENDS AND OTHER SPECIALS....74
17.16 FLANGED JOINTS....74
17.17 SUPPORT FOR U.P.V.C PIPES....75
17.18 SEWER PIPES....75
17.19 AIR VALVES....75
17.20 SCOUR WASHOUT VALVE....75
17.21 FOOT VALVES AND STRAINERS....75
17.22 PRESSURE REDUCERS....76
17.23 WATER METER....76
17.24 EQUILIBRIUM BALL VALVES....76
17.25 FITTINGS....76
17.26 MANHOLES, MANHOLE COVERS AND FRAMES....77
17.27 INTERCEPTOR MANHOLE....77
17.28 FIXTURES AND ACCESSORIES....77
17.29 AS BUILT DRAWINGS....77
17.30 MISCELLANEOUS....78

18.ELECTRICAL INSTALLATIONS....79
18.1 GENERAL....79
18.2 CONDUIT AND CONDUIT ACCESSORIES....82
18.3 WIRES, CABLES AND CORDS....83
18.4 WIRING ACCESSORIES....84
18.5 LIGHT FIXTURES....85
18.6 TESTING....87
18.7 INSTALLATION INSTRUCTION....87
18.8 DISTRIBUTION BOARD....88
18.9 TELEPHONE SYSTEM....88

1. PRELIMINARIES

1.1 Standard and Codes

1.1.1 The Contractor shall, perform the Works in compliance with all regulations, standard specifications or statutes of the Government of Maldives unless otherwise conform to this specification.

1.1.2 The current British Standard Specifications and Codes of Practice shall apply to and form part of these specifications unless otherwise specified in respect of all materials and works to which they have application.

1.2 Drawings and Specifications

1.2.1 Drawings and Specifications are intended to complement each other, so that if anything is shown on the Drawings, but not mentioned in the specifications or vice versa, it is to be furnished and built as though specifically set forth in all three. If any discrepancies, errors, ambiguities or omissions occur in the Drawings or Specifications, the same shall be referred to the Consultant before proceeding with the Works, and the Consultant decision on such discrepancies, errors, ambiguities or omissions shall be final.

1.2.2 In addition to the Drawings and Specifications attached hereto, the Consultant will during the progress of the Works furnish additional Drawings, Specifications, and instructions as may be necessary, in the opinion of the Consultant for the purpose of the proper and adequate execution and maintenance of the Works, and the Contractor shall make his work conform. Such drawings and instructions shall be deemed to be part of the Contract Documents.

1.3 Transportation to the Site

1.3.1 The Contractor shall provide all necessary transport, handling and storage of all materials, components and the like to their points of installation on site including transport to and from storage. The Contractor shall provide all necessary transport of labour to and from the site.

1.4 Schedule and Execution Plan

1.4.1 The Contractor shall prepare and submit to the Consultant for approval the construction schedule and an execution plan of temporary facilities, stockyards, etc., before the start of the Works.

1.5 Repairing and Correction

1.5.1 Any breakage(s) or defect(s) of existing buildings, road utilities, or part(s) of them caused by the Works including transportation for the works shall be repaired or corrected by the Contractor with his responsibility.

1.6 Workmanship and Materials

1.6.1 All workmanship shall be of the best standard. All goods and materials to be incorporated in the Works must be new, unused, of the most recent or current models and incorporate all recent improvements in design and materials unless provided otherwise in the contract.

1.6.2 The Contractor shall submit for the approval of the Consultant a list of names and addresses of the manufacturers and trade marks or names of all the various types of materials and goods he propose to use in the Works. The list shall include reference to the specifications clause or article to which the materials and goods apply.

1.6.3 Materials shall be obtained from approved sources and used in accordance with the manufacturer's printed instructions. In the absence of a specification all materials shall comply with a relevant standard. The consultant shall order the removal of any materials, which he has not approved.

1.6.4 No orders for materials and goods shall be placed until approval has been obtained for the materials and goods from the consultant.

1.6.5 The Contractor shall note that it is his responsibility to include in his price for the cost of the materials and products as specified and no adjustment will be allowed should the consultant reject the alternatives.

1.7 Obvious Work

1.7.1 Where an item of work is obviously required for the type of work being undertaken then it shall be deemed to have been included even though the item is not specifically mentioned or shown in the Drawings or Specifications.

1.8 Protection

1.8.1 The Contractor shall have the Works and adjoining properties protected from inclement weather. Any loss or damage caused by weather, carelessness or lack of skill of workers, accident or otherwise shall be of such property that is affected. The Contractor shall provide all necessary dustsheets, barriers and guardrails and clear away at completion.

1.8.2 The work shall be suspended for such time as may be directed and/or approve by the Consultant if the specified quality of work is difficult to maintain during inclement weather.

1.9 Scaffolding

1.9.1 The Contractor shall provide, erect, maintain, dismantle and clear away at completion proper and adequate including that required for subcontractor and suppliers. Putlog holes shall be made good to match the adjacent surface as the scaffolding is dismantled.

1.9.2 The Contractor shall be responsible for all safety precautions in connection with the scaffolding including the provision of all bracing, scaffold boards, toe boards and the like and for entire sufficiency for the work.

1.10 Construction Machinery, Plants and Equipment's

1.10.1 All necessary construction machines shall be provided and maintained by the Contractor and shall be approved by the Consultant.

1.10.2 If cranes or any other type of plant which places any load on the structure are proposed, all details of such plant shall be submitted to the Consultant for approval before the work is actually commenced. If approved by the Consultant and contractually acceptable, permission may be given for the structure to be strengthened, in order to carry out loads, and the Contractor shall be responsible for any resulting additional costs.

1.10.3 The Contractor shall be responsible for making good to the satisfaction of the Consultant any damage to the permanent structure that may be caused by his plant and equipment.

1.11 Samples

1.11.1 The Contractor shall furnish for the approval with reasonable promptness, all samples as directed by the consultant. The Consultant shall check and approve such materials with reasonable promptness only for conformance with the design concept of the Works and for compliance with the information given in the Contract Document. The Work shall be in accordance with the approved samples

1.11.2 All samples shall be delivered to the Consultant's office with all charges in connection therewith paid by the Contractor and deemed to be included in the Contract Price.

1.11.3 Duplicate final approved samples, in addition to any required for the Contractor's use, shall be furnished to the Consultant, one for office use and one for the site.

1.11.4 Samples shall be furnished so as not to delay fabrication, allowing the consultant reasonable time for consideration of the sample submitted.

1.11.5 Each sample shall be properly labelled with the name and quality of the material, manufacturer's name, name of project, the contractor's name and date of submission, and the specification clause to which the sample refers.

1.12 Ordering Materials

1.12.1 The Bills of Quantities shall not be used as a basis for ordering materials and the Contractor is entirely responsible for assessing the quantities of materials to be ordered.

1.12.2 Upon receipt of the Consultant's order to commence the Works, the Contractor shall immediately place orders for all required materials and will be held responsible for any delays occurring due to late placing of such orders.

1.12.3 The Contractor shall pay all expenses, taxes and dues etc. incurred on the procurement of materials from abroad

1.13 Water and Electricity for the Works

1.13.1 The Contractor shall make all necessary arrangements and provide all water for the proper execution of the Works, together with all transport, temporary plumbing, storage and distribution, pay all charges and alter, adept and maintain temporary work as necessary and remove and make good at completion.

1.13.2 The Contractor shall make all necessary arrangements and provide all artificial lighting and power (maintain a generator if necessary) for the proper execution and security of the Works and its protection, with all meters, temporary wiring and fittings, pay all charges and alter adapt and maintain the temporary work as necessary and remove and make good at completion.

1.14 Site Offices for Contractor

1.14.1 The Contractor shall provide maintain and clear away on completion of the Contract all necessary site offices, canteens, messing and welfare facilities, temporary buildings, toilets and the like for all site staff employed by the Contractor and required by subcontractors and suppliers.

1.14.2 The offices shall be open at all normal working hours to receive instructions, notices and other communications.

1.14.3 The Contractor shall obtain the approval of the Consultant of the proposed site layout, type and drainage arrangement of all the buildings prior to erection of same. All buildings shall be supplied and maintained in good condition and of neat appearance, all maintenance to same as instructed by the Consultant shall be carried out at the Contractor's expense.

1.14.4 Under no circumstances shall overnight accommodation be permitted on Site except for the site watchman in carrying out his duties.

1.15 Contractor’s Site Area

1.15.1 Throughout the period of the Contract the Contractor shall maintain the area of his operation within the limits of the Site in a clean, tidy and safe condition by arranging materials and the like in an orderly manner. All rubbish, debris, waste materials and the like shall be systematically cleared from the Site as it accumulates.

1.15.2 The Contractor shall take all steps necessary as directed by the Consultant to minimize or eliminate dust, noise or any other nuisance, which may occur. Plant emitting dust, smoke, excessive noise or other nuisance shall not be permitted.

1.16 Progress Meetings

1.16.1 During the course of the Works, progress meetings shall be held at fortnightly intervals for the purpose of co-ordinating the Contractor's works and to ensure that full compliance is maintained.

1.16.2 Minutes of such meetings should be recorded; copies will be distributed to all persons concerned and full effect shall be given to all instructions contained therein.

1.16.3 Prior to such meetings the Contractor shall give to the Consultant's Representative details in writing of that portion of the Works he proposes to construct during the coming two weeks with details of the plant and method he proposes to employ. These proposals shall be discussed at the meeting and no work based on such proposals shall proceed without the approval of the Consultant's Representative.

1.16.4 The Contractor shall submit all reports as instructed by the Consultant in connection with progress meetings and the day to day management of the Works.

1.17 Progress Photographs

1.17.1 The Contractor shall supply once a month, at the time of submitting his Interim Certificates, twelve photographs from 36 exposures showing the progress of the Works. The Consultant shall direct the times and position from which the photographs are to be taken.

1.17.2 The photographs shall be submitted in three copies un mounted of a size not less than 15 x 10 centimetres with the description of the viewpoint stamped in ink on the back. The negative shall have the date on it and remain the property of the Consultant and no prints from these negatives may be supplied to others unless previously authorized in writing by the Consultant.

1.18 Setting Out

1.18.1 The Contractor shall be responsible for accurately setting out the Works to the specified positions, dimension, levels and Building Lines and also checking the site surveys for dimensional and level accuracy and reporting any discrepancies before building work commences.

1.18.2 The Contractor shall provide the Consultant with all facilities, equipment and labour to enable him to check the setting out and levels of the Works at all times. The checking of any setting out point, line or level by the Consultant shall not in any way relieve the Contractor of his responsibility

1.18.3 All setting out points, benchmarks, site rails, pegs and other survey points shall be clearly marked and protected from damage or disturbance during the execution of the Works

1.19 Billboards

1.19.1 The Contractor shall provide and maintain two billboards for the Site each consisting of a plastic board panel of size not more than 2.4m x1.2m (2.88m^2) supported 2.5m above the ground with steel angle framing or similar material and fixed in concrete foundations.

1.19.2 Each board shall have the following written in both Dhivehi and English (letter height not to exceed 100mm) by a skilled sign writer:

The name of Project

The name of Employer

The name and address of Consultant

The name and address of Contractor

1.19.3 A scaled layout shall be prepared and submitted for the Consultant's approval before fabrication.

1.19.4 No advertising material other than the above will be permitted.

1.19.5 The location and layout of Sub-Contractors or Manufacturer's billboards, if allowed, must be submitted for the Consultant's approval.

1.20 Loading in Excess of Design Load

1.20.1 No loading in excess of the design loading shall be placed on any portion of the structure without the written permission of the Consultant

1.20.2 If such permission is granted, all beams or other members of the structure which are subjected to loading other than the designed loading shall be strengthened and supported to the satisfaction of the Consultant, and the Contractor shall be responsible for any resulting additional costs

1.20.3 The Contractor shall be responsible for making good to the satisfaction of the Consultant any damage to the permanent structure that may be caused by such excess loading.

1.21 Building Permit

1.21.1 The Contractor shall allow for obtaining the building permit and for paying all fees in connection therewith.

1.22 Permanent Drainage, Electricity and Water connection

1.22.1 The Contractor shall allow for arranging and obtaining the permanent drainage, water and electricity connections to the proposed development and he shall be responsible for making all payments in connection therewith.

1.23 Handing Over

1.23.1 Prior to handing over the proposed development the Contractor shall gain the approvals and respective Completion Certificates from all the local government authorities and the like that the work has been completed in accordance with their requirements. Any payment in connection therewith shall be paid by the Contractor.

2. SITE WORKS

2.1 Demolition

2.1.1 Demolition includes the complete demolition including grubbing up of foundations and the proper termination of all services as required by the Drawings including the removal and disposal of all demolished materials. The demolition work shall be executed in a systematic manner.

2.1.2 Demolition operations and the removal of debris shall be carried out to ensure minimum interference with roads, streets, footpaths and other adjacent occupied or used facilities.

2.1.3 Damage caused to adjacent facilities by demolition operations shall be repaired by the Contractor at his own expense. The Contractor shall arrange and pay for the disconnecting, removing and capping of utility services, notify the affected utility agency in advance and obtain written approval before commencing work.

2.1.4 Before commencement of work, submit a method statement to the Consultant as to the proposed method and sequence of demolition of the building and a safety plan which shall cover the risk assessment and safety measures for such method statement. The Consultant reserves the right to prohibit any method of execution of the Works which he regards as unsafe.

2.1.5 Drawing information, particularly for unconventional layouts and special structures, will be made available to the Contractor if possible. The Contractor shall state in his method statement if it is based on such drawings. In the absence of drawings, the Consultant may require a detailed structural survey to be carried out and endorsed by a Registered Structural Engineer (or equivalent) to define the existing structure and the appropriate method and sequence of demolition.

2.1.6 No work on site shall be allowed to commence until the proposed method statement has been accepted and all precautionary measures, hoardings, covered walkways, and other requirements are in place.

2.2 Site Clearance

The Site shall be cleared of all vegetation, rock, boulders, etc. and surface soil shall be removed as directed by the Consultant. The trees which are to be retained shall be protected from damage

Spreading, levelling and consolidating on site where required, shall be made with suitable surplus excavated material obtained from the Site. Other soils used for filling shall be approved by the Consultant

The Contractor shall dispose all unsuitable and surplus excavated material

The Contractor shall tidy up and leave the Site in a clean and sanitary condition at all times during the execution of the Works.

2.2 Excavation

2.2.1 Excavation shall be performed to the required depth as shown in the Drawings.

2.2.2 A survey of the existing site shall be made and the results of same submitted to the Consultant before commencement of the work

2.2.3 Excavation area shall be protected from any water flowing in. Sides of excavations shall be shored or inclined to retain excavation unless otherwise specified

2.2.4 Excavation near adjoining structures shall be executed with care so as not to damage those structures.

2.2.5 The Contractor shall take all necessary precautions during the excavation for the Works particularly those excavation which are adjoining existing buildings and shall protect such buildings from the damage or collapse by means of temporary or permanent shoring, strutting, sheet piling or underpinning or excavation in short lengths and/or other methods as he deems fit and also he shall properly support all foundations, trenches, walls, floors, etc. affecting the safety of the adjoining existing buildings.

2.2.6 The Contractor shall alter, adopt and maintain all such works described above for the whole period of the Contract and shall finally clear away and make good all damages done.

2.2.7 The construction and efficiency of the shoring, underpinning, strutting and the like for the purpose for which it is erected shall be the responsibility of the Contractor, should any subsidence or any other damage occur due to the inefficiency of the shoring, underpinning, strutting and the like or any other support provided, the damage shall be made good by the Contractor at his own expense and responsibility.

2.2.8 The shoring, strutting, piling and the like, shall be executed in such a manner as to cause as little inconvenience as possible to adjoining owners or the public and the Contractor shall be responsible for negotiating with the adjoining owners the means to safeguard their property and for the use of any portion of their land for the purpose of executing the excavations and no claims submitted on this ground will be entertained.

2.2.9 The Contractor shall be held solely responsible for the safety of the adjoining existing buildings, the sufficiency of all temporary or permanent shoring, underpinning, piling, and the like.

2.2.10 The Contractor shall keep the Consultant informed as to manner in which he intends to proceed with the execution of the excavations and obtain his approval. Such approval if given shall not absolve the Contractor of his responsibility.

2.2.11 Excavation shall extend a sufficient distance from walls, footings, etc. to allow space for placing and removing shoring and formwork, for performing all work in the excavations and for the inspection of same.

2.2.12 Excavated material shall be deposited within specified areas as directed unless otherwise specified.

2.2.13 The Contractor is deemed to have inspected the site and to leave ascertained for himself as to the nature of the soil, etc. and also the areas where to collect and stack the materials for which necessary site clearance shall have to be made at his own cost.

2.2.14 Stacking or excavated materials shall be done at places approved by the Consultant and he shall have recorded the original ground levels of such places jointly with the Contractor before commencement of stacking operation.

2.2.15 Extra excavation and allied lead/lift required specifically for providing working space to workmen or shuttering to walls of basement etc. shall be measured for payment, no extra claim being allowed for such work incidental to development and executions of allied jobs. Only authorized excavation approved by the Consultant shall be paid for

2.2.16 Sufficient clear working space shall be left all around excavated area. The disposal of waste/unserviceable materials may be in filling and/or in embankment according to nature of place of disposal. The appropriate specifications for filling and/or embankment shall apply

2.2.17 All foundation trenches shall be excavated to the full widths and depths shown on the drawings or to such greater or smaller depths as may be found necessary in the opinion of the Consultant and so instructed by his representative.

2.2.18 Should any excavation be taken down below the specified levels, the Contractor shall fill in such excavation at his own cost with cement concrete specified for foundations, well rammed in position until it is brought up to the level.

2.2.19 The Contractor shall notify to the Consultant when the excavation is completed and no concrete or masonry shall be laid until the Consultant has inspected of the soil for each individual footing.

2.2.20 All foundation pits shall be refilled to the original surface of the ground with approved materials, which shall be well consolidated as instructed by the Consultant.

2.2.21 The Contractor shall erect temporary barricades around the excavations and if necessary make provisions of red lamps.

2.2.22 The Contractor shall remove/maintain/restore all service lines like telephone, water supply, electricity etc. without any extra charges.

2.3 De-watering

2.3.1 Where the excavation level is below the natural water table and it is necessary to pump continuously from the excavation or to install a specialist type of dewatering equipment around the perimeter of the site or excavation, the Contractor will be responsible for ensuring the safety and stability of all adjoining structures and services or utilities above or below ground level.

2.3.2 It will also be the responsibility of the Contractor that the equipment installed shall ensure that the excavation and subsequent construction is carried out in dry conditions.

2.3.3 Continuous or permanent de-watering of the excavation or Site may not be undertaken without the written approval of the Consultant and the methods to be employed shall also comply with Codes of Practice and Local Authority requirements.

2.3.4 The water pumped from the excavations or well points shall be pumped to disposal points or sumps approved by the Consultant and the Local Ward Office and if so required be passed through settling tanks before disposal.

2.3.5 Unless prior approval has been obtained no water must be disposed of in the Municipality's sewer systems.

2.4 Backfill

2.4.1 All earth used for filling shall unless otherwise stated, be selected hard dry material from the excavation The maximum dry density of the fill material shall be not less than 1600 kg/m^3.

2.4.2 The backfill of excavations shall be placed in horizontal layers not exceeding 300mm in thickness. Each layer shall be compacted by hand or other mechanical means to the required density before the next layer is added

2.4.3 Care shall be taken when filling or back-filling to avoid any wedging action or eccentric action upon or against the structure of the work.

2.4.4 Before placing of fill, the surface of the sub-grade shall be compacted at optimum water content to the same percentage of maximum dry density required of subsequent lay.

2.4.5 The Consultant will inspect all compacting devices that the Contractor proposes and shall have the right to reject any device which he feels is unsuitable for the job.

2.4.6 Heavy equipment for spreading and compacting fill and backfill shall not be operated closer to walls than a distance to the difference in height between the top of the footings and the layer being compacted.

2.4.7 When back-filling behind retaining walls, basement walls and the like the said structures shall be kept propped during the complete operation. The hydraulic compaction of fill shall not be permitted and the back filling shall be carried out in layers not exceeding 150mm thick.

2.4.8 Each layer shall be compacted to 90% of the modified compaction. No back filling shall be carried out until the wall concrete has achieved its full works cube strength and care shall be exercised so as not to damage the external tanking membrane and its protection.

3. CONCRETE WORKS

3.1 General

3.1.1 Materials used in the Works shall be new, of the qualities and kinds specified herein and equal to approved samples. Delivery shall be made sufficiently in advance to enable further samples to be taken and tested if required. No materials shall be used until approved and materials not approved shall be immediately removed from the Works.

3.1.2 Materials shall be transported, handled and stored on the site or elsewhere in such a manner to prevent damage, deterioration or contamination.

3.2 Cement

3.2.1 Cement shall be Ordinary Portland cement of an approved brand.

3.2.2 Cement shall conform to BS 12.

Cement shall be of recent manufacturer and used within 6 months of manufactured date.

The Contractor shall with each fresh consignment of cement delivered to the site furnish the Consultant with a copy of the Manufacturer's statement of compliance with the above Standard Specifications together with the date of manufacture, certified by an independent agency in the country of origin and its date of delivery to Site.

Check tests will be required by the Consultant. These tests shall be carried out at the Contractor's expense.

Any cement failing to meet the required standards will be rejected and replaced at the Contractor's expense.

Any cement not conforming to BS 12 shall not be used unless otherwise approved by the Consultant.

3.3 Aggregate

3.3.1 Fine aggregate shall be river sand conforming to BS 882.

3.3.2 Coarse aggregate shall be crushed stone excluding limestone or derivatives of limestone conforming to BS 812.

3.3.3 Aggregate shall not contain injurious amount of rubbish, dirt, organic impurities and other foreign matters.

3.3.4 Strength of aggregate shall be more than that of hardened concrete paste.

3.3.5 Shape of coarse aggregate shall not be flat or slender.

3.3.6 Aggregate to be used in concrete shall possess the qualities indicated in the following tables.

Quality of Aggregates

Aggregate type	Open dry specific gravity	Percentage of water absorption (%)	Percentage of solid volume for the evaluation of particle shape (%)	Clay lump (%)	Loss in washing test (%)	Organic impurity (%)	Water soluble chloride (%)
Coarse aggregate	<= 2.5	<= 3.0	=> 55	<= 0.25	<= 1.5	0	<= 0.25
Fine aggregate	>=2.5	<= 3.5	-	<= 1.0	<= 3.0	0	<= 0.01

* Colour of test solution not to be darker than standard solution

Grading requirements for aggregates

Percentage passing each sieve by weight (%)

Agg.	**Max. size (mm)**	**Nominal sieve size (mm)**											
		40	30	25	20	15	10	5	2.5	1.2	0.6	0.3	0.15
Coarse	25	100	100	90 - 100	60 - 90		20 - 50	0 - 10	0 - 5				
	20			100	90 - 100		20 - 55	0 - 10	0 - 50				
Fine							100	90 - 100	80 - 100	50 - 90	25 - 65	10 - 35	2 - 10

.3.7 Manufactured sand and blast furnace slag to be use in concrete shall not be used unless otherwise specified or approved by the Consultant.

3.3.8 In case of using fine aggregate of 0.01% or more water soluble chloride content, the necessary measures for corrosion inhibiting of reinforcement shall be instructed by the Consultant.

3.3.9 The maximum size of coarse aggregate shall be 25 mm.

3.3.10 Sources of aggregate shall be to the approval of the Consultant and samples of aggregate from the proposed source shall be submitted to the Consultant at least 28 days before its intended use.

3.4 Water

3.4.1 Water shall not contain injurious amount of impurities that may adversely affect concrete and reinforcement.

3.4.2 Ground water shall not be used for concrete works.

3.4.3 Water shall be obtained from a public supply where possible, and shall be taken from any other sources only if approved by the Consultant.

3.4.4 Only water of approved quality shall be used for washing out formwork, curing concrete and similar surfaces.

3.5 Handling and Storage of Material

3.5.1 Cement

3.5.1.1 Cement shall be stored in a manner to prevent weathering.

3.5.1.2 Bagged cement shall be piled no more than 10 bags so as to permit easy inspection

3.5.2 Cement caked even to the slightest extent shall not be used. Such cement and rejected cement shall be immediately separated from other bags of cement so that they shall not be mistaken for others.

3.5.3 Aggregate

3.5.3.1 Aggregate shall be stored in a manner effectively separating coarse and fine aggregate according to type and shall be prevented from inclusion of dirt, rubbish and other undesirable foreign matters.

3.5.3.2 Coarse aggregate shall be unloaded and piled in a manner not to cause segregation of small and large particles. Aggregate to be stored in piles shall be in mounds of moderate height and at a location where good drainage is provided.

3.6 Mix Proportion and Strength

3.6.1 Mix ratio for reinforced concrete shall be in the proportion 1:2:3 (cement: fine aggregate: coarse aggregate) by dry volume.

3.6.2 Mix ratio for lean concrete shall be in the proportion 1:2:6 (cement: fine aggregate: coarse aggregate) by dry volume.

3.6.3 Water-cement ratio for concrete shall be 0.4% to 0.45%

3.6.4 The specified design strength of reinforced concrete shall be 25 N/mm^2

3.6.5 The required slump of concrete shall be 100 mm.

3.6.6 Design mix proportion shall be to obtain required workability, consistency and durability.

3.6.7 The lean concrete shall be 15 N/mm^2

3.7 Production of Concrete

3.7.1 Field-mixed Concrete Plant

3.7.1.1 The Contractor shall select the necessary facilities for storage, batching, mixing and transporting of each of the materials and submit them for approval of the Consultant prior to start work.

3.7.2 Measuring

3.7.2.1 All materials shall be measure by volume for each batch and water may be measured volumetrically.

3.7.2.2 Cement shall be measured by number of bags unless automatic cement weight measure is in use.

3.7.3 Mixing Control

3.7.3.1 Concrete mixture shall be constantly controlled to obtain required workability and mixed strength. Mixing time for each batch shall be not more than 3 minutes.

3.7.4 Quality Control

3.7.4.1 The Contractor shall conduct tests for quality control toward insuring that concrete of the required quality is constantly produced.

3.7.4.2 The Contractor shall have all quality control tests report ready for submission as required by the Consultant.

3.7.5 Quality Inspection of Concrete at the Point of Placement

3.7.5.1 The Contractor shall conduct tests on concrete at the point of placement. When test results meet the tolerances given below, the concrete shall be qualified to have passed the tests.

The tolerance between actual slump and required slump of the concrete shall be ⍰ 2.0 mm

3.7.5.2 For the estimation of compressive strength of concrete in compressive strength tests, when the average value of compressive strength of concrete obtained in a test is not less than the specified design strength, it shall be qualified to have passed the test. In case of failure to the above requirements, the Contractor shall take necessary measures such as to perform appropriate test as instructed by the Consultant.

3.8 Transporting and Placing

3.8.1 General

3.8.1.1 The Contractor shall establish manner and schedule for transporting and placing of concrete and obtain approval of the Consultant.

3.8.1.2 Concrete shall be transported in a manner to minimize segregation, spill, age and other changes in quality thereof.

3.8.1.3 Concrete shall be placed and consolidated in a manner to insure uniformity and optimum density.

3.8.1.4 In case of rain or other conditions that may affect the quality of concrete during concreting, the Contractor shall take necessary measures as instructed by the Consultant.

3.8.2 Time Limit

3.8.2.1 The time limit from start of mixing to completion of placing of a batch as a rule shall be 30 minutes.

3.8.3 Preparation prior to Placing.

3.8.3.1 The place where concrete is to be deposited shall be cleaned and sheathing shall be sprinkled with water. Subsequently, water accumulated in the form shall be removed.

3.8.4 Construction Joint

3.8.4.1 Joint surfaces shall be cleaned, made free of laitance and other foreign matters, and wetted prior to concreting. Joint surface shall be roughened if directed by the Consultant.

3.8.4.2 The locations of shapes of construction joints shall be consulted and approved by the Consultant.

3.8.5 Concrete Placing

3.8.5.1 Concrete placing shall be proceeded to keep the surface of placed concrete as horizontal as possible.

3.8.5.2 Concrete shall be continuously poured to compact around reinforcing bars and corners of formwork.

3.8.5.3 The maximum time interval between placements of continuous concreting shall not exceed 0.5 hours. However, when special measures are taken this time limit may be changed according to instruction or approval of the Consultant.

3.8.6 Consolidation

3.8.6.1 Vibrating of concrete and tapping of formwork shall be performed to wall, column and other places difficult for concrete to proceed. Proper number of workers for placing and compacting concrete shall be arranged.

3.8.6.2 Vibrator shall be operated for concrete called for water tightness, difficult portion for concrete to proceed and other cases directed by the Consultant. However, vibrator shall not be touched reinforcing bars and shall not be operated more than 30 seconds at same spot.

3.8.6.3 Concrete shall be placed 300 - 600 mm thickness at once in case vibrator is performing. In case flexible-insert-vibrator is called for, concrete shall not be placed thicker than the length of the insert or vibrator at one pouring.

3.8.7 Placing Speed

3.8.7.1 Concrete shall be placed at the speed suited for the workability of the concrete and condition of the place of placement, which insures proper consolidation of concrete.

3.9 Concrete Curing

3.9.1 Curing Method

3.9.1.1 After concrete has been placed, the concrete surface shall be kept moist by sprayed with water or by other appropriate methods, and shall be protected from direct sunlight and rapid drying. The top surface of slabs shall be kept flooded with water at all times after concreting for the duration of curing period. This curing period shall be for not less than 14 days.

3.9.1.2 As a rule, no foot traffic or loads shall be permitted on concrete for at least 24 hours after placement.

3.10 Test

3.10.1 General

3.10.1.1 The contractor shall be required to conduct all tests according to BS method and procedure.

3.10.1.2 Test, as a rule, shall be conducted at the locations directed or at the testing institutions approved by the Consultant.

3.10.1.3 The Consultant shall conduct test, as a rule.

3.10.1.4 In case of failure in test, measure shall be taken as instructed by the Consultant.

3.10.1.5 The Contractor shall keep test records during the work and for 2 years after completion of the contracted work.

3.10.2 Material

3.10.2.1 Cement Test

(1) Setting test.
(2) Soundness test.
(3) Compressive strength test.

Note: Item (1) shall be conducted once in every manufacturer.
Item (2) & (3) shall be conducted once in every 2,000 bags.

3.10.2.2 Aggregate test:

(1) Grading and fineness modules.

3.11 Concrete

3.11.1 Fresh concrete

Slump, air content, shall be conducted daily, and more often at request of the Consultant.

3.11.2 Compressive strength test of concrete

Test for estimation on strength of concrete in structure:

3.11.2.1 In order to assume estimated strength of concrete in structure, compressive strength test shall be conducted for prepared test pieces on the 7th day and 28th day and those test pieces shall be made for sampling at placing of concreting.

3.11.2.2 Strength test shall be conducted for each of the following conditions: each days pour, each class of concrete, each change of supplies or source and each 100 cubic meter of concrete or fraction thereof. The number of test pieces to be used in a test shall be not less than 3 for each test of the 7th day and the 28th day unless otherwise instructed by the Consultant.

3.11.2.3 Test pieces shall be made in accordance with British Standards, and sampling shall be taken as near as possible at the point of placement.

3.11.2.4 Test pieces shall be stored without being disturbed and shall be covered during the first 24 hours, and carefully transported specimens to the testing laboratory. Test pieces shall be cured in water after de-moulding. The temperature of test pieces shall be kept as close as possible to the temperature of the concrete in structure until the time of testing.

3.11.2.5 The test results shall be expressed in the average value by calculating the average compressive strength of all test pieces. The average value must be equal to or greater than the specified strength.

3.12 Defective Concrete and Finishes

3.12.1 Honeycombed surfaces shall be made good or on the instruction of the Consultant be cut out by the Contractor and make good at his own expense.

3.12.2 Concealed concrete faces shall left as from the formwork except honeycombed surfaces shall be made good. Faces of concrete to be rendered shall be roughened by approved means to form a key. Faces of concrete that are to have finished other than those specified shall be prepared in an approved manner as instructed by the Consultant

4. CONCRETE FORMWORK

4.1 Structure and Material

4.1.1 Structure

4.1.1.1 Formwork shall be performed to obtain accurate concrete in accordance with the designated drawings.

4.1.1.2 Formwork shall be firmed and secured to bear the force of concreting and tightened to avoid cement paste seeping.

4.1.2 Materials

4.1.2.1 Sheathing for formwork shall be waterproof plywood of not less than 12 mm thick. Joint of sheathing shall be butt joint and firmly assembled. In case of using wood board for sheathing, boards shall be 15 mm thick and applied planer. Joint shall be tongued and grooved unless otherwise approved by the Consultant.

4.1.2.2 Form liners shall be sound and suitable materials to accurately and safely cast the in-situ concrete structure as shown on the Drawings.

4.1.2.3 Timber form boards for sheathing where used for fair-faced concrete shall be of such new materials as not to cause any defects to the surface of the concrete. Special care shall be taken in fabrication, storage and protection of these boards.

4.1.3 Other Material

4.1.3.1 Fastening hardware to be used shall be those with allowable tensile strength guaranteed by manufacturer through strength tests.

4.1.3.2 Form oil shall not have injurious effects on quality of concrete nor to bonding of surface finishing materials and shall be subject to approval of the Consultant.

4.2 Performance

4.2.1 Design of formwork

4.2.1.1 Formwork shall be designed to withstand construction leads during concreting, lateral pressure of fresh concrete, shock and vibrators due to concrete placing.

4.2.1.2 Formwork shall be free of injurious leakage of water, easy to remove, and shall not damage concrete at removal.

4.2.1.3 Supports shall be provided with the adequate horizontal and diagonal bracing and/or stays to prevent collapsing, heaving and twisting of formwork due to horizontal loads working during concrete placing.

4.2.2 Tolerance

The dimensional tolerances in location and cross section of concrete member used for designing and construction of formwork shall conform to the following table.

Standard Values of Dimensional tolerances

Item	Tolerance (mm)
Tolerance in distance from datum line of each floor to respective members	+ 10
Tolerance in cross section of columns, beams and walls	- 5 , + 10
Tolerance in thickness of floor and roof slabs	0, +10

4.2.3 Fabrication and Erection

4.2.3.1 Erection of formwork, and transportation and storage of materials thereof shall be started only after previously placed concrete has reached an age which acceptance of these loads will not have any adverse effect on the concrete.

4.2.3.2 Sheathing shall be fabricated and installed accurately to match the locations, shapes and dimensions of members called for in the Drawings.

4.2.3.3 Sheathing shall be installed tightly so as not to permit cement paste or mortar to escape from joints.

4.2.3.4 Pipes, boxes and other embedded hardware shall be properly secured to sheathing or others so that they will not move during concrete placing.

4.2.3.5 Supports shall be erected plumb. Supports at any two vertically consecutive floors shall be erected as near as possible to identical locations on a common plane.

4.2.3.6 Shoring shall be erected paying special attention to safety.

4.2.3.7 If sheathing is reused, the surface in contact with the concrete shall be thoroughly cleaned off and sufficiently repaired before reuse. In case of using for fair-faced concrete, the same sheathings shall be used twice after approval of the Consultant.

4.2.4 Inspection

4.2.4.1 Formwork shall be inspected by the Consultant prior to placing of concrete.

4.2.5 Striking of forms

4.2.5.1 The minimum period for keeping the forms in position and for watering after laying the concrete shall be as stated below, except otherwise specified in drawings. Forms shall be removed in such a manner as to ensure the complete safety of the structure, so that there is no shock or vibration as would damage the reinforced concrete.

4.2.5.2 The responsibility for the safety of the concrete shall rest entirely with the Contractor and the Contractor shall be held liable for any damage done and shall have to make good the same at his own expenses.

4.2.5.3 The Contractor shall inform the Consultant when he intends to remove shuttering and shall obtain his consent, but the consent of the Consultant shall not relieve the Contractor of his responsibility.

4.2.5.4 The minimum time for formwork to remain in place shall be as per the following table.

Vertical sides of beams, slabs and columns	24 hours
Soffits of slab	10 days
Soffits of beams	21 days
Cantilevers	28 days

4.2.6 Relocation of Support

4.2.6.1 Supports under concrete shall be not relocated

4.2.7 Removal of formwork

4.2.7.1 Formwork shall be removed gently, after its removal has been approved by the Consultant.

4.2.7.2 Inspection by the Consultant shall be obtained immediately after the removal of sheathing and defects shall be immediately remedied according to instruction of the Consultant.

4.2.7.3 After shoring has been removed, members shall be carefully observed for cracking and deflection, when found, they shall be reported immediately to the Consultant.

5. STEEL REINFORCEMENT

5.1 Material

5.1.1 Reinforcing steel shall be of the dimensions given in the Drawings.

5.1.2 Reinforcing bars shall comply with the requirement of B.S.4449. and welded wire fabric, square bar fabric and expanded metal shall comply with appropriate part of B.S.4483.

5.1.3 Dia 6mm reinforcing steel shall be round mild steel bars, and 12mm, 16mm, 20mm and 25mm shall be deformed high strength bars.

5.1.4 Any other non-specified reinforcing steel shall be used only with the approval of the Consultant.

5.1.5 All reinforcing steel and binding wire shall be stored under cover and shall be at least 250mm above the ground.

5.2 Cleaning

5.2.1 Reinforcing bars shall be cleaned before use so that it is free from rust, oil, dirt or other coatings that reduce bond.

5.3 Bending and Laps

5.3.1 The reinforcement shall be bent cold in an approved bar bending machine.

5.3.2 Preferably bars of full length shall be used. Lapping of bars where necessary shall conform to BS1487 'Bending Dimensions of Bars of Concrete reinforcement.'

5.4 Reinforcement Cover

5.4.1 Concrete cover for reinforcement shall be as follows:

FOR ANY STEEL IN UNDER GROUND CONRETE	50	MM
CLEAR COVER IN SLABS	25-30	MM
CLEAR COVER IN BEAMS SOFFIT	30-35	MM
CEAR COVER IN SIDES OF BEAMS	30	MM
CLEAR COVER IN COLUMNS	40	MM

5.5 Placing

5.5.1 Reinforcement intended for contact when passing each other shall be securely tied together with binding wire.

5.5.2 Binders and stirrups shall tightly embrace the longitudinal reinforcement to which they shall be security bound or spot welded.

5.5.3 Binding wire shall be turned in from the formwork and shall not project beyond reinforcing bars.

All reinforcement shall be inspected by the Consultant and approved before concrete is placed in the forms.

6. WATER PROOFING

6.1 Description of work

6.1.1 Extent of water proofing work is shown on drawings.

6.1.2 Install slurry type waterproofing to top surfaces of balcony slabs and external surfaces of underground concrete work.

6.1.3 Install crystalline type water proofing to underground water tanks and roof slabs in strict accordance with the approved manufacture's printed instructions.

6.2 Materials

6.2.1 Crystalline Type: Material used shall be a cementatious coating containing catalytic chemicals which migrate in to the concrete using moisture present in the concrete as the migrating medium, and which cause the moisture and the un-hydrated cement in the concrete to react causing the growth of non-soluble crystals of dendritic fibers in the void and capillary tracks of the concrete that allow passage of water, there by rendering the concrete itself water proof.

6.2.2 Acceptable products: Xypex concentrate, modified, ultra plug and quick set as manufactured Xypex chemicals (Canada) Limited (or equivalent).

6.3 Storage of materials

6.3.1 General: All materials shall be stored in original undamaged containers with manufactures seals and labels intact. Material shall be stored off the ground in a dry enclosed area.

6.4 Surface preparation

6.4.1 General: All surfaces shall be examined for form tie holes and defects such as honeycombing, rock pockets, cracks, etc. These areas shall be repaired in accordance with these specifications and the manufactures printed instructions.

6.4.2 Concrete finish: concrete surfaces shall have an open capillary system to provide tooth and suctions shall be clean; free from scale, excess form oil, laitance, curing compounds and other foreign matter.

6.4.3 Smooth surfaces or surfaces covered with excess form oil or other contaminants shall be washed lightly sandblasted, water blasted, or acid -etched with muriatic acid, as required to provide a clean absorbent surfaces.

6.4.4 Horizontal surfaces shall not be troweled or power - troweled, and shall be left with a rough float finish or a broom finish. Vertical surfaces may have a sacked finish. Comply with manufactures specifications for requirements pertaining to minimum 'age' of concrete deck surface scheduled to receive water proofing.

6.4.5 Surface moisture: Water proofing shall be applied to 'green' concrete as soon as possible after forms have been stripped or to older pours which have been thoroughly moistened with clean water prior to application. Free water shall be removed prior to application.

Mixing of crystalline water proofing compound: comply with manufactures specification for 2-coat installation.

6.5 Application

6.5.1 General: Apply all materials under the direction of the manufacturer's representative.

6.5.2 Constructions joints and surface defects: Comply with waterproofing material manufacturer's printed directions in the preparation, and treatment of construction joints and surface defects.

6.5.3 Surface application: After all repair, patching and sealing strip placement has been prepared in accordance with manufacturer's recommendations and approved by manufacturer's representative, treat concrete surface with first coat slurry mix of crystalline waterproofing compound.

6.5.4 Brushing: Use a short bristle or broom to work the slurry well into the concrete, filing all hairline cracks and surface pores.

6.5.5 Second coat: Apply second coat while first coat is still 'green' but after it has reached an initial set, all as recommended by the water proofing material manufacturer.

6.6 Curing

6.6.1 General: Curing shall begin as soon as the waterproofing materials have set up sufficiently so as not to be damaged by a fine spray. Treated surface shall be sprayed three times a day for a three-day period. Allow material to set 12 days before filling the structure with liquid

6.6.2 Protect treated surfaces from damage due to wind, sun, rain and temperatures below 35 degrees F. For a period of 48 hours after application, arrange protections to permit proper curing conditions for waterproofing material.

6.6.3 Clean up: Remove all surplus materials from the premises and leave all areas broom-clean. In the case of temporary protections remove all such items carefully to avoid damage to treated surfaces. Assemble all such materials and remove from premises followed by broom cleaning as noted.

7. EMBEDDED DAMPPROOF MEMBRANE

7.1 General

7.1.1 This section deals with laying of flexible sheet as damp proof membranes or has chemical or vapour barriers embedded in the fabric of the building. It does not deal with the weather-proof roof sheeting, or with vapour barriers.

7.2 Products

7.2.1 Polythene sheets for under slab DPM: gauge 500, manufacturer and reference to approval.

7.2.2 Adhesive tape: A type recommended by the sheet manufacturer.

7.3 Workmanship

7.3.1 Manufacturers Recommendations: to be strictly followed for all products and materials. Apply sheets to clean, dry surfaces with all joints sealed to give a completely water proof continues membrane.

7.3.2 Polythene Sheet Under-Slab Dpm: lay a level bed of fine sand, not less than 13mm thick or as specified to receive membrane.

7.3.3 Polythene Sheet Dpm: ensure that sheets are clean and dry. Lay single layer loose on base, lap edges 150mm and seal with mastic or adhesive tape.

7.3.4 Pipe Etc: where pipe etc. pass through sheeting make junction completely watertight by forming collars fully bonded / sealed to both pipes and sheeting.

7.3.5 Project: finished sheeting adequately and prevent puncturing during following work sheet to be covered by permanent over laying construction as soon as possible.

8. STRUCTURAL STEEL

8.1 Scope

8.1.1 This section shall apply to the work involved with structural steels. All incidental items of structural steel shall be stated in the particular specification.

8.2 Materials

8.2.1 Steel

8.2.1.1 Shape of steel shall be precise and straight and free of injurious scratches and rust.

8.2.1.2 All steel sections shall be galvanized sections of strength class 43 A.

8.2.1.3 Dimensions of steel section and tolerance of dimension shall conform to standard dimension of steel regulated in ASTM or BS standard.

8.2.2 Bolt

8.2.2.1 Shape of bolt, nut, and washer shall be in accordance with requirement of BS 4190 & BS 3692.

8.2.2.2 Quality of bolt shall be SC 43 A.

8.2.3 Welding Rod

8.2.3.1 Arc welding rod shall conform to materials to be welded, and position.

8.3 Fabrication

8.3.1 Main fabrication shall be done in workshop unless otherwise specified or approved by the Consultant.

8.3.2 Full scale drawing of each section shall be drawn prior to fabrication and checked by the Consultant.

8.3.3 Section of each material shall be cut perpendicular to axis unless otherwise specified in the drawing.

8.3.4 Saw and angle cutter shall be used for cutting, and cut section shall be free of any noticeable defect.

8.3.5 Deformation caused by cutting shall be corrected.

8.3.6 Normal temperature or hot drawn process shall do bending process. Steel shall be red heat in hot drawn process.

8.3.7 Those directed in the drawing shall be chiselled finish and completely attached. Materials shall be checked for bend, distortion, warp, etc. before fabrication.

8.4 Bolt

8.4.1 Bolt Hole

8.4.1.1 Spacing of boltholes shall be as directed in the following table.

Diameter of Bolt	Standard Pitch	Minimum Pitch	End Distance	Edge Distance
12	50	30	30	25
16	50	40	40	30

8.4.1.2 Minimum pitch and end distance for lightweight steel shape shall be more than 3 times and 2.5 times a Bolt diameter respectively.

8.4.1.3 Diameter of hole shall not be over 0.5 mm larger than bolt diameter. However, for anchor bolt 5mm clearance shall be allowed between bolt diameter and diameter of hole unless otherwise specified.

8.4.1.4 Bolthole shall either be drilled open or reamed after sub punching. Punching can only be permitted for a material thickness less than 13 mm.

8.4.1.5 Rolled edge around a hole shall be removed.

8.4.1.6 Position of a bolthole shall be precise so that the center of all holes aligns.

8.4.2 Protection against loosing of Nuts

8.4.2.1 Nuts shall be protected against loosing by concrete covering, double nuts or other proper means.

8.5 Welding

8.5.1 Welding

8.5.1.1 Welder shall have an authorized qualification in Maldives and approved by the Consultant.

8.5.1.2 Other tests shall be conducted to confirm welder’s skill in accordance with type of work.

8.5.1.3 Tack welding shall be carried out by the welder approved by the Consultant.

8.5.2 Welding Machine

8.5.2.1 Arc welding machine shall be alternate or direct current type, which provides sufficient and adequate current.

8.5.3 Preparation

8.5.3.1 Welding shall be done as much downward as possible using a jig such as Rotary frame.

8.5.3.2 Welding rod shall be always kept in a dry area and if necessary, dried by drying equipment.

8.5.3.3 Welding surface shall be free of water, scale or others injurious to welding work. Slag appeared on the created surface in the middle of welding shall be cleaned before starting again.

8.5.4 Fabrication

8.5.4.1 Welding edge shall be smoothed by automatic gas cutting or other proper finishes.

8.5.8 Finishes

8.5.8.1 Surface of welds shall be as smooth as possible and size and length of welds shall not be less than designed dimensions.

8.5.8.2 Reinforcement of weld shall not exceed 0.1s + 1 mm (s: Designated size) in fillet welds.

8.5.8.3 Welded parts shall be free of undercut, overlap, crack, blow hole, lack of welds, and lack of weld settlement, rolled up slag or other defects.

8.5.8.4 Crater at the end of bead shall be carefully heaped up and slag, sputter, etc. shall be completely removed after welds.

8.5.9 Safety

8.5.9.1 Safe scaffoldings shall be provided for the field welds work.

8.5.9.2 Welding facilities shall be such that there shall be no electric leakage of electric shock. There also shall be sufficient protection for fire.

8.5.9.3 Electric shock protection device shall be used and also care shall be taken not to get suffocated or intoxicated by gas when welding in small area.

8.5.10 Inspection

8.5.10.1 Welding parts shall be inspected before, during and after welding in accordance with work schedule.

8.6 Erection and Field Painting

8.7.1 Erection

8.7.1.1 Erection procedure shall be prepared by the contractor and be approved by the Consultant prior to the erection.

8.7.1.2 Material shall be stored on flat surface in order not to get distortion, twist or other defects. Correction shall be made to those distortions or twisted before erection.

8.7.1.3 Horizontal reinforcement and bracing shall be placed and bolts are temporary tightened as trusses are put up.

8.7.1.4 Connection of materials by bolts, etc. shall be made after distortion on plumb is thoroughly corrected.

8.7.1.5 Temporary bracing or other reinforcement shall be placed to resist wind pressure or other loads erection.

8.7.1.6 When heavy objects are placed on a horizontal element in the course of erection, they shall be reinforced with prior approval of the Consultant.

8.7.1.7 Care shall be taken on all facilities so that there is no accident.

8.7.2 Field Painting

All steel work shall delivered to site unprimed shall be cleaned of impurities, scrapped and wire brushed to remove rust and painted with one coat of priming paint applied by brush.

Steelwork delivered to Site primed shall be cleaned of impurities and damage to the priming paint and made good with priming paint.

Galvanized steelwork to be painted shall be cleaned of impurities. Where rusting has occurred the rust shall be removed by wire brushing and made good with an approved rust inhibitor. The surfaces shall be coated with a mordant solution, washed with clean water and painted with two coats of priming paint applied by brush.

Steelwork, which is to be concealed shall be prepared and primed as above and shall be painted with two priming coats and one finishing coat of paint applied by brush.

8.8 Anchor Bolt

8.8.1 The other methods for movable burying shall be as directed by the Consultant.

9. MASONRY

9.1 Materials

9.1.1 Material used for masonry and plastering work shall conform to Section 3 - CONCRETE WORKS.

9.1.2 Masonry work shall be done with cement bricks or blocks of approved quality unless specified otherwise.

9.1.3 The blocks shall be free from excessive amounts of salt or other impurities and shall be inspected and approved by the Consultant.

9.2 General

9.2.1 Execution Drawing

9.2.1.1 Work shall be complied with this specification unless otherwise stated on particular Specification or Drawings. Any work not specified shall be discussed and directed by the Consultant. Execution drawing of block or brick alignment (inclusive of indication for hanging bolt, wood plug and conduit pipe), detail reinforcement, window opening, and other requirement shall be prepared and submitted for the Consultant.

9.2.2 Stake-Board

9.2.2.1 Stake-board shall be provided at each 5m in length and shall be inspected by the Consultant for the accuracy, firmness and secureness. However, suitable ruler, plumb bob and leveller shall be provided for minor performance of cement block and bricks.

9.2.3 Transportation and storing

9.2.3.1 Care shall be taken for damage during transportation of materials and any defect of natural finished concrete blocks or bricks shall be rejected.

9.2.3.2 Different size of material shall be stored separately and projected from dirt and other impurities.

9.2.4 Curing

9.2.4.1 Any shock or load shall not be applied until concrete mortar or other fills hardened. Corner, projection and top of cement block or brick work shall be protected from rain, dryness, cold, damage and stain by covering.

9.2.4.2 Void between blocks or bricks shall not be intruded by rainwater.

9.3 Blockwork

9.3.1 Material

9.3.1.1 Blocks shall be of standard quality low permeability blocks with no defects and sample shall be submitted for approval of the Consultant.

Blocks shall be **Solid**(For sizes refer to drawings) . The average compression strength should be not less than 2.8N/mm^2 and shall comply with physical requirements of ISO 6073: 1981

9.3.2 Horizontal reinforcement for concrete block wall;

9.3.2.1 Horizontal reinforcement shall be provided at end of wall adjoining to concrete column. Reinforcing bar shall be anchored into end block and column.

9.3.2.2 Horizontal reinforcing bar for block wall shall be 6 dia. @ 1000 mm.

9.3.3 Placing Blocks & Bricks

9.3.3.1 Cement blocks shall be saturated with water and joint shall be cleaned.

9.3.3.2 Bonding mortar shall be used immediately after mix, and mixed mortar left for more than one hour shall be rejected.

9.3.3.3 Vertical and horizontal joint of blocks shall be filled completely and suitable with mortar on line shall not be moved or rearranged. Joint and surface of block of exposed finished block wall shall be cleaned immediately after joint is filled.

9.3.3.4 In case concrete block wall is attached to structural concrete, block wall shall be placed before concreting structure.

9.3.3.5 Mortar for joint shall be touched with steel trowel before hardened and exposed joint shall be finished with uniform width and planned without roughness or cavity.

9.3.3.6 Height for placing block per day shall be maximum 1.2 m unless otherwise specified.

9.3.3.7 Blocks shall be placed with cavity side under.

9.3.4 Joints

9.3.4.1 The thickness of joints shall not exceed 10 mm and the joints shall be rated (13 mm dup.) when the mortar is still floor, so as to provide for proper bond for the plaster. Any mortar which falls on the floor from this joints or removed due to raking of joints shall not be reused.

9.3.5 Lintel

9.3.5.1 Lintel shall be reinforced concrete as approved or directed by the Consultant.

9.3.5.2 Main reinforcing bar shall be anchored more than 40D (40 x diameter of the bar) at both end.

9.3.5.3 In case lintel is prefabricated, shop drawing shall be submitted for approval of the Consultant.

9.3.6 Frame of Opening

9.3.6.1 In case frame is temporarily installed before placing of blocks, frame shall be firmly placed and joiner shall be bonded with mortar as placing each block at side and top of frame.

9.3.6.2 In case frame is installed after placing of blocks, joiner shall be bonded with additional mortar at space or every two blocks or more.

9.3.6.3 Back of frame shall be filled and compacted with mortar by providing shuttering board.

9.3.6.4 Wood plug and anchor bolt shall be covered with mortar or concrete.

9.3.7 Piping

9.3.7.1 Principally, piping shall not be placed in block wall unless piping block is in use.

9.3.7.2 In case electric conduit pipe is placed in cavity of concrete blocks, care shall be taken not to obstruct reinforcing bar, and cavity shall be completely filled.

9.3.7.3 In case chipping and piping on face of blocks is unavoidable, performance shall confirm to instruction of the Consultant.

9.3.7.4 Joiner and supporter for exposed piping shall be buried at joint which back is filled or otherwise approved by the Consultant.

10. PLASTERING

10.1 General

10.1.1 All masonry walls shall have smooth finished cement plaster on both sides with a surface setting coat of neat cement applied within an hour of the completion of rendering.

10.1.2 Cement rendering to floor shall be same as above.

10.2 Materials and Storage

10.2.1 Plaster materials which are affected by moisture such as plaster and cement shall be stored properly.

10.2.2 Materials used for plastering shall conform to those of Section 3 - Concrete Works. Grading of sand, however, shall be as in table below

Grading of sand	Mortar plastering	Plastering
5mm sifting thorough 100% 0.15mm sifting less than 10%	for first coat for finish coat	for first coat and dubbing out
2.5mm sifting through 100% 0.15mm sifting less than 10%	for finish coat	for second coat

10.2.3 White cement or filler or similar shall confirm to the requirements of Portland cement, BS.12.

10.2.4 The use of mixtures shall be approved by the Consultant's representative. The amount of admixture shall be such that it affects mortar strength very little.

10.3 Mixing ratio

10.3.1 Mixing volume ratio of mortar shall be as in table below:

Base	area of application	first coat cement:sand	Dabbing out cement:sand	Finish coat cement:sand
Masonry blocks	Floor	-	-	1:4
	Interior wall	1:4	1:4	1:4
	Exterior wall	1:4	1:4	1:4

10.4 Thickness of Coating

Standard thickness of coating (mm)

Base	Area of application	First coat	Dubbing out	Second coat	Finish coat	Total
Masonry block	Floor	-	-	-	as per dwg	as per dwg
	Interior wall	8	-	8	4	15
	Exterior wall	8	-	8	4	15

Thickness of coating shall be standard thickness of coating unless otherwise indicated on the Drawings.

10.5 Finish

10.5.1 Type of finish and work schedule

Type	Work Schedule	Notes
1.Smooth Trowel finish	1. Shall be applied flat by metal trowel 2. Shall be finished by pressing with the trowel.	Before applying second coat, corner and edge shall be screed well.
2. Wooden float finsh	Shall be applied by wooden float	

10.6 General Preparation

10.6.1 Remove efflorescence, laitance, dirt and other loose material by thoroughly dry brushing.

10.6.2 Remove all traces of paint, grease, dirt and other materials incompatible with coating by scrubbing with water containing detergent and washing off with plenty applying coatings unless specified otherwise.

10.6.3 In-situ Concrete Surfaces: Scrub with water containing detergents to ensure complete removal of mould oil, surface retarders and other materials in compatible with coating . Rinse with clean water and allow to dry unless specified otherwise.

10.6.4 Organic Growths: Treat with fungicide to manufacturer's recommendations and bush off.

10.6.5 Hacking for Key: roughen specified surfaces thoroughly and evenly by removing the entire surface to a depth of 3mm by scabbling, bush hammering or abrasive blasting, clean surfaces by washing and brushing.

10.6.6 Smooth Concrete Surfaces: where no keying or mix or bonding agent is specified, wet smooth concrete surfaces immediately before plastering.

10.7 External Plastering

10.7.1 Dissimilar Solid Backgrounds for Plastering: where plaster is to be continued without break across joints between dissimilar solid backgrounds which are rigidly bonded together, cover the joints with a 200mm wide mesh strip (back grounds in the same plane) or with the corner mesh (internal angle) fixed at not more than 600mm centers along both edges , unless specified or otherwise.

10.7.2 Dissimilar Solid Backgrounds for Plaster: where plaster is to be continued without break and without change of plane across the face of a 300mm and rigidly bonded to the background.

10.7.2.1 Cover the face of the column /beam/ lintel with building paper extending 25 mm on the adjacent background.

10.7.2.2 Over lay with expanded metal lathing extending 50mm beyond the edges of the paper and securely fixed with masonry nails at not less than 100mm centres along both edges.

Alternatively, an approved paper and mesh lathing may be used.

10.7.3 Dissimilar Solid Backgrounds for Rendering: where rendering is to be continued without break across joints between dissimilar solid backgrounds which are in the same plan and rigidly bounded together, cover joints with a 150mm wide strip of building paper overlaid with 300mm wide metal lathing fixed at not more than 600mm centers along both edges unless specified otherwise.

10.7.4 Service Chases: cover with steel mesh strip fixed at not more than 600mm centers along both edges.

10.7.5 Conduits bedded in under coat to be covered with 90mm wide jute scrim budded in finishing coat mix, pressed flat and trowelled in. Do not lap ends of scrim.

10.8 Internal Plastering

10.8.1 Accuracy of plaster 15mm thick or more: maximum permissible gap between an 1800mm straight edge and any point on the surface to be 3mm.

10.8.2 Dubbing Out: if necessary to correct inaccuracies, dub out in thickness of not more than 10mm in same mix as first coat. Allow each coat to set before the first is applied . Cross scratch surface of each dubbing out coat immediately after set.

10.8.3 Metal Mesh Lathing: Work undercoat well in to interstices to obtain maximum key.

10.8.4 Under Coats: generally to be not less than 8mm with thickness greater than 16mm applied as two equal coats. Rule to an even surface and cross scratch - end coat to provide a key for the next hand applied coat.

10.8.5 Cement Based Under Coats: all to dry out thoroughly but not rapidly, to ensure that drying shrinkage is substantially complete before applying next coat.

10.8.6 Dissimilar Backgrounds: where scrim or lathing or beads are not specified, cut through plaster with a fine blade in a neat, straight line at junctions of :

10.8.6.1 Plastered rigid sheet and plastered solid backgrounds.

10.8.6.2 Dissimilar solid backgrounds.

10.8.7 Smooth Finish: trowel or float to product a tight matt, smooth surface with no hollows abrupt change of level or trowel marks. Do not use water brush and avoid excessive trowelling and over polishing.

10.9 External Rendering

10.9.1 Dubbing Out: if necessary to correct inaccuracies, dub out in thicknesses of not more than 10mm in same mix as first coat. Allow each coat to dry before the next is applied. Cross scratch surface of each dubbing out coat immediately after set.

10.9.2 Under Coats for hand applied finishes:

10.9.2.1 Apply first undercoat or dubbing out coat by throwing from a trowel.

10.9.2.2 Coats to be no less than 8mm thick, with thickness greater than 16mm applied as two equal coats. On weak backgrounds first under coat to be not less than 10mm thick.

10.9.2.3 Brush down each under coat to remove dust and loose particles and wet thoroughly before application of next coat.

10.9.2.4 Cross scratch under coat without penetrating the coat, to provide key for following coat(s).

Drying: Keep each coat damp for the first three days by covering with polythene sheet and/or spraying with water. Thereafter prevent from drying out too rapidly. Work in shade whenever possible.

Allow each coat to dry out thoroughly to ensure that drying shrinkage is substantially complete before applying next coat.

Playing Floated Finish: Finish with wood or other suitably faced float to give an even texture.

Do not draw excessive laitance to surfaces.

10.10 Metal Mesh Lathing / Reinforcement For Plastered/Coatings.

10.10.1 Lathing to be provided as reinforcement for plastering in columns, walls or specified in drawings products.

10.10.2 Products:

10.10.2.1 Plain Expanded Metal Lathing: To B.S 1369 with a minimum weight of 1.9 kg/mm^2. Manufacturer to approval of the Consultant.

10.10.2.2 Wire Ties: Unless other specified, annealed iron, galvanized to B.S 443.

10.10.2.3 Clout Nails: galvanized steel or stainless steel nails to B.S 1202: Part 1, table 3.

10.10.2.4 Staples: Galvanized steel wire staples to B.S 1494: Part 2.

10.10.3 Workmanship

10.10.3.1 Framing: fix securely and accurately to help ensure that coatings on lathing , when finished, are true to line and level , within specified tolerances and free from cracks, rippling, hollows, ridges and sudden changes of levels.

10.10.3.2 Runners/Bearers spanning between concrete beams/ribs: fix with 3mm wire ties twisted around 38 mm X 10 gauge screws driven well into fixing blocks or plugs in sides of beams/ribs.

10.10.3.3 Wire Ties: twisted ends tightly together, cut off surplus and bend ends of wire away from face of coating.

10.10.3.4 Plain Expanded Metal Lathing:

(a) Stretch lathing and fix securely in accordance with manufacturers recommendations to give a taut, firm base for plaster/ rendering.

(b) Fix with the long way of the mesh at right angles to supports and with all strands sloping in the same direction.

(b) Lap side edges not less than 25mm. Lap ends 50mm at supports and 75mm between supports. Laps must not occur within 100mm of angles or bends.

11. CARPENTRY AND JOINERY

11.1 Materials

11.1.1 Timber shall be in accordance with the requirements of BS 1186 'Quantity of Timber and Workmanship in Joinery', Part 1, 'Quality of Timber'.

11.1.2 Timber and timber products shall be subject to the inspection and approval of the Consultant.

11.1.3 Timber shall be seasoned to stable moisture content compatible with the finished use, straight and true and free from wind, warp and distortion and in lengths suitable for the members required.

11.1.4 All timber shall be in long lengths and laps, scars or splices shall be over a bearing surface. Where obtainable, finishing timber exposed to view shall be in single lengths.

11.2 Preservation of Timber

11.2.1 All timber shall be treated for insect attack and is to be of the correct moisture content and free from surface moisture content and dirt.

11.2.2 All rafters, purlins, framing scribe pieces, wall plates, and trusses etc. shall be treated for insect attack with approved timber preservative. No extra payment shall be made for such coating and will be considered inclusive in the rate of the respective item in the BOQ.

11.2.3 Treatment shall be carried out after all cutting and shaping is completed.

11.3 Hardware

11.3.1 Hardware shall be standard quality and samples shall be submitted to the Consultant for approval.

11.3.2 All hinges shall be stainless steel or brass and shall be approved by the Consultant.

11.3.3 The dimensions and quality of hardware shall meet the requirements and shall not be rested, deformed or defective.

11.4 Dimensions and Finish

11.4.1 All dimensions of timber given are finished dimensions.

11.4.2 All elements and others of structural nature, which are exposed, must be machine planed to a smooth finish.

11.4.3 All unexposed timber shall be machine planed to a rough finish.

11.4.4 All joinery work shall be dressed on all four sides and hand dressed where necessary and sanded to all exposed surfaces. All arises in any way accessible shall be sanded and smoothed off.

11.5 Workmanship

11.5.1 All connections whether nailed, screwed glued, mortised or dove-tailed shall be accurately made and properly executed to provide sound, satisfactory connections for the class of work required.

11.5.2 Timbers containing defects or distortions shall not be used.

11.5.3 All joinery shall be manufactured by skilled tradesman with accurate tolerances and set out and with tools, jigs, machines and equipment appropriate for the work.

11.5.4 Assembly of the joinery units and joinery frames, etc. shall be by means of glued connections appropriate to the work - mortise and tennon, housing and doweling, etc. where practicable including the use of glued blocks wherever required. Nailing, screwing shall only be used with prior approval of the Consultant; corrugated fasteners shall not be used for effecting connections.

12. ALUMINIUM DOORS AND WINDOWS

12.1 Aluminium Doors and Windows

12.1.1 All windows and doors are to be constructed by approved specialist suppliers of medium section to the particular requirements noted on the drawings as to weight and profile. All sections shall generally conform to relevant British Standard Specifications.

12.1.2 All frames should be made to fit the actual openings with a 3 mm clearance all around. Discrepancies in overall width or height exceeding 3mm will not be allowed and the frames will be rejected in such cases. Any small discrepancies shall have the gaps suitably backed and filled with gun-applied water repellent mastic sealant

12.1.3 All sealants used in the assembly of, and in the fixing of cladding and window framing, shall be non-setting to allow thermal movement without detriment to those joint sealants used for peripheral caulking and shall be one part silicone sealant and shall conform to BS 4245. All spliced joints between mullions should be sealed with an approved silicone product, compatible with other sealants and packings used.

12.1.4 The auxiliary components in sashes as locks, pivots, sliding gear etc. shall comprise of stainless steel or resisting materials.

12.1.5 The tolerances are to be as follows:

a) Inside width of frame	3mm Maximum
b) Inside height of frame	3mm Maximum
c) Depth of frame	2mm Maximum
d) Opposite side, Inside distance	2mm Maximum

12.1.6 The performance - associated requirements are

1) Strength (resistance to wind pressure and other forces applied in use)
2) Air tightness or ability to cut out drafts.
3) Water - tightness against rain or dew.
4) Sound arresting effect to (shut off noise from outside as well as inside).

12.1.7 All surfaces shall have an anodized protective surface layer of minimum 60 Micron thickness.

12.1.8 Glazing shall be done as specified by the Consultant. Glass shall be tinted, or as specified in the drawings. Thickness shall be according to the size of panels as given hereunder.

Not exceeding 1 sq. ft.	2mm
Exceeding 1 sq. ft. but not exceeding 2 sq. ft.	3mm
Exceeding 2 sq. ft. but not exceeding 4 sq. ft.	4mm
Exceeding 4 sq. ft. but not exceeding 6 sq. ft.	5mm
Exceeding 6 sq. ft. but not exceeding 12sq. ft.	6mm
Exceeding 12sq. ft.	> 8mm or as approved by consultant

12.1.9 Prior to import and / or purchase of the Aluminium Doors and Windows, the relevant specification of the manufacturer, along with samples has to be submitted to the Consultant for approval. This clause shall not be contravened on any account.

12.1.10 The fitting shall be done with utmost care not to spoil the finishes given by the manufactures, and any cleaning done shall be done with cleaners etc. as specified by the Manufactures.

11.1.11 The Contractor shall provide all items, articles, materials, operations, mentioned, or scheduled on the drawings, including all the labour materials, including fixing devices, equipment and incidentals necessary as required for their completion.

12.1.12 The Contractor shall submit shop drawings and/or samples of each type of doors, windows, railings and other items of metal work to the Consultant for approval. The shop drawings shall show full size sections of doors and windows etc. thickness of metal, details of construction hardware as well as connection of windows, doors and other metal work to adjacent work.

12.1.13 Aluminium doors and shutters shall be manufactured by an approved manufacturer and shall be of sections, sizes combination and details shown on the drawings. The frame member shall be one piece, corners shall be electrically welded, ground smooth and true and glazing bare shall be threaded or interlocked as approved by the Consultant.

12.1.14 Glazing for doors and windows shall be of specified thickness and of approved quality and shall conform to specification of glazing. Fixing for glazing shall be done with aluminium Snap-On beading as per detail drawing and instructions. Necessary continuous rubber gaskets of approved make shall be provided.

12.1.15 Colour for doors and windows shall be approved by the Consultant.

12.2 Aluminium louvers

12.2.1 Product data shall be submitted for approval; this shall include specified model and AMCA ratings or equivalent.

12.2.2 Contractor shall submit all shop drawings indicating materials, construction, dimensions, accessories, and installation details.

12.2.3 Contractor shall submit samples of the product for approval.

12.2.5 Louvers shall comply with AAMA specification 2605 “Voluntary Specification for High Performance Organic Coatings on Architectural extrusions and panels”, ASTM B244 -68, AAC22A41 or equivalent.

12.2.6 Louvers shall be well suited for the design environment (temperature, humidity, and ventilation); i.e., it shall be within manufacturer’s recommended design environment limits for optimum results.

12.2.7 All louvers shall be installed according to manufacturer’s instructions.

12.2.8 All units shall be installed plumb, well fitted and securely attached to supporting frames.

12.2.9 Delivery of materials to site in shall be in manufacturers’ original, unopened containers and packaging with labels clearly indicating manufacturer, material and location of installation.

12.2.10 Materials shall be stored in a dry area indoors and protected from damage in accordance with manufacturer’s specifications.

12.2.11 Materials and finishes shall be protected during handling & installation to prevent damage.

12.3 Top hung windows, ventilators and side hung doors

12.3.1 All windows and doors should be weather stripped. The weather protection should be achieved by a positive compressive action against the section and should not depend on external contact. At every contact between two profiles two weather stripping sections should be provided to complete weather protection.

12.3.2 The bottom section for hinges must be capable of being adjusted vertically if necessary. The gap between section and the floor should be covered with a pair of special splay-tube sections.

12.3.3 The shutter sections for both windows as well as doors shall be hollow section type and shall be overall size 57 x 45 mm and the door sections shall be overall size 81 x 45 mm (including flanges).

12.3.4 The shutters of the windows and doors should be assembled with stainless steel pins and nylon washers. Handles shall be anodised aluminium finished to match the aluminium sections and mounted with self-lubricating nylon washers.

12.3.5 A mortise cylinder rim automatic deadlock of high quality with double pin tumbler shall be used.

12.3.6 Windows shall have anodised aluminium handles, colour as framing and a latching mechanism securing the shutter to the frame both at the top and bottom.

12.3.7 Required fittings;

12.3.7.1 Single action door closer concealed in the head bar of the outer frame and mounted on an adjacent pivot at the threshold and deadlock fitted.

12.3.7.2 The left hand leaf of double doors with flush bolts at head and sill with deadlock fitted to the right hand leaf.

12.3.7.3 Escape doors to have panic bolts assembly with vertical elements concealed in the sill and door closer as in 12.3.7.1.

12.4 Installation

12.4.1 Aluminium work shall be installed adjusted and glazed by experienced workmen all in accordance with the manufacturer's installation instructions and in full conformity with the approved shop drawings, samples and other submitted data. Under no circumstances shall materials be installed on surfaces that contain condensation, dirt, grease or other foreign encountered materials that would hinder or prevent proper installation and functioning for the use intended.

12.4.2 Aluminium work shall be carefully and accurately assembled with proper and approved provision for contraction and expansion and set in correct locations as per approved detailed shop drawings, all level, square, plumb and aligned with other work. All joints between framing and structural building shall be sealed in order to be watertight and weather-proof and to satisfy all other requirements of the Consultant.

12.4.3 Frames shall be designed and manufactured with a maximum 2.5mm tolerance around the opening in the structure. These joints are to be finished by applying an approved sealant into a polystyrene foam backing strip.

12.4.4 All aluminium works are to be fully protected for the duration of the contract from damage by other trades. The Consultant shall approve the method of protection.

12.4.5 If for any reason final finishes become scratched, abraded or damaged during transport, delivery, storage or erection, it shall be the Contractor's responsibility to remove or repair those defective areas or components as directed and to the complete satisfaction of the Consultant.

12.4.6 Repair work shall be identical to the manufacturer's applied finish with regard to gloss, finish and visual appearance. Field touch up of painted aluminium is permitted only with the written permission of the Consultant. Where touch up is not an authorised means of repair the damaged materials must be replaced by new.

12.4.7 Upon completion of work all protective coverings from all exposed surfaces shall be removed. All surfaces shall be cleaned using soap or detergents as recommended by the aluminium manufacturers to remove sealants, discolouration and any other foreign material. Defection of any type determined by the Consultant shall be repaired at the Contractor's expense.

12.4.8 Extreme care shall be taken when cleaning the exterior portion to protect all other adjacent works.

12.5 Sealing joints

12.5.1 The Contractor shall ensure that joints are dry and remove all loose material, dust and grease.

12.5.2 Joints shall be prepared in accordance with sealant manufacturer's recommendations using recommended solvents and primers where necessary.

12.5.3 Adjoining surfaces which would be impossible to clean if smeared with sealant shall be masked.

12.5.4 Backing strips shall be inserted in all joints to be pointed with sealant. When using backing strips, the Contractor shall not leave gaps and shall not reduce depth of joint for sealant to less than the minimum recommended by the manufacturer.

12.5.5 Cavities shall be filled and jointed with sealant in accordance with the manufacturer's recommendations. Sealant shall be tooled to form a smooth flat bead.

12.5.6 Excess sealant shall be removed from adjoining surfaces using cleaning materials recommended by the sealant manufacturer, and shall be left clean.

12.6 Glass installation

12.6.1 Workmanship shall generally be in accordance with CP 152 and respective British Standards.

12.6.2 The glass is to be delivered to the site with adequate protection to prevent damage and where possible it is to be fixed in position immediately after delivery. When fixed the Contractor is to take all necessary precautions to prevent damage during succeeding building operations and will be entirely responsible for the replacement of any broken or damaged glass at his own cost.

12.6.3 The Contractor is to be solely responsible for determining the exact sizes of glass required, including a tolerance of 2mm to each edge and he is recommended to check the necessary dimensions on site.

12.6.4 No glazing is to be carried out until rebates have been painted with primer. Glazing beads as applicable are also to be primed before fixing.

12.6.5 All mastic is to be neatly struck off to agree exactly with site lines inside and out.

12.6.6 Rates are to include for all necessary springs, clips, setting blocks, location blocks and distance pieces and for taking off and later re-fixing loose beads

12.6.7 Glass apertures in timber doors are to be bedded in chamois leather glazing strip, black ribbon velvet or P.V.C. glazing strip to the approval of the Consultant.

13. METAL WALL PANELS

13.1 References

13.1.1 General: Standards listed by reference, including revisions by issuing authority, form a part of this specification section to the extent indicated. Standards listed are identified by issuing authority, authority abbreviation, designation number, title or other designation established by issuing authority. Standards subsequently referenced herein are referred to by issuing authority abbreviation and standard designation.

A. ASTM International:

1. ASTM D1781 Standard Test Method for Climbing Drum Peel for Adhesives.
2. ASTM D1929 Standard Test Method for Determining Ignition Temperature of Plastics.
3. ASTM E84 Standard Test Method for Surface Burning Characteristics of Building Materials.
4. ASTM E108 (Modified) Standard Test Methods for Fire Tests of Roof Coverings.
5. ASTM E119 Standard Test Methods for Fire Tests of Building Construction and Materials.
6. ASTM E283 Standard Test Method for Determining the Rate of Air Leakage Through Exterior Windows, Curtain Walls, and Doors Under Specified Pressure Differences Across the Specimen.
7. ASTM E330 Standard Test Method for Structural Performance of Exterior Windows, Curtain Walls, and Doors By Uniform Static Air Pressure Difference.
8. ASTM E331 Standard Test Method for Water Penetration of Exterior Windows, Curtain Wall, and Doors By Uniform Static Air Pressure Difference.

B. American Architectural Manufacturers Association (AAMA):

1. AAMA 2605 Voluntary Specification, Performance Requirements and Test Procedures for Superior Performing Organic Coatings on Aluminum Extrusions and Panels.

B. International Organization for Standardization (ISO):

1. ISO 9001-2000 Quality Management Systems - Requirements.

D. National Fire Protection Association (NFPA)

1. NFPA 285 Standard Fire Test Method for Evaluation of Fire Propagation Characteristics of Exterior Non-Load-Bearing Wall Assemblies Containing Combustible Components

13.2 System Description

13.2.1 Performance Requirements: Provide composite metal panels that have been manufactured, fabricated and installed to withstand loads from deflection and thermal movement and to maintain performance criteria stated by manufacturer without defects, damage or failure.

A. Water and Air Leakage: Provide systems that have been tested and certified to conform to the following criteria:

1. Air Leakage, ASTM E283: Not more than 0.06 cfm per ft2 of wall area (0.003 (L/s m2) when tested at 1.57 psf (0.075 kPa).

2. Water Penetration: No water infiltration under static pressure when tested in accordance with ASTM E331 at a differential of 10% of inward acting design load, 6.24 psf (0.299 kPa) minimum, after 15 minutes.

a. Water penetration is defined as the appearance of uncontrolled water in the wall.

b. Wall design shall feature provisions to drain to the exterior face of the wall any leakage of water at joints and any condensation that may occur within the construction.

B. Fire Performance: Provide composite fire rated panels that have been evaluated and are in compliance with regulatory code agency requirements specified herein.

13.3 Submittals

13.3.1 General: Submit listed submittals in accordance with Conditions of the Contract.

13.3.2 Product Data: Submit product data, including manufacturer’s SPEC-DATA sheet, for specified products.

A. Shop Drawings: Submit shop drawings showing layout, profiles and product components, including anchorage, accessories, finish colors and textures.

1. Include details showing thickness and dimensions of the various system parts, fastening and anchoring methods, locations of joints and gaskets, and location and configuration of joints necessary to accommodate thermal movement.

B. Samples: Submit selection and verification samples for finishes, colors and textures.

1. Selected Samples: Manufacturer’s color charts or chips illustrating full range of colors, finishes and patterns available for composite metal panels with factory applied finishes.

2. Verification Samples:

2.1. Structural: 12 inch × 12 inch (305 × 305 mm) sample composite panels in thickness specified from an available stock color, including clips, anchors, supports, fasteners, closures and other panel accessories, for assembly approval. Include panel assembly samples not less than 24 inches × 24 inches (610 × 610 mm) showing 4-way joint.

2.2. Include separate sets of drawdown samples on aluminum substrate, not less than 3 inches × 5 inches (76 × 127 mm), of each color and finish selected for color approval. Larger samples of standard colors are available with production-applied coatings.

C. Quality Assurance Submittals: Submit the following:

1. Test Reports: Certified test reports showing compliance with specified performance characteristics and physical properties, or a third party listing documenting compliance to a comparable code section.

2. Certificates: Product certificates signed by manufacturer certifying materials comply with specified performance characteristics and physical requirements.

3. Manufacturer's Instructions: Manufacturer’s installation instructions.

4. Manufacturer’s Field Reports: Manufacturer’s field reports.

D. Closeout Submittals: Submit the following:

1. Warranty: Warranty documents specified.

13.4 Quality Assurance

13.4.1 Qualifications:

1. Installer Qualifications: Installer experienced in performing work of this section who has specialized in the installation of work similar to that required for this project.
    a. Certificate: When requested, submit certificate indicating qualification.
2. Manufacturer Qualifications: Company with a minimum of 5 years of continuous experience manufacturing panel material of the type specified:
    a. Able to provide specified warranty on finish.
    b. Able to provide a list of 5 other projects of similar size, including approximate date of installation and name of Architect for each.
    c. Able to produce the composite material without outsourcing of the coating or laminating process.
    d. Able to provide a certificate of registration to ISO 9001-2000.

3. Fabricator Qualifications: Company with at least 3 years of experience on similar sized metal panel projects and qualified by panel material manufacturer. Capable of providing field service representation during construction

13.4.2 Mock-Ups: Install at project site a job mock-up using acceptable products and manufacturer approved installation methods. Obtain Owner's and Architect's acceptance of finish color (drawdown samples to be used for color approval of nonstandard coil coated colors), texture and pattern and workmanship standard. Comply with Division 01 Quality Control, Mock-Up Requirements Section.

1. Mock-Up Size: to be proposed by contractor
2. Maintenance: Maintain mock-up during construction for workmanship comparison; remove and legally dispose of mock-up when no longer required.
3. Incorporation: Mock-up may be incorporated into final construction upon Owner's approval.

13.4.3 Pre-installation Meetings: Conduct pre-installation meeting to verify project requirements, substrate conditions, manufacturer's installation instructions and manufacturer's warranty requirements. Comply with Division 01 Project Management and Coordination, Project Meetings Section.

13.5 Delivery, Storage & Handling

13.5.1 General: Comply with Division 01 Product Requirements Sections.

13.5.2 Ordering: Comply with manufacturer's ordering instructions and lead time requirements to avoid construction delays.

13.5.3 Delivery: Deliver materials in manufacturer's original, unopened, undamaged containers with identification labels intact.

1. Protection: Protect finish of panels by applying heavy-duty removable plastic film during production.
2. Delivery: Package composite wall panels for protection against transportation damage. Provide markings to identify components consistently with drawings.
3. Handling: Exercise care in unloading, storing and installing panels to prevent bending, warping, twisting and surface damage.

13.5.4 Storage and Protection: Store materials protected from exposure to harmful weather conditions and at temperatures recommended by manufacturer.

1. Storage: Store panels in well-ventilated space out of direct sunlight.
    a. Protect panels from moisture and condensation with tarpaulins or other suitable weather tight covering installed to provide ventilation.
    b. Slope panels to ensure positive drainage of any accumulated water.
    c. Do not store panels in any enclosed space where ambient temperature can exceed 120 degrees F (49 degrees C).
2. Damage: Avoid contact with any other materials that might cause staining, denting or other surface damage.

13.6 Project Conditions

13.6.1 Field Measurements: Verify actual measurements/openings by field measurements before fabrication; show recorded measurements on shop drawings. Coordinate field measurements, fabrication schedule with construction progress to avoid construction delays.

13.7 Warranty

13.7.1 Project Warranty: Refer to Conditions of the Contract for project warranty provisions.

13.7.2 Manufacturer's Warranty: Submit, for Owner's acceptance, manufacturer's standard warranty document executed by authorized company official. Manufacturer's warranty is in addition to, and not a limitation of, other rights Owner may have under the Contract Documents.

1. Warranty Period:
    - a. Panel Integrity: 10 years commencing on Date of Substantial Completion.
    - b. Finish: 10 years commencing on Date of Substantial Completion.

PRODUCTS

13.8 Composite Fire resistive metal panels

13.8.1 Manufacturer: Mitsubishi Plastics Composites America, Inc.

13.9 Product Substitutions

13.9.1 Substitutions: No substitutions permitted.

13.10 Composite Metal Panel Materials

13.10.1 ALPOLIC/fr Composite Fire Resistive Metal Panels:

1. Panel Thickness: 4 mm.
2. Core: Thermoplastic core material with inorganic fillers that meets performance characteristics specified when fabricated into composite assembly.
3. Face Sheets: Aluminum alloy 3105 H14 and as follows:
    - a. Coil coated with a fluoropolymer paint finish that meets or exceeds values expressed in AAMA 2605 where relevant to coil coatings.
    - b. Spray coated with specified finish (quantities less than 7500 ft2 (700 m2)).
4. Bond Integrity: Tested for resistance to delamination as follows:
    - a. Peel Strength (ASTM D1781): 22.5 in-lb/in (100 N-m/m) minimum.
    - b. No degradation in bond performance after 8 hours of submersion in boiling water and after 21 days of immersion in water at 70 degrees F (21 degrees C).
    - c. Thermally bonded to the core material in a continuous process under tension.
5. Fire Performance:
    - a. Flamespread, ASTM E84: <25.
    - b. Smoke Developed, ASTM E84: <450.
    - c. Surface Flammability, Modified ASTM E108: Pass.
    - d. Ignition Temperature:
        - 1) Flash, ASTM D1929: 716 degrees F (380 degrees C).
        - 2) Ignition: 752 degrees F (400 degrees C).
    - e. Flammability, Exterior, Non-load-bearing wall assemblies and panels, NFPA 285: Pass.
6. Product Transparency:
    - a. Provide a Product Transparency Declaration (PTD) for the Composite metal panels

13.10.2 Production Tolerances:

1. Width: +/- 2.0 mm.
2. Length: +/- 4.0 mm.

3. Thickness (4 mm Panel): +/- 0.008 inch (0.2 mm).
4. Thickness (6 mm Panel): +/- 0.012 inch (0.3 mm).
5. Bow: Maximum 0.5% length or width.
6. Squareness: Maximum 0.2 inch (5.1 mm).
7. Edges of sheets shall be square and trimmed with no displacement of aluminum sheets or protrusion of core material.

13.11 Accessories

13.11.1 General: Provide fabricator's standard accessories, including fasteners, clips, anchorage devices and attachments for specific applications indicated on contract documents.

13.12 Related Materials

13.12.1 General: Refer to other related sections in Related Sections paragraph specified herein for related materials, including coldform metal framing, flashing and trim, joint sealers, aluminum windows, glass and glazing and curtain walls.

13.13 Fabrication

13.13.1 General: Shop fabricate to sizes and joint configurations indicated on drawings.
1. Where final dimensions cannot be established by field measurements, provide allowance for field adjustment as recommended by the fabricator.
2. Form panel lines, breaks and angles to be sharp and true, with surfaces that are free from warp or buckle.
3. Fabricate with sharply cut edges and no displacement of aluminum sheet or protrusion of core.

13.14 Finishes

13.14.1 Factory Finish: Lumiflon-based fluoropolymer resin coating that meets or exceeds values expressed in AAMA 2605 where relevant to coil coatings.
1. Color: Prismatic Champagne ME010

13.15 Source Quality

13.15.1 Source Quality: Obtain composite panel products from a single manufacturer.

EXECUTION

13.16 Manufacturer's Instructions

13.16.1 Compliance: Comply with manufacturer's product data, including product technical bulletins, product catalog installation instructions and product carton instructions.

13.17 Examination

13.17.1 Site Verification of Conditions: Verify that conditions of substrates previously installed under other sections are acceptable for product installation.

13.18 Preparation

13.18.1 Surface Preparation: -

13.19 Installation

13.19.1 General:

1. Install panels plumb, level and true in compliance with fabricator’s recommendations.
2. Anchor panels securely in place in accordance with fabricator’s approved shop drawings.
3. Comply with fabricator’s instructions for installation of concealed fasteners and with provisions of Section 07 90 00 for installation of joint sealers.
4. Installation Tolerances: Maximum deviation from horizontal and vertical alignment of installed panels: 0.25 inch in 20 feet (6.4 mm in 6.1 m), noncumulative.

13.19.2 Related Products Installation Requirements: Refer to other sections in Related Sections paragraph herein for installation of related products.

13.20 Field Quality Requirements

13.20.1 Field Quality Control: Comply with panel system fabricator’s recommendations and guidelines for field forming of panels.

13.20.2 Fabricator’s Field Services: Upon Owner’s request, provide fabricator’s field service consisting of product use recommendations and periodic site visit for inspection of product installation in accordance with fabricator’s instructions.

1. Site Visits: As requested by owner

13.21 Adjusting

13.21.1 Adjusting:

1. Repair panels with minor damage such that repairs are not discernible at a distance of 10 feet (3 m).
2. Remove and replace panels damaged beyond repair.
3. Remove protective film immediately after installation of joint sealers and immediately prior to completion of composite metal panel work.
4. Remove from project site damaged panels, protective film and other debris attributable to work of this section.

13.22 Cleaning

13.22.1 Cleaning: Remove temporary coverings and protection of adjacent work areas. Repair or replace damaged installed products. Clean installed products in accordance with manufacturer’s instructions prior to owner’s acceptance. Remove construction debris from project site and legally dispose of debris.

13.23 Protection

13.23.1 Protection: Protect installed product’s finish surfaces from damage during construction.

1. Institute protective measures as required to ensure that installed panels will not be damaged.

14. ROOFING

14.1 Scope

14.1.1 This Section deals with steel profiled sheeting used as external weather-proof cladding of roofs.

14.2 Roof Cladding

14.2.1 Sheet type: Spandek hiten roofing sheets manufactured by John Lysaght, No.18 Benoi Sector, Jurong, Singapore 2262 or equivalent.

14.2.2 Structural support: timber sections as per drawings.

14.2.3 Fastening: No. 12-14x45mm hexagonal head self-drilling and tapping screw seal.

14.2.4 End laps: 200mm and should be sealed with a recommend sealant for pitches below 7 degrees.

14.2.5 Side laps: as per manufacturer's recommendations.

14.3 Products

14.3.1 The profiled sheeting shall be in galvanized sheet steel with a factory per finished protective PVC film with colour to approval.

14.4 Workmanship

14.4.1 Accessories: Flashing, trims, filler pieces, spacers, tapes, sealant, etc. where not specified to be the types recommended by the sheet manufacturer.

14.4.2 Fastening: Select types and location of fastenings to meet the following requirements.

14.4.2.1 Wind suction loaded: Calculate in accordance with CP 3: Chapter5: Part2 , making due allowance for any internal pressure.

- Basic wind speed: 45 m/sec.
- Topography factory S1 : 1.0
- Ground roughness, building size and height Factory (S2) : as determined from CP3:Chapter5 : Part 2, Table 3.
- Statistical factor (S3) : 1.0

14.4.3.2 Imposed loads other than wind and maintenance load, 1.5 KN/m2 concentrated on a 300mm^2 which ever produces the greater stress. Maintenance point load: 0.9 KN concentrated on any 125mm^2.

14.4.3.3 Dead load: allow for self-weight of sheeting.

14.4.3.4 Roof pitch: as indicated on drawings.

14.4.3.5 Distance between not less than 900mm or as indicated on the drawings.

14.5 Fixing

14.5.1 Quality of Work: Handle and store to preserve surface using clean dry gloves. Do not slide sheets over rough surface or each other. Packs of all sheets must be kept dry in transit and stored clear of the ground under cover to prevent water and /or condensation being trapped between adjacent surfaces. If packs become wet, sheets should be separated, wiped with a clean cloth without delay and placed so that air calculation completes the drying process.

14.5.2 Structure: Check that structure is in a suitable state to receive sheets before commencing fixing. Contractor must confirm acceptance to consultant

14.5.3 Structure: Do not fix profiled sheeting until final coats of paints have been applied to outer surfaces of supporting structure.

14.5.4 Isolating Tape: Apply to those surfaces of supports which would otherwise be in contact with sheeting or accessories after fixing.

14.5.5 Cutting and drilling:

14.5.5.1 Cuts sheets accurately with clean, true lines and no distortion with a power saw with abrasive cutting disc.

14.5.5.2 Cut openings in sheet for out lets, vent pipes , flues etc. to the minimum size necessary . Reinforce edges of openings with structural members.

14.5.5.3 Drill all holes. Position at regular intervals in straight lines. Holes for primary fastenings to be 1.5mm larger than the diameter of fastening unless self-drilling type is used.

14.5.5.4 Remove burrs, drilling swarf, lubricant, dust and any other foreign matter before finally fixing sheets into position.

14.5.6 Direction of Laying: Lay sheets with exposed joints of side lap away from prevailing wind.

14.5.7 End Laps: to be fully supported.

14.5.8 Sealant:

14.5.8.1 Install to manufactures recommendation.

14.5.8.2 Position in straight, unbroken lines parallel to edges of sheets. Placed into corrugations. Do not allow to sag into position.

14.5.8.3 Ensure continuity and effectiveness of seal, especially at corners of sheets.

14.5.8.4 Do not over compress.

14.6 Fittings and Features

14.6.1 Profile Fillers: use where specified and wherever necessary to close off corrugation cavities from the outside and inside of the building. Position on the line of, or above, fastening and ensuring a tight fit and leaving no gaps. Where sealed laps are specified bed profile fillers in sealant on top and bottom surface, but do not obstruct channels for ventilation or condensation drainage.

14.6.2 Flashing Trims: All fittings for flashing / trim shall be as per manufacturers’ recommendation and lapped at joints as follows:

13.6.2.1 Vertical and sloping flashing / trims: end lap to be the same as for adjacent sheeting.

13.6.2.2 Horizontal flashing / trims: end laps to be 150mm and sealed.

14.6.3 Gutter: Ensure that gutters are fully supported at each joint and at intermediate position not more than 900mm apart. Fix with spigot ends up the slope and make all the joints fully watertight. Position sheeting to leave a clear width across the gutter of not less than 230mm.

14.6.4 Insulation:

- 75mm thick Rock Wool insulation blanket with aluminium foil backing on both sides laid between purlins at 1000 centres, including wire mesh. Manufacturer and reference - to approval.

15. FINISHES

15.1 General

15.1.1 Glazed Ceramic Tile shall comply with British Standard specification No. 1281 and shall be approved sizes as shown on Drawings and the product of a reputable manufacturers approved by the Consultant.

15.1.2 Unglazed Ceramic Tile shall comply with the requirements of British Standard No.1286 and shall be of approved sizes as shown on the drawings and the product of a reputable manufacturer.

15.2 Manufacturers

15.2.1 All tiles, ceramic or homogenous, for the project shall be manufactured as mentioned on finishing schedule / details drawings. Required brands of tile shall be use only described locations and tile brands shall not change if only approved by consultant.

15.2.2 Following brands of tiles shall use for described locations as per finishing schedule / details drawings. All the tiles shall be submitted to Consultant for approval prior to use.

- Niro
- Cotto
- Lanka tile
- White horse

15.3 Ceramic and Vitreous Tile Materials

15.3.1 Ceramic and Vitreous clay Wall Tiles:

15.3.1.1 All tiles for wall installation shall be have cushion edge, impervious, polished or semi-polished porcelain and highly glazed surface. Colours shall be as selected by the Consultant and shall include trimmers, corner pieces, bullnose and all other special shapes indicated or required. All this shall be free from flaws, cracks and crazing.

15.3.2 Floor Ceramic and Vitreous Tiles

15.3.2.1 All porcelain floor tiles should exhibit required texture as indicated or required (polished, semi-polished, no skid or heavy duty) and it should be laid with 3mm groove. Floor tiles shall be specially prepared for floor use but shall have all the qualities of ceramic tiles listed above for wall use.

15.4 Flooring

15.4.1 Vinyl flooring:

15.4.1.1 Marbleised, directional vinyl sheet and tile flooring with extra strong polyurethane reinforcement with a subtle blend of light through to dark tones. All vinyl flooring, homogenous or permanently static dissipative pressed, shall be utilised at specified locations as indicated in the drawing. It shall have the required thickness as indicated in the drawing and shall include coving, cover formers, end cap strip on coving top.

15.4.1.2 Following brands of vinyl flooring shall use for described locations as per finishing schedule / details drawings. All types of vinyl flooring shall be submitted to Consultant for approval prior to use.

- Tarkett (United States of America)
- Objectflor Art and Design GmbH covering (Germany)

15.4.2 Carpeting:

15.4.2.1 Both loop and cut pile plain fiber carpets must meet the requirements of EN 1307 and should be 100% permanent colour polypropylene having a 5mm underlay with imported grippers. It shall include aluminium single side edging and must be soil and stain resistant.

15.4.2.2 Following brands of carpets shall use for described locations as per finishing schedule / details drawings. All types of carpets shall be submitted to Consultant for approval prior to use.

- danfloor (United Kingdom)
- Forbo flooring systems (Switzerland)

15.4.3 Cement Flooring:

15.4.3.1 Thin section cement render (2-4 mm thick per coat) shall be used as cement rendering over bricks and/or blocks to achieve a modern rendered finish and shall possess high water resistance. Following brands of cement render shall use for described locations as per finishing schedule / details drawings. All types of cement render shall be submitted to Consultant for approval prior to use.

- SUPA COAT (Australia)
- Hanson Portland-limestone Cement (Germany)

15.4.3.2 Provision of external cement paving of 450mmX450mmX50mm as well as 75mm interlocking paving as indicated in the drawing for external walkways and car port area respectively. Following brands of paving shall use for described locations as per finishing schedule / details drawings and shall be submitted to Consultant for approval prior to use.

- PRIORA MARSHALLS (United Kingdom)

15.5 Wall papers Provision of acrylic/vinyl coated wall papers on plastered walls with 100mm high timber skirting. The plastered walls must be kept dry before placing wall papers to ensure proper adherence of wall paper to the wall and also aides for future removal. Following brands of wall papers shall use for described locations as per finishing schedule / details drawings and shall be submitted to Consultant for approval prior to use.

- Brewster Home Fashions (United States of America)
- Mirage Wall coverings (United States of America)

15.6 Wood veneer Wood veneer shall comply with ISO 9001 (Quality Management) and ISO 14001 (Environment Management) and finish up to ceiling level with 100mm timber skirting. Its natural wood surface shall be protected by a proprietary wear-resistant film or coat. Following brands of wood veneers shall use for described locations as per finishing schedule / details drawings and shall be submitted to Consultant for approval prior to use.

- Proligna **(**Prodin-Prodema – Spain)
- Gunlocke (United States of America)

15.7 Ceiling

15.7.1 Suspended Ceilings:

15.7.1.1 Suspended aluminium ceilings shall be powder coated with a material, preferably epoxy, polyester or epoxy polyester with the approval of consultant.

15.7.1.2 Aluminium concealed clip-in grid ceiling system comprising a “spring T” or ‘A spring” that supports the ceiling tiles. It shall be fixed to and below a primary grid, usually a galvanized channel section as indicated and approved by the Consultant.

15.7.1.3 Provision of plain mineral fibre acoustical suspended ceilings with fibres mixed with wet process with a high quality vinyl emulsion paint surface coating.

15.7.1.4 Following brands of ceiling types shall use for described locations as per finishing schedule / details drawings. All finishing materials shall be submitted to Consultant for approval prior to use.

- Technical Metal Industrial Co.L.C.C (United Arab Emirates)
- Hebei Optimum Construction Materials Co., Ltd (China)

15.7.2 Composite Board:

15.7.2.1 Zinc Aluminium Composite board with multi-layer Ti-Zinc treated surface protected by fluorocarboned resin paint FEVE. Following brands of crash rails shall be used for described locations as per finishing schedule / details drawings and shall be submitted to Consultant for approval prior to use.

- Alucobond (Germany)

15.8 Corner Guards

15.8.1 Surface mounted guards consisting of a continuous retainer with snap-on Acrovyn 4000 cover. Color matched end caps to be provided for both partial and full height applications and shall be approved by Consultant.

15.8.2 Following brands of corner guards shall be used for described locations as per finishing schedule / details drawings and shall be submitted to Consultant for approval prior to use.

- C/S Acrovyn

15.9 Crash Rails

15.9.1 Crash rails shall be 150mm wide and comprise of fireproof PVC plastic acrylic cover with aluminium alloy inner-support.

15.10 Partition Walls

15.10.1 Provision of Aluminium Composite board partition wall framed with aluminium extrusion, covered by powder coating. The infill panel shall be laminated glass consisting of two layer of normal glass sandwiched with the underlay polyvinyl butyral (PVB) firm. This shall be provided at described locations as per finishing schedule / details drawings with excellent sound & thermal insulation as well as 100% water proof and resistant to stains.

15.10.2 Tempered glass partition walls at described locations as per finishing schedule / details drawings shall be 12mm thick and insulated properly.

15.10.3 All laminated phenolic board partition systems shall be impregnated with melamine resin and decorated on both sides. It must be resistant to damage from impacts or stains, including indelible inks and highly durable.

15.10.4 Following brands of partition walls shall be used for described locations as per finishing schedule / details drawings and shall be submitted to Consultant for approval prior to use.

- Reliance Metal Industries Sdn Bhd (Malaysia)
- MDP Enterprises (India)
- Hufcor (United States of America)
- Ironwood Manufacturing (United States of America)

15.11 Mortar Materials

15.11.1 Standard brand of light gray or white Portland cement as specified in drawings/Finishing schedule/ BOQ, conforming to current British Standard specifications shall be used.

15.11.2 Sand: shall be clean, sharp, river sand, conforming to British Standard Specifications and graded fine to coarse within the following limits: 100% passing 8 sieve, 90% to 100% passing 16 sieve, 60% to 90% passing 30 sieve, 25% to 55% passing 50 sieve and 0% to 15% passing 100 sieve.

15.12 Cement Colour

15.12.1 Dry cement colour, chemically inert, non-fading, alkali fast, mineral pigment, as approved shall be used wherever refinished.

15.13 Waterproofing

15.13.1 Floors of toilet areas, corridors and planter boxes shall be treated with an appropriate water proofing coating, approved by the Consultant

15.14 Installation Requirements

15.14.1 As far as possible, tile lay out work should be in such a way that no tiles less than half size occurs.

15.14.2 Align joints in wall tile vertically and horizontally except where other patterns are shown or specified, Align joints in floor tiles at right angles to each other straight with walls to conform to the patterns selected.

15.14.3 Verify locations of accessories before installing tiles. Work shall be coordinated with plumbing and other trades before starting of tile work.

15.14.4 Installation of ceramic and vitreous tile shall be in accordance with manufacturer's instructions.

15.15 Floor Tile Installation

15.15.1 All ceramic and vitreous clay tile floors shall be in Portland cement setting beds. Concrete surfaces shall be cleaned and surface of concrete shall be wetted prior to placing of setting bed mortar. Tiles shall be immersed in water for minimum of 4 hours before laying.

15.15.2 Setting Bed Mortar Mix: shall consist of one (1) part Portland cement and two (2) parts dry sand, by volume, to which not more than 1/10 part of hydrated lime may be added.

15.15.3 When mixed with water, the mortar mix shall be of such consistency and workability as to produce maximum density. Determine consistency by stroking the mortar surface with a trowel. Where of correct consistency, the trowelled surface readily assumes a smoothed, slickened appearance.

15.15.4 Spread setting bed mortar and screed to provide smooth, dense beds with true planes pitched to drains. The thickness of bed shall be such that the floor tile will finish flush with adjacent finished flooring, but bedding shall have average thickness of 38mm.

15.15.5 After bed has set sufficiently to be worked over, trowel or brush a thin layer, 3mm in thickness, of neat Portland cement or special tile adhesive (approved by Consultant) paste over the surface of the back of tile.

15.15.6 Do not prepare larger setting bed than can be covered with tile before the mortar sets.

15.15.7 Press tile firmly into the bed tapping with wood blocks to obtain firm bedding of total tile area and a smooth top surface.

15.15.8 All tiles shall be properly aligned with straight joints in even widths. Joints width shall be determined by spacers on ceramic tiles. Tamping shall be completed within one (1) hour after placing tile. Adjust work out of line within this period.

15.15.9 Tiles shall be fitted closely around pipes running through walls and floors. Pitch floors to drains.

15.16 Wall Tile Installation

15.16.1 Base Plaster 13mm thick applied to masonry wall shall be one-part Portland cement, three-parts of river sand by volume. Where additional thickness build-up is required to conform to indicated lines, apply as separate coat at no cost to employer.

15.16.2 Setting bed of tiles shall be done with cement slurry or special tile Adhesive (approved by Consultant). The thickness of slurry bed shall be 3mm thick minimum for setting tiles and walls.

15.16.3 Installation of tiles shall be in accordance with standards and applicable requirements previously specified for floor tile.

15.16.4 Tiles shall be installed in perfect vertical plumb and as per the pattern and joints if shown on drawings

15.17 Grouting

15.17.1 Grouting shall not commence for at least 24 hours after placing of tiles.

15.17.2 Grout for floor and wall ceramic and vitreous tiles shall be waterproof, neat white Portland cement with dry cement colour added as directed by the Consultant. If white grout is selected, cement shall be white.

15.17.3 Grout mixed to a creamy consistency in accordance with manufacturer’s directions shall be used for joint filling. Maximum width of joints shall be 3mm.

15.17.4 Force maximum grout into the joints with trowel. Before grout sets, strike or tool joints to base of cushion and fill all skips and gaps. Do not permit setting bed materials to show through grouted joints.

15.17.5 Cure grout joints by maintaining damp condition for three (3) days by sponging down, or other methods approved by the Consultant. Allow floors to set 48 hours before permitting ordinary foot traffic.

15.18 Defects in Tiles and Tile Laying

15.18.1 The surface of all tiled floors shall be perfectly in level and shall be executed by experienced workers in the field of tile laying.

15.18.2 A sample panel of laid tiles of each type shall be approved by the Consultant before commencement of tile laying.

15.18.3 Mismatches of colour, chipped or damaged tiles installed by the Contractor shall be rejected and shall have to be replaced by the Contractor at his own cost and risk.

15.18.4 Mismatches of colour in tiles installed by the Contractor shall be rejected and shall have to be replaced by the Contractor at his own cost and risk.

15.19 Guarantees

15.19.1 Manufacturer shall provide his standard guarantees for work under this section. However, such guarantees shall be in addition to not in lieu of all other liabilities which manufacturers and Contractor may have by other provisions of the Contract Documents.

16. PAINTING

16.1 Material

16.1.1 All paints shall be approved by the Consultant for colour, quality and type. All painting work shall be carried out in accordance with the paint manufacturer's specifications unless otherwise directed by the Consultant.

16.1.2 All paints and finishes used for the project shall be manufactured by or under license from the following manufacturer;

Nippon Paints (Japan)

Imperial Chemical Industries (UK)

Sigma Paints (Saudi Arabia)

Paints from manufacturers not listed above shall only be used with prior written approval of the Consultant

16.1.3 Paint shall be ready mixed and all paints, varnishes, enamels, lacquer stains, paste fillers and similar materials shall be delivered to the site in the original containers with the seals unbroken and labels intact. Each container shall give the manufacturer's name, type of paint, colour of paint and instructions for reducing. Thinning shall be done only in accordance with the manufacturer's directions.

16.1.4 Use of product by the same manufacturer shall be a general rule in each stage of work in this Specification.

16.1.5 Colour, luster, colour scheme, finish shall be decided by the Consultant after checking sample paint test.

16.1.6 The painting shall be performed by experienced and competent painter.

16.1.7 Where walls are specified to be painted, all columns arises, groove, rough surfaces, reveals, soffits and returns, etc. shall be included and no extra shall be payable.

16.2 Definition of Terminology

16.2.1 Surface Sealing

Surface to be painted shall be sealed to have uniform suction and prevent lye from oozing out.

16.2.2 Spot Puttying

All cracks and depressions shall be filled flush with putty.

16.2.3 Puttying

All surfaces to be painted shall be puttied uniformly flat surface.

16.2.4 Spot painting

Spot puttied area shall be touched up by paint

16.2.5 Touch-up

Any damaged area after the prime coat has been applied shall be touched up

16.2.6 Drying hour

The drying time of double-coated paint shall be measured at the temperature of 20°C and humidity of 70%.

16.2.7 Amount of paint

The amount shall be standard amount of paint itself not including thinner. It shall increase or decrease depending on shape and surface condition in the process of painting.

16.3 Paint Finish Symbols

OP	Synthetic resin mix paint finish
VP	Solvent-polyvinyl chloride resin paint finish
EP	Polyvinyl acetate resin emulsion paint finish
AEP	Synthetic resin emulsion paint finish
CL	Clear lacquer finish
EXP	Epoxy resin paint finish
Stipple (OP)	Stippled finish (oil mix paint finish)
Stipple (EP)	Stippled finish (polyvinyl acetate resin emulsion paint finish

16.4 Painting in General

16.4.1 Preparation of Paint

17.4.1.1 Mixing: Paint content with pigment shall be thoroughly stirred to make a uniform consistency.

17.4.1.2 Thinning: Portable water shall be used for thinning of emulsion paint and water-soluble paint. Proper thinner, product of the same manufacturer as paint, as a rule, shall be used for other types of painting. Percentage of thinning and viscosity shall be conducted with direction of manufacturer or catalogue as they vary with the method of paint, temperature, type of material to be painted.

17.4.1.3 Allowable period of Use: Paint mixed with more than 2 types shall be used with direction of a manufacturer or catalogue as allowable period of use, mixing ratio and mixing method vary. The paint which has passed allowable period of use shall not be used.

16.4.2 Conditions of Painting

16.4.2.1 Work shall not be executed in the following situations

16.4.2.1.1 When humidity is above 85%

16.4.2.1.2 When raining or it is forecast

16.4.2.1.3 When dusts are present

16.4.2.1.4 When temperature of surface is high under hot weather and bubbles are likely to develop on the painted surface.

16.4.2.2 Conditions of Surface to be painted: Work shall not be executed or proper means shall be taken in the following situations.

16.4.2.2.1 When surface is damp and wet

16.4.2.2.2 When condensation is likely to develop on the surface.

16.4.2.2.3 All nail holes on veneer, board. etc., shall be covered with proper rust-proof paint before the subsequent painting is applied in accordance with this specification.

16.4.3 Performance

Paint shall be evenly and uniformed applied on the surface. Areas of difficult application such as pointed part, internal angle, welded part, etc. shall be thoroughly painted and double coated as necessary to deep uniform coating thickness.

Painting shall be properly done by carefully selecting the painting method by the shape of surface and types of paint.

16.4.4 Protection

17.4.4.1 Dangerous material such as paint, thinner, etc., excluding emulsion paint and water-soluble paint shall be kept in accordance with regulations concerned.

16.5 Procedure of Painting

16.5.1 Exterior - Surface of Mortar, Plaster and Concrete

AEP- Weather shield Exterior paint

Coating Process	No. of Coats	Type of Paint	Drying hour
1. Surface preparation		Dry, clean and free from impurities	
2. Surface sealing	1	Exterior Wall Sealer	As per manufacture's specifications
3. Texture base	2	texture base putty mechanically sprayed uniformly	As per manufacture's specifications
4. Surface finishing		Flatten with masonry trowel uniformly surfaced	
5. First coating	1	Weather shield paint	As per manufacture's specifications
6. Finish coating	2	Weather shield paint	As per manufacture's specifications

Notes:

Degree of dryness on the surface to be painted shall be kept under 6% in water content and below PH 9.5

Puttying and sanding process shall allowed to omit depending on the conditions of the surface.

Drying time of putty shall be long enough for sanding to proceed.

Amount of sealer for surface sealing shall be adjusted with direction of the Consultant as it varies with the surface conditions.

16.5.2 Exterior - Iron Products in General

OP - Synthetic resin mix paint

Coating Process	No. of Coats	Type of Paint	Drying hour
1. Surface preparation		Completely remove rust, moisture, oil and other impurities by sander, cleaner and surface.	
2. First Coating 24 hours	1	Rust proof oil paint	As per manufacture's specifications
3. Touch-up		Touch-up rustproof oil paint	
4. First Coating	1	Rustproof oil paint	As per manufacture's specifications

5. Second coating	1	Synthetic resin mix paint	As per manufacture's specifications
6. Finish coating	1	Synthetic resin mix paint	As per manufacture's specifications

Note:

Paint for touch-up painting shall be the same as used for first coat in process No. 2

16.5.3 Exterior - Wood

OP - Synthetic resin mix paint finish

Coating Process	No. of Coats	Type of Paint	Drying hour
1. Surface preparation		Clean and sand to plane surface	
2. Knot treatment	1-2	Lacquer varnish	As per manufacture's specifications
3. First coating	1	First coat paint of oil mix paint	As per manufacture's specifications
4. Second Coating	1	Oil mix paint	As per manufacture's specifications
5. Finish coating	1	Oil mix paint	As per manufacture's specifications

Note:

Puttying and sanding shall be done after process No.2 when there are cracks, etc. on the surface putty shall be oil-putty, but drying time shall vary depending on conditions.

16.5.4 Interior - Mortar, board, etc.

Stipple (EP) - Polyvinyl acetate resin emulsion paint finish

Coating Process	No. of Coats	Type of Paint	Drying hour
1. Surface preparation		Dry, clean and free from impurities	
2. Surface sealing	1	Sealer for emulsion paint	As per manufacture's specifications
3. Puttying		Putty for emulsion paint	
4. Grinding		Grind with proper grinding tool	
5. Spot painting		Second coating paint of polyvinyl acetate resin emulsion paint	
6. Second Coating	2	Polyvinyl acetate resin emulsion paint	As per manufacture's specifications
7. Finish Coating	1	Polyvinyl acetate resin emulsion paint for stipple-finish	As per manufacture's specifications

Notes:

Degree of dryness on the surface to be painted shall be kept under 6% in water content and below PH 9.5

Puttying and sanding process shall allowed to omit depending on the conditions of the surface.

Drying time of putty shall be long enough for sanding to proceed.

Amount of sealer for surface sealing shall be adjusted with direction of the Consultant as it varies with the surface conditions.

16.5.5 Interior - Mortar, plaster, concrete, etc.

VP Solvent - Polyvinyl chloride resin paint finish

Coating Process	No. of Coats	Type of Paint	Drying hour
1. Surface preparation		Dry, clean and free from impurities	
2. Surface sealing	1	Sealer for emulsion paint	As per manufacture's specifications
3. Puttying		Putty for polyvinyl chloride resin paint	
4. Grinding		Grind with proper grinding tool	
5. Spot painting		Solvent-polyvinyl chloride resin enamel emulsion paint	
6. Second Coating	1	Solvent-polyvinyl chloride resin enamel emulsion paint	As per manufacture's specifications
7. Finish Coating	2	Solvent-polyvinyl chloride resin enamel emulsion paint	As per manufacture's specifications

Notes:

(a) Degree of dryness on the surface to be painted shall be kept under 6% in water content and below PH 9.5
(b) Puttying and sanding process shall allowed to omit depending on the conditions of the surface.
(c) Drying time of putty shall be long enough for sanding to proceed.
(d) Amount of sealer for surface sealing shall be adjusted with direction of the Consultant as it varies with the surface conditions.

16.5.6 Interior - Mortar, plaster, concrete, etc.

EP Polyvinyl acetate resin emulsion paint finish

Coating Process	No. of Coats	Type of Paint	Drying hour
1. Surface preparation		Dry, clean and free from impurities	
2. Surface sealing	1	Sealer for emulsion paint	As per manufacture's specifications
3. Puttying		Putty for emulsion paint	
4. Grinding		Grind with proper grinding tool	
5. Spot painting		Polyvinyl acetate resin emulsion paint	
6. Second Coating	1	Polyvinyl acetate resin emulsion paint	As per manufacture's specifications
7. Finish Coating	1	Polyvinyl acetate resin emulsion paint	As per manufacture's specifications

Notes:

(a) Degree of dryness on the surface to be painted shall be kept under 6% in water content and below PH 9.5
(b) Puttying and sanding process shall allowed to omit depending on the conditions of the surface.
(c) Drying time of putty shall be long enough for sanding to proceed.
(d) Amount of sealer for surface sealing shall be adjusted with direction of the Consultant as it varies with the surface conditions.

16.5.7 Interior - Iron products, steel.

OP - Synthetic resin mix paint

Coating Process	No. of Coats	Type of Paint	Drying hour
1. Surface preparation		Completely remove rust, moisture, oil and other impurities by sander, cleaner and surface	
2. First Coating	1	Synthetic resin rust-proof. Red lead-type, lead compound-type	As per manufacture's specifications
3. Touch-up		Touch-up rust proof paint	
4. First Coating	1	Synthetic resin rust-proof paint. Red lead-type, Lead compound-type	As per manufacture's specifications
5. Second Coating	1	Synthetic resin mix paint	As per manufacture's specifications
6. Finish Coating	1	Synthetic resin mix paint	As per manufacture's specifications

Notes:

(a) Paint for touch-up painting shall be the same as used for first coat in process No.2
(b) When oil rust-proof paint is used instead of synthetic resin rust proof, its specification shall conform to No. 5 and No.6.

16.5.8 Floor - Concrete and Mortar

EXP - Epoxy resin paint finish

Coating Process	No. of Coats	Type of Paint	Drying hour
1. Surface treatment		Dry, clean and free from impurities	
2. First coating	1	First coating paint for epoxy	As per manufacture's specifications
3. Finish Coating	2	Epoxy resin paint	As per manufacture's specifications

Notes:

(a) Degree of dryness on the surface to be painted shall be kept under 6% in water content and below PH 9.5.
(b) Amount of paint and number of paint shall be as directed by the Consultant as they vary with the conditions of surface and required thickness of coating.

(c) Painted surface shall be kept out of use for more than 7 days after application of final coat.

17. PLUMBING

17.1 General

The materials used and workmanship shall be of highest quality and grade unless otherwise specified shall conform to the latest specifications of British Standards and Codes of Practice for “ Water Supply “Sanitary, Pipe Work “Building Drainage “ Surface Water and Sub- Soil Drainage” and applicable to details and work indicated on the Drawing and Bill of Quantities. In case of any discrepancy / ambiguity the decision of the Consultants shall be final, and the contractor will act and perform accordingly.

The work shall be executed strictly in accordance with the rules and regulations set by the relevant local authority of the Maldives.

The Contractor shall be responsible for obtaining the necessary approvals and test certificates from the concerned departments of Maldives.

Plumbing work shall be carried out by licensed plumbers and shall produce the copy of the license along with the tenders, or approved by the Consultant.

Any damage done by the Contractor to any existing work during the course of execution of his work, shall be made good by him at his own cost. Failing which it shall be get done by the Consultants at Contractor’s risk and cost.

The Contractor shall be responsible to connect the drainage and water supply to the mains and to obtain the necessary approvals and certificates from the relevant authorities of the Maldives.

All connections to mains and meter installation shall be arranged by the Contractor and payment of fees thereof, if any, shall also be made by him.

The Contractor shall be responsible for the watch and ward of all fittings until the Works is fully completed and handed over to the Project manager.

The levels, measurements and other information concerning the existing site as shown on the drawings or as described as are supposed to be correct. The Contractor shall, however, verify them by himself and no extra claim whatsoever shall be entertained on account of the errors or omissions in such matters or on account of the descriptions turning cut to be different from what was excepted.

The Consultant shall instruct the Contractor to purchase and use such materials of particular make or from particular source as may in his opinion be necessary for proper and reasonable compliance with the specification and execution of the Works.

After all plumbing fixtures and equipment have been set ready for use, and before the Contractor leaves the job, he shall thoroughly clean all fixtures installed by him, removing all plaster, stickers, rust stains and other foreign matter of discolouration on fixtures, leaving every part in acceptable condition and ready for use to the satisfaction of the Consultants.

17.2 Drawings and Information Required

The Contractor shall submit shop drawing for the entire installation including installation details for all items required or asked for approval of the Consultant.

Approved by the Consultant of shop drawing for any material, apparatus, devices and layout, shall not relieve the Contractor from the responsibility of furnishing same of proper dimension, size, quantity and all performance characteristic to efficiently perform the requirements and intent of the Contract Documents. Such approval shall not relieve the Contractor from responsibility for errors of any sort in the shop drawing.

If the shop drawings deviate from the contract Documents the Contractor shall advise the Consultants of the deviations in writing accompanying the shop drawings including the reasons for the deviations. At the start of the Project the Contractor shall periodically and thereafter submit to the Consultants list of all shop drawings which will be submitted in the course of the project. The list shall show the disposition of each item including date of submission approval etc. The list shall be kept up to date through the entire course of construction.

17.3 Record Drawing

During Construction the Contractor shall keep an accurate record of all deviations between the work as shown on the Contract Drawings and that which is actually installed.

The Contractor shall secure from the Consultants after approval of his Shop Drawing a complete set of drawing and note changes thereon in ink.

The Contractor shall make a complete record of all changes and revisions in the original design which exist in the completed work.

The cost of furnishing above prints and preparing these for record " shall be deemed to be include in the tendered cost and its effects spread over other items of work, and as such item shall not be a subject to payment". When all revisions showing the work as finally installed the corrected Original Transparencies shall be submitted to the Consultants before final payment for the completed work will be made.

17.4 Operating and Maintenance Instructions

17.4.1 Three sets of operating and maintenance instruction covering completely the operation and maintenance of all plumbing equipment, controls, heaters, pumps and the like shall be furnished to the Project manager, by the Contractor.

17.5 Test

Leak test of plumbing and drain to be completed.

Above ground pressure

The entire system of drains, waste and vent piping inside and outside the building shall be tested by the Contractor under a water test, which shall include the entire system from the lowest point to the highest pipes above the roof.

Ensure that all installation work related to the pipe network that are to be tested are completed.

The Underground pipe works are to be leak tested prior to ground screed laying.

Once the leak tests are completed in portions of pipe networks, underground pressure pipe works are to be pressure tested as whole network unit as per site requirements.

Vent pipes to be tested for the purpose of remove trapped in air.

Supply water pipe works shall be pressure tested according to their respective utility company. (state the no. of bar and the time duration stated by the utility company.

The water test shall be made in accordance with all local requirement. Every portion of the system shall be tested to a hydrostatic pressure equilent to latest 15 feet head of water. After filling, the Contractor shall shut off water supply and shall allow it to stand 2 hours under test during which time there shall be no loss or leakage.

The Contractor shall furnish and pay for device, material supplies, labour and power require for all tests. All tests shall be made in the presence and to the satisfaction of Consultant.

Defects disclosed by the test shall be repaired or if required by the Consultant defective work shall be replaced with new work without any extra charge to the Project manager. Test shall be operated as directed until the work is proved satisfactory.

Fixture shall be tested for soundness, stability of support and satisfactory operation.

The Contractor shall notify the Consultant at least one week in advance of making the required test, so that arrangements may be made for their presence to witness the test.

Equipment shall be tested in service and the Contractor shall demonstrate that the equipment performs the work intended for it and that it complies with the requirement of these specification for such equipment, to the satisfaction of Consultants.

The rates shall include for all costs associated with tests.

17.6 Work in Common Piping

17.6.1 Material

17.6.1.1 Piping and fitting material shall be uP.V.C, Hard Impact P.V.C. or High Temperature P.V.C. and approved by the Consultant.

17.6.1.2 Piping material shall comply with requirements of water supply and sewerage and other relevant authorities.

17.6.1.3 Materials for the piping and service requirements shall basically conform to the service pressures encountered.

17.6.2 Providing Drawings and Manuals

17.6.2.1 The Contractor shall submit one set of originals and further two copies of layout drawings to the Consultant after completion of the Works. These drawings must give the following information:

(a) Run of all piping and diameter on all floors and the vertical stacks.
(b) Location and sizes of all control valves, access panels and other equipment.
(c) Location of all manholes and their sizes.

17.6.2.2 No completion certificate will be issued until the drawings are submitted.

17.6.2.3 The Contractor shall submit to the Consultant for approval, samples, shop drawings, manufacturer's drawings, equipment characteristics and capacity data etc. of all equipment, accessories devices etc. that he proposes to use in the installation.

17.6.3 Samples

17.6.3.1 The Contractor shall provide samples of all sanitary fittings, pipes and specials man-hole cover and frames, gratings and water supply pipes and fittings etc. and shall be deposited with the Consultant (which will be returned to the Contractor at the completion of the Works) and shall obtain approval from the Consultant before using in the Works. Any material rejected by the Consultant shall be removed from the site within 24 hours of rejection.

17.6.4 Drawings

17.6.4.1 The works shall be done in conformity with the plans and within the requirements of the general architectural, electrical and structural plans. This work shall be properly coordinated with the work of the other trades. Hangers and sleeves shall be furnished in time for their installation as other work proceeds.

17.6.4.2 The plumbing drawings are diagrammatic, but shall be followed as closely as actual construction. All deviations from drawings required to conform to the building construction shall be made by the Contractor at his own expense.

17.6.4.3 The architectural drawings shall take precedence over the plumbing drawings as to all dimensions.

17.6.4.4 Large size details shall take precedence over small size drawings. The special dimensions in the specifications or schedule of quantities or instructions of the Consultant shall supersede the drawings. The Contractor shall verify all dimensions at site.

17.6.4.5 The recommend position of the fittings, fixtures, control valves, tanks etc. as shown on the drawings will be adhered to as far as practicable.

17.6.4.6 Should there be any discrepancy due to incomplete description ambiguity or omission in the drawings and other documents, whether original or supplementary, forming the contract, either found on completion or during the currency of the installations work, the Contractor shall immediately, on discovering the same, draw the attention of the Consultants and the Consultants decision in final and binding on the Contractor.

17.6.5 Existing pipes

17.6.5.1 The site shall be examined for field drains and those, when found, shall be either entirely removed or diverted, trenches filled with dry earth in 200mm to 300mm layers and consolidated as directed by the Consultant.

17.6.6 Spare Parts

17.6.6.1 Necessary spare parts of the plumbing equipment for the one (1) year operation shall be supplied by the Contractor.

17.6.7 Excavation

17.6.7.1 All excavations shall be timbered to the satisfaction of the Consultant and the type of timber shall be suitable to the kind of earth encountered. Fixing of timber and removal after completion of work shall be done as directed by the Consultant.

17.6.7.2 Should any water accumulated in the trenches, headings or other excavation, the Contractor shall do such work as may be necessary to drain away the accumulated water and shall install pumps as may be required to keep the excavation and trenches dry. The Contractor shall ensure that the flow water in trenches or excavation does not injure or remove cement or aggregate of any concrete that has not set. No subsoil water shall be discharged into open drains or sewer at the site.

17.6.7.3 In refilling trenches after excavation this should be done in layers of 150mm after consolidating each layer. Special care shall be to see that the earth is packed uniformly and no injury to the pipe.

17.6.7.4 Rates for excavation should include for backfilling in consolidated layers where necessary and as directed by the Consultant.

17.6.8 Piping

17.6.8.1 The Contractor shall, as soon as possible after the award of the contract, prepare and submit to the Consultant for approval, working drawings showing exact locations and pipe runs for all pipework, the layout and setting up of equipment and the connection of piping to the equipment. Such drawings shall include details and methods of supports, anchors and sleeves etc.

17.6.8.2 Pipe runs shown in the drawings are approximate and intended to indicate the general run and locations only. The exact locations of all pipework shall be determined on Site.

17.6.8.3 All pipes, fittings etc. shall be kept closed against moisture and foreign matters when stored at site and during installation.

17.6.8.4 All pipes shall be fixed clear of one another and be so arranged as to provide easy access for maintenance and repair.

17.6.8.5 All plumbing work shall be carried out by suitably qualified plumbers in accordance with the British Code of Practice and Regulations and requirements of related Authorities.

17.6.8.6 Materials for the piping and service requirements shall basically conform to the service pressures encountered.

17.6.8.7 Each part of the installation of the plumbing work shall be completed in all details as shown in the drawings or as specified and provided with all necessary control valves, etc. that will be necessary for their satisfactory operation.

17.6.8.8 All piping shall be run plumb, and straight and parallel to walls, except drain line which shall pitch 6mm per 300mm in the direction of flow.

17.6.8.9 Pockets, unnecessary traps, turns and off-sets shall be avoided. When traps or pockets are unavoidable they shall be valved drains.

17.6.8.10 Piping installed on the concrete slab shall be firmly fixed or anchored to the floor with packing to prevent damage to pipes. Pipes shall not be bent with bender where cross with other pipe or change to upward.

17.6.8.11 Where pipes are to be laid directly in the ground, bed shall be sufficiently compacted, necessary protection for piping shall be taken.

17.6.8.12 Backfill shall be done after the approval of the Consultant in such a manner not to damage the pipe line and shall be restored to the original stage.

17.6.8.13 Where pipes penetrate through waterproof part or fire partition or fire wall, pipe sleeves shall be provided and clearance between pipe sleeve and pipe shall be filled with caulking material approved by the Consultant.

17.6.8.14 Pipes, fittings, valves and accessories shall be thoroughly cleaned, both internally and externally before installation and shall be cleaned before putting into service.

17.6.8.15 Plumbing work shall be completed in accordance with the details shown on the Drawings or as specified and provided with all necessary control valves, etc. that will be necessary for their satisfactory operation.

17.6.8.16 All pipes shall be cut square and true to the pipe axis by means of suitable tools without reducing pipe diameter and cut ends shall be finished smooth. Before making connections, chips, dirt and other foreign matter shall be removed from inside interior of each pipe. Fixing of hangars and embedding of pipe sleeves shall be carried out without delay along with the progress of the work where required.

17.6.8.17 Pipe connections for the water supply system shall be by uP.V.C high pressure. Jointing shall be generally by means of solvent cement according to manufacturer's instructions

17.6.8.18 Vertical pipe shall be braced at more than 2 point in every story.

17.6.8.19 After pipes are laid out and before they are hidden, water pressure should be checked. It should only be hidden after determining there are no problems with the pressure

17.6.8.20 Water pipes and waste water pipes should be connected to the sewer systems

17.7 Water Supply Work

17.7.1 Materials

Pipes, joints and fittings for water supply work shall be high pressure uP.V.C.S

Materials and workmanship shall comply with the local water supply authority requirements.

17.8 Water Pumps

The specification herein stated are basic guides only. Other items not so indicated but which are obviously necessary for the proper operation of the system as intended shall be supplied and installed, in accordance with accepted Consulting standard.

Manuals of operation and maintenance and list of spare parts shall be supplied together with the equipment.

The contractor shall submit at least four copies of pump performance curves showing among others, the pump rating and efficiency, properly marked out.

A metal name plate indication in indelible letters for the correct specification of the pump and motor shall be properly attached to the assembly at a location such that the information written thereon can be conveniently read by all concerned.

Well water pump and Fresh water pump: Flow rate = 60L/min, Head = 70m, Type : End suction Hydro pneumatic pump, 220/440V, 3-Phase, 50 Hz. Alternate and parallel operation. Fire pump: 50L/min, 70m head, Vertical multistage pump with alternative operations.

Water pumps placed should be Grundfos or a pump of that standard. After it is placed it should be shaded and kept accessible in case there is a problem. All the procedures for electricity and water connections should be given to the pump.

17.9 Spacing of supports

17.9.1 Support spacing for uP.V.C pipes shall be as follows

Nominal Dia.	upto 40	more than 50
Space (m)	1.2	1.5

17.10 Drainage Work

17.10.1 General

17.10.1.1 High Pressure uP.V.C pipe and fittings shall be used for all drainage work including vent pipes.

17.10.1.2 Joints shall be made by the cold-jointing method, and the pipe interior shall have not offset at the joint interfering with the flow. Joint adhesive shall be good quality and shall not be affected by heat and shock.

17.10.1.3 Where horizontal drain branch joints the main, such branch shall be connected to the main in a substantially horizontal position and at an acute angle of not more than 45 degree to the main in all cases.

17.10.1.4 Every toilet should have a gully attached for drainage purposes

17.10.2 Vent stack pipes

17.10.2.1 Vent pipe shall be vertically branched out upward from a horizontal drain branch pipe or other appropriate point. Horizontal branching of the vent pipe shall be done on approval of the Consultant.

17.10.2.2 Where vent pipes on each floor are to be connected to the vent stack, all connections shall be made at least 150mm above the respective overflow edges of fixture on that floor.

17.10.2.3 The provision of the preceding item shall also apply to the connection of vent stack vent pipe.

17.10.2.4 Vent stack shall be connected to the waste stack or soil stack at the lowest part to stack pipe.

17.10.2.5 Where vent pipe is to be connected to the horizontal drain pipe, such angle shall be more than 45 degree to upward.

17.10.2.6 Vent stack shall be extended 600 mm from the top of the roof or lead to the wall and top of pipe shall be covered with vent cap.

17.11 Laying of Pipes

17.11.1 The pipes shall be laid to proper lines and levels as shown in the plans and directed by the Consultant, as the main is laid, the front pipes in the trench shall always be closed with a plug either of iron or wood and security fastened. The plug shall not be removed except when pipe laying is resumed or for purposes of testing. (11.11)

17.11.1 The trench should be compacted before pipes of septic tank and leach field are placed

17.11.2 Water pipes and sewer pipes should be laid down in accordance to the drawing

17.12 Laying of sewer water Mains

17.12.1 All mains shall be laid on a good solid, bottom to prevent subsidence and consequent fracture.

17.12.2 Mains running under buildings, if unavoidable, shall be completely surrounded by 150mm of concrete.

17.12.3 In case of mains passing through a well, the weight of the latter shall be carried by a lintel or a suitable relieving arches.

All rising mains shall be properly plugged to all wall brackets at regular intervals as given in the drawings.

All mains shall be concealed inside wall as far as possible except for vertical sewer mains, cleaning doors shall be provided in the walls whenever necessary and as directed by the Consultant.

17.13 Sewers

After the cement has had time to set, the pipes shall be tested in length between manholes in following manner.

In the lowest manhole/intercepting trap as the case may be, a plug shall be inserted in the pipe. The disc in the pipe at the upper manhole shall be fitted with a filling pipe with a right angle bend and an air cook.

The pipe line shall then be filled with water by means of the pipe connection on the upper disc. The air cock on the upper disc shall be kept open while the pipe line is being filled to permit the escape of air.

When the pipes are filled with water and air excluded, the air cock shall be shut and the water shall be poured into conical filler, attached to the filling pipe until the water remains in the filter.

The filling pipe shall then be raised and fastened so that the height of surface of the water in the filler above the invert of the pipe is 1828 mm which will be usual test pressure for S.W pipes.

If the water level does not fall more than 16mm (12mm) in a length of 91.4 metre the test may be considered satisfactory.

The Contractor shall make good all defective work at his own expense

17.14 U.P.V.C Pipes

17.14.1 Manufacturer’s instruction should be followed in pipes to be used for water mains. Where specified, pipes shall have integral rubber ring joints and where solvent cement joints are specified, a sufficient number of expansion/contraction joints shall be incorporated in the length of mains to allow for variation of temperature to the recommendation of the pipe manufacturers.

17.14.2 These pipes shall be effectively protected from the direct rays of sun immediately after they are laid and until permission is given for the trenches to be refilled by the Consultant. Subject to such permission being obtained, trenches shall be refilled without delay. Final connection at a fixed point shall be deemed unto the majority of the length of the pipe line has been covered by backfill in order to reduce the effect of expansion and contraction caused by temperature variations .

17.15 Bends and other Specials

17.15.1 In fixing bends care shall be taken to see that the axis of the bend is truly vertical or horizontal as the case may be and the spigot of the bend is well in the socket of the pipe with which a joint has to be formed. The Contractor shall be called on to replace any faulty work at his own expense.

17.16 Flanged Joints

17.16.1 All flanged joints shall be made by painting the faces of the flanged with red lead freely and bolting the flanges evenly on all sides. A thin fiber of lead wool may be used in making the joints water tight when facing of the flanges is not true. Rubber insertions may be used with approval. Sewage resistant rubber insertion is to be used for sewer lines.

17.16.2 All joints should be connected properly with Aslon glue or equivalent.

17.16.3 Elbow or T joints should not be used for for drainage. Instead a junction should be kept in the areas where T/Elbow joints were going to be used.

17.17 Support for U.P.V.C Pipes

17.17.1 When U.P.V.C pipe lines incorporate metal valves or other heavy fittings, it is essential to support the valves directly rather than allowing their weight to be carried by the uP.V.C pipe and support shall be placed on either side of the fittings mentioned above. Moulded plastic fitting also should be supported.

17.17.2 Maximum allowable horizontal support distance for uP.V.C are given below.

18 **Nominal bore**	12 mm (1/2”)	18 mm (3/8”)	25 mm (1”)	32 mm (1¼”)	38 mm (1½”)	50 mm (2”)
Support distance	533 mm (1’9”)	616 mm (2’0”)	686 mm (2’3”)	764mm (2’6”)	840 mm (2’9”)	915 mm (3’0”)
Nominal bore	75 mm (3”)	100 mm (4”)				
Support distance	1220 mm (4’0”)	1290 mm (4’6”)				

18.12.1For vertical installation supports, distances shall be doubled.

17.18 Sewer pipes

17.18.1 All ‘P’, ‘S’, ‘I’ junctions bends etc. required shall be furnished and set without extra charge and shall confirm to the pipe specifications as to quality

17.19 Air Valves

These valves to be fitted as per drawings and Bill of Quantities shall be tested and accompanied by a certifying their efficiency.

The floating ball in the valve shall be suitable metal or vulcanite or rubber specially manufactured for tropical conditions.

17.20 Scour Washout Valve

These shall be provided at portions shown in place and shall contain in one unit a flanged scour valve with short connection pieces, cast iron bend and T pieces for connection to main pipe.

The rate shall also provide for short length of straight pipe to a convenient as per details complete with covers and surface boxes

17.21 Foot valves and Strainers

17.21.1 Foot valve and strainers should be of reputable manufacture approved by the Consultant and shall be fitted with flushing lever attachment where specified.

17.22 Pressure Reducers

17.22.1 Pressure reducing valves shall be of the equilibrium type of approved manufacture and capable of reducing the pressure to the valve required as per plan and Bill of Quantities.

17.23 Water Meter

17.23.1 The water meters shall be from FENAKA/MWSC and shall be approved by the consultant before installation.

17.24 Equilibrium Ball Valves

17.24.1 These should be of reputable manufacture approved by the Consultant and be of the angle pattern with gun metal valve seats guide bush, copper float with wrought iron lever and links with bronze pins.

17.25 Fittings

All sanitary pipes, gullies, water closets/bidets, squatting basins, sinks bath tubs etc. to be of approved design and to be obtained from approved Manufacture and to be of the best stoneware, glazed inside and outside, with burnt hard and sound, free from flaws, blisters, cracks and other imperfections and best quality commonly called ‘Firsts’.

Rates should include for all bends, junctions, traps, cleaning, painting, fixing clear of wall etc. complete as specified as per Bill of Quantities.

All pipes, fittings, flushing cisterns, valves, stop cocks, taps, tanks, surface boxes etc. to be of the best of their kinds and in addition to complying with previous clauses to be from approved Manufacturers and all taps, cocks, valves etc. to be screwed down pipe. Taps to be of brass/nickel coated and valves to be of gun metal. All tanks to be made fly-proof and to the complete satisfaction of the Consultant.

Rates should include for all cutting and waste, bends, taps junctures, cleaning eyes, tees.

17.26 Manholes, Manhole covers and Frames

Concrete cover slabs or top rings of manholes shall provide a suitable seating for a rectangular cover.

The frame shall have a clear opening of 0.61m x 0.61m or alternatively a circular or double triangular cover depending on the type of cast iron manhole cover to be used. The rate for manholes shall allow for such provision.

Where the supply of cast iron manhole cover and frames is payable separately the cost of setting, surrounding, painting and materials for same shall be allowed for in the rate for manholes.

Suitable lifting rings, hooks or brackets shall be provided in the precast manhole sections. Box holes shall be separately grouted with 1:2 cement mortar.

The contractor shall supply two manhole keys for each pattern of cover without additional charge over the rate for covers (or manholes).

Heavy duty (grade a) cast iron manhole cover and frames shall be of the double triangular type to bs and having a clear opening of 550mm dia.

Medium duty (grade b) cast iron manhole covers and frames shall be of the circular type having a clear opening of 550mm dia or the rectangular type having a clear opening of 0.61m x 0.61m and confirm to bs. They shall be of the single seal type, the weight of cover frame being approximately 127.00 kgs.

Light duty (grade c) cast iron manhole cover and frames shall be of the doubles seal flat type having a clear opening of 0.61m x 0.61m conforming to bs. Weight of cover and frame approximately 50.75kgs.

All manhole covers and frames shall be supplied, coated with a black bituminous composition and be given two coats of bituminous paint after bedding.

No extra rate is payable for drop and/or junction manholes but piping in and surrounds of drop lines are payable at that relevant rates for s.w piping and manholes.

In drop manholes where the difference in level between the incoming drains and the sewer does not exceed 0.610m in 75mm and there is sufficient room in the manhole, the connecting pipe may be brought directly through the manhole wall, and the fall accommodated by constructing a ramp in the benching of the manhole. The ramp shall be of concrete and finished equal to that of the benches. No extra rate is payable.

17.27 Interceptor Manhole

17.27.1 All gravity sewer lines should be, connected through an intercepting inspection chamber before connecting to the main sewer line, and the dimensions of the manhole and trap to be in conformity with FENAKA.

17.28 Fixtures and Accessories

17.28.1 All sanitarywares shall be manufactured by one of the following manufacturers.

1. American Standard
2. Ideal Standard
3. American Briggs
4. Armitage Shanks
5. Cotto
6. Star sanitaryware

Sanitary ware from manufacturers not listed above shall only be used with prior written approval of the Consultant

17.29 As built Drawings

The Plumbing Contractor, shall mark down with red pencil on two sets of plumbing plans all the revisions, omissions and/or additions to the various plumbing installation drawings as the construction progress. One set of the plans as marked shall be submitted to the Consultant after completion of the work.

Before the final payment is made to the Contractor, he shall submit to the Project manager through the consultant, all As-Built Drawings incorporating the changes made and noted in the marked plans retained by him. The As-Built Drawing incorporating all the changes made and noted in the marked plans retained by him. The As-Built Drawings shall be prepared on reproducible form

The Plumbing contractor shall prepare and submit the As-Built Drawings without extra cost to the Project manager.

17.30 Miscellaneous

Throughout the construction period, open ends of all installed pipelines shall be kept closed by temporary plugs. Drainage lines shall not be used to conduct dirty construction wash-washer, especially, those with cement, to avoid possible clogging.

A temporary fire protection system at each building shall be provided by the Contractor during the construction period. This shall be of sufficient capacity to put out any fire that may break out at any of the building floors due to construction period. This in addition to temporary fire extinguishers required.

A temporary potable water supply shall be available to construction workers at each building floor as construction work progresses.

A temporary human Excrete Disposal System shall be provided by the Contractor to serve the workers during the construction period.

18. ELECTRICAL INSTALLATIONS

18.1 General

18.1.1 The work shall be carried out strictly in accordance with the standard specifications and shall
also conform to the requirements of Electricity Rules in force in Male', Republic of Maldives

18.1.2 All materials to be used in the Works shall be of standard make and shall bear the certification marks of local authorities. All materials shall be approved by the Consultant before use in the Works.

18.1.3 Earthing shall invariably be done in the presence of the Consultant or his representative.

18.1.4 All the conduits shall be continuously earthed. Check nuts shall be provided at the point where the conduct enter the I.C. box and junction box.

18.1.5 The Contractor shall arrange for the inspection of all Medium Pressure Installation by the Electrical inspector of the local electric supply authority from where the electricity connections has to be obtained, and see that they are passed by him.

18.1.6 The Contractor shall be responsible for all necessary permits, approvals, fees, deposits etc., required to complete the Electrical works in accordance with the Contract.

18.1.7 Scope of work

18.1.7.1 The work consist of furnishing all tools, plants, labour, materials and equipment and performing the internal electrical Works comprising of:

(a) Light and power wiring
(b) Fans and fixtures
(c) Wires and Cables
(d) Telephone System
(e) Sub- Station Equipments:
(f) Distribution Fusegear
(g) Earthing System
(h) Lightening Protection System
(i) Fire Alarm System
(j) Air Conditioning System
(k) Computer Network Cabling outlet work

18.1.8 Prequalification

18.1.8.1 The Electrification Work shall be carried out only by a licensed contractor authorized to under take such work under the Maldives Energy Authority

18.1.9 Qualification

18.1.9.1 A licensed Electrical Contractors should have the following qualifications:

(a) Must have in his employment a competent Electrical Engineer registered with Maldives Energy Authority
(b) Must have in its employment an Electrical Consultant having certificate of competency who will exclusively supervise this work.
(c) Must have necessary tools, plant and instruments.
(d) Must have adequate experience of similar works.
(e) If a contractor does not posses the above qualifications he shall be allowed

to sublet the Work to a competent Sub-Contractor provided an application for his prequalification is made to the engineer for his approval. Decision of the Engineer in this case shall be binding on the Contractor.

18.1.10 Rules and Regulations

18.1.10.1 The installation in general shall be carried out in conformity with the Electricity Rules, 1937 (UK), and the latest edition of the Regulations for the Electrical Equipment of Buildings issued by the Institution of Electrical Engineers, London (I.E.). However, in case of conflict between these Specifications and the I.E. Regulations, these Specifications shall be followed.

18.1.11 Standards

18.1.11.1 The latest relevant British Specifications, and I.E. recommendations shall be applicable and be followed for the equipment specified herein.

18.1.12 Climatic Conditions

18.1.12.1 All equipment supplied shall withstand, without developing any detect, the following climatic conditions:-

Maximum Ambient Temperature = 113° F or 45° C

Minimum Ambient Temperature = 28° F or - 2.2° C
Maximum Humidity = 98%

18.1.13 Specifications

The Contractor shall furnish all material and equipment at site, confirming fully to the specifications given herein and to the accepted standards, the Institution of Electrical Engineers and the Maldives Energy Resource Unit.

It is not the intent of these Specifications to include all details of design and construction of various material and equipment to be supplied under this contract.

The Contractor shall supply and install all material and equipment specified herein and also all installation and small material such as nuts, bolts, washers, shims angles, leveling material, insulation, tape, solder , etc. and all such required for complete installation as intended by the Specifications.

The contractor shall provide for all the required technical and non - technical personnel, skilled and non - skilled labour, construction equipment, transportation etc., as required for the completion of Work in strict accordance the Technical Specifications laid herein-after.

All material and equipment supplied by the Contractor shall be new and in all respects conforming to the high standard of engineering design and workmanship.

All material and equipment which have to be supplied and installed by the Contractor shall be passed/approved by the Consultant; even if the same is exactly in accordance with the Bill of Quantities and Drawings.

18.1.14 Submittal

18.1.14.1 The Contractor, after the award of work, shall submit for approval of the Consultant all drawings and cuts of equipment, appliances, fixtures and accessories. Cuts, catalogues and drawings shall be clearly marked to indicate, the items furnished.

18.1.15 Approval of Drawings and Data

18.1.15.1 The Contractor shall provide detailed electrical drawings, wire diagrams, etc. for all electrical switchgear, fusegear and all other systems etc. for the Consultant to review and approval. Three sets of equipment drawings shall be provided for obtaining approval.

18.1.16 Drawings & Data

18.1.16.1 Three sets of drawings and data for each equipment shall be furnished by the Contractor for the Consultant approval before commencement of work. The drawings to be supplied by the Contractor shall be as follows:-

Electrical Drawings showing:-
(a) Single-Line diagram
(b) Detailed wiring diagram
(c) All interconnections
(d) Relays, their locations, and internal wiring diagrams
(e) Other electrical devices including meters instruments and their wiring diagram

18.1.17 Shop Drawings

18.1.17.1 The design drawings do not show conduit routes and depict only the position of various fixtures and outlets. All the planning for the conduit routes shall be carries out, well in advance of the actual execution of work, by the Contractor to the satisfaction of the Consultant. For this purpose the Contractor shall prepare shop drawings and obtain prior approval of the Consultant. There prints of each shop drawings shall be submitted for obtaining approval. work.

No piece of work shall be allowed to be executed at site without the availability of these approved shop drawings. These shop drawings shall clearly depict the load balancing chart of each Distribution Board.

Time required for the preparation and approval of shop drawings shall be considered to have been included in the total time allowed for the completion of the work.

18.1.18 Spare Parts list

18.1.18.1 A list of spare parts required for the one year’s operation of each equipment where deemed necessary together with unit price of each part, shall be supplied by the contractor.

18.1.19 Guarantee

The Contractor shall furnish written guarantee in triplicate of the manufacturer for successful performance of each equipment. Such guarantee shall be for replacement which may be found defective in material or workmanship.

The guarantee shall cover a minimum period of 12 months effective from the date of completion certificate.

18.1.20 As-Built Drawings

The Contractor shall, during the progress of work keep a careful record of all changes and revisions where the actual installation differs from that shown on shop drawings. These changes and revisions shall be accurately carried out on the shop drawings and submitted to the Consultant for approval. After approval these drawings shall become the property of the Project manager. These updated and approved shop drawings depicting clearly all changes and revisions made on site shall be called As-Built Drawings.

18.1.21 Test Reports

18.1.21.1 The Contractor shall be responsible for the submitting the test reports/certificates and get the installation inspected passed by the Maldives Energy Authority

18.2 Conduit And Conduit Accessories

18.2.1 Conduit Pipe

18.2.1.1 The conduit for the wiring of lights, socket outlets and other systems shall be made of PVC confirming to BSS 3505/1968 Class-D.

The conduit shall have following wall thickness and standard weights:

Pipe Size	Wt/100Rft.	Wall thickness
20mm dia	3.4 Kg	0.04 to 0.05
25mm dia	4.5 Kg	0.045 to 0.055

18.2.1.2 Steel conduit shall conform to BSS 31/latest. The conduit shall be enameled with good quality non- cracking and non-flaking black paint.

18.2.1.3 The wires running throughout the ceiling and walls should be inside hard conduit.

18.2.2 Conduit Accessories

The use of factory made round PVC junction boxes shall be used and should have nipples to receive PVC pipe with force fit, shall be used for ceiling outlets. The wall type junction box shall also be PVC.

Each junction box shall be provided with one piece cover which shall be fitted on the box with screws.

18.2.2.3 Conduit accessories such as switch boxes, socket outlet boxes, pull boxes and inspection boxes shall be made of PVC having dust tight covers. All boxes shall have required number of conduit entry holes. All the rectangular or square shaped boxes shall have nipples to receive PVC conduit force fit.

Manufactured smooth bends shall be used where conduit changes direction. Bending of Conduit by heating or otherwise shall be allowed only at special situations with the permission of the Consultant. Use of sharp 90 degree bends and tees is prohibited.

Bends shall have enlarged ends to receive the conduit without any reduction in the internal diameter of the PVC pipe.

18.2.2.5 All accessories e.g. boxes, coupling, bends, solid plugs, bushes, reducers, checknuts etc. shall be equal in quality to the specified conduit.

18.2.2.6 The drawings do not show conduit routes and all the planning for arranging conduit routes shall be carried out by the Contractor to the satisfaction of the Consultant.

18.2.2.7 The entire conduit system shall be essentially completed before the wiring pulling is taken in hand. Each conduit run shall be tested for continuity and obstructions. All obstructions shall be cleared in an approved manner. Water and moisture that has entered any section of the conduit installation must be dried with suitable swabs to the satisfaction of the Consultant.

18.2.2.8 Adequate expansion joints shall be provided in all conduit runs passing across the expansion joints in the concrete slab of the buildings.

18.2.2.9 All the free ends of conduit shall be solidly plugged till such time as final and proper terminations are made.

18.3 Wires, Cables And Cords

18.3.1 Wires & Cords

The wires & cords for the conduit wiring shall be single core, made of stranded copper conductors, PVC insulated, tested to B.S. 6004, 1975. The voltage grade shall be 300/500 volts or 450/750 V unless otherwise specified on Drawings and Bills of Quantities.

All the wire and cables shall be of the approved standard of Maldives Energy Authority

(a) For light or fan point wiring with 1.5 mm square or as specified in the BOQ.

(b) For light circuit wiring with 1.5 mm square or as specified in the BOQ.

(c) For power plug 15A wiring with 4mm square or as specified in the

BOQ. Wires used must be 2.5sqmm(7/0.67mm) unicable or a wire of the same standard.

18.3.2 Installation Instructions

18.3.2.1 All wiring shall be continuous between terminations and use of connectors or joints is not be allowed. Spur and tee connections are strictly prohibited.

18.3.2.2 Manufacturers recommended lubricant shall be allowed to facilitate pulling of wires. Use of any kind of oil and soap is prohibited.

18.4 Wiring Accessories

18.4.1 Switches

8.4.1.1 Indoor switches controlling lights and fans shall be single pole, 5A, one or two way, suitable for 250V,50 Hz. The body of the switches shall be made of moulded plastic, one, two, three or four gang with integral built in moulded plastic face plate.

8.4.1.2 Weatherproof switches shall conform to B.S. standard.

18.4.2 Switch Socket Outlet Units

18.4.2.1 Switch & socket units shall be single, pole, 3 pin rated 5A. 15A or 20A, 250V, 50 Hz. These shall be moulded plastic type with white integral built-in face plate. Each socket shall have its control switch by the side of it on a common face plate. Thus the complete unit specified in BOQ shall be as switch and a socket outlet unit.

18.4.2.2 All the circuits, sockets, switches, ELCB and MCCB must use Legrand or products in equivalent standards to this.

18.4.2.3 Waterproof sockets must be used for areas which come in contact with water or water motors.

18.4.2.4 All the lights and sockets inside and outside the building must follow the Maldives Electricity Bureau regulations while placing the circuit. (13Ampere with 2 socket- 1 circuit, 15Ampere with 1 socket and one circuit, and for six fans or 6 lights, there must be one circuit placed)

18.4.2.5 Lights should have a circuit of 6 Amperes, and normal sockets should have a Socket of 10 Amperes. Air conditioner and high voltage appliances must have a circuit of 15 Amperes.

18.4.3 Fans

18.4.3.1 All fans shall be capacitor type Deluxe models or equivalent and suitable for operation on 200/220 volts, 50 Hz, A.C Supply. All ceilings fans shall have five speed dimmers. The air displacement shall be 10,000 c.f.m for 48” (1219 mm) Sweep and 12,000 c.f.m. for 56” (1423 mm) Sweep at maximum speed. The fan motor shall be capacitor type and bearings shall be groove type to give noiseless and quiet operation. The noise level relative to a frequency of range 1000 Hz should be within the limits of +3 dB.

18.4.3.1 Ceiling fans used must be at least 1400mm in diameter and from Usha brand or equivalent to this

18.4.3.2 Exhaust fans used must be plastic

18.4.4 Dimmer

18.4.4.1 The dimmer shall be recessed type as required and shall be approved by the Consultant.

18.4.5 Fan Hook

The fan hook shall be made of 12 dia mild 5/5 steel rod bent to shape of approved design. It should be in the form of a loop about 3-1/4” (87.5 mm) long and about 2” (50 mm) wide. The rod shall be bend to have at least 8” (200 mm) extension on both sides for tieing to the reinforcement steel of the slab. All ceiling fan shall be of one make only.

The fan hook shall be installed in the RCC slab of the ceiling at the time of pouring concrete.

18.5 Light Fixtures

18.5.1 General

The description of light fixtures is given in the Bills of Quantities, and stated on the Drawings, and all relevant material are described in this Section.

The determination of quality is based on certified photometric data covering the coefficient of utilization, light distribution curves, construction material, shape, finish, operation, etc.

18.5.1.3 The Contractor shall submit samples of each and every lighting fixture specified for approval of the Consultant.

18.5.1.4 The type of fixtures with manufacturer catalogue reference are given in Bill of Quantities.

18.5.1.5 The lighting fixtures shall be manufactured by M/s. Philips, M/s.RZB Lighting, M/s Thorn or equivalent as approved by Consultant.

18.5.2 Incandescent Light Fixture

The glass globes/ shades/ diffusers of the incandescent light fixtures shall be first class quality glass free from any air bubbles or voids. The glass shall generally be of opal white colour unless otherwise specified. The shape of the glass may be spherical, hemispherical, flattened bottom or tablet shaped as required.

Surface mounted fixture shall have stove enamelled sheet steel body. It may also be satin brass or aluminium anodised finish as required. The fixing holes shall match the outlet box. Wall bracket light fixtures shall have back plates with matching holes of the outlet box and decorative finish as required.

All the lighting fixtures shall be suitable for local climatic conditions.

18.5.2 Fluorescent Light Fixture

All the light fixtures shall have lamps and electronic ballasts of the wattage specified. The fluorescent lamp shall be either 2 ft - 18 watts or 4 - 35 watts and the colour shall generally be day light, cool day light in the order of preference or as mentioned specifically.

The fluorescent lamps shall be Philips to BSS 1853 but having a minimum useful life of 5000 hours. The new generation of 26mm dia 18 watts and 36 watts energy efficient lamps shall be preferred.

The ballast shall be totally enclosed electronic type suitable for operation on 220 V, 50 Hz, single phase supply, a wiring diagram, wattage, voltage and current ratings shall be printed on the body of the ballasts. The power loss shall not more than 10 watts for 36 watts ballast. The ballast shall be noiseless in operation without any whistling sound.

The manufacture shall be called upon to guarantee a trouble free life of 3 years, effective from the date of completion certificate.

18.5.2.5 The starters shall have radio-interference suppressers.

18.5.2.6 The internal wiring of the light fixtures shall be carried out at manufacturers factory with heat resistance wires of size not less than 1.5 mm square.

18.5.2.7 The louvers of light fixtures shall be made of anodized aluminium and/or moulded plastic. The diffusers shall be made of acrylic perspex.

18.5.2.8 All the lighting fixtures shall be suitable for local climatic conditions.

18.5.3 Installation Instructions

18.5.3.1 The light fitting shall be installed according to manufacturers recommendations or as approved by the Consultant.

18.5.3.2 Flexible connecting wires from outlet box to the fixture shall be provided by the contractor; connector made of porcelain or thermoplastic material shall be provided and installed in the outlet boxes for connecting flexible wires to the point wires.

18.5.3.3 Outlet boxes or any openings in the ceilings and walls shall be covered with appropriately fabricated accessories to provide an architectural entity to conceal them.

18.5.3.4 All the lights outside the building and in the garden should be in accordance with the drawings with photocell switches placed.

18.5.3.5 Each light should be assigned to a different switch. Each switch should light up one light only.

18.5.4 Main L.T. Switchboard

The L.T. switchboard shall be indoor type, free standing, free supporting, floor mounted, totally enclosed, sheet cald, dust and suitable for operation on 3 phase 4 wire system, 415 v , 50 Hz, AC supply .

The board shall be suitable for installation back to the wall and capable of front attendance. The switch board shall be designed to suit service conditions and ensure security and safety during operation , inspection , operation , cleaning and maintenance.

The switch board shall be designed and tested to IEC recommendations. Each panel shall withstand strain of 2000 volts insulation level for one minute power frequency test.

18.5.4.4 The L.T. switch board shall consist of the following: Maldives Energy Resource Unit incoming panel.

KWh meters (To be approved and checked by MEB)

Out going distribution feeders.

18.5.5 Distribution Feeder Panel

18.5.5.1 Single line diagram of the L.T. switch board shall be approved by the consultant and Maldives Electricity Bureau before placing order for the switch board.

18.5.6 Earthing

18.5.6.1 The switchboard shall be effectively earth by means of a copper strip of 25mm x 3mm (1” x 1/8”) cross -section bolted to connections near the bottom of the switchboard.

18.5.7 Accessories

18.5.7.1 Designations labels, lifting lugs , foundation bolts, interconnecting nuts blots, and washers, thimbles, lugs, levelling shims cable glands and/or cable end box for all the sizes of incoming and outgoing cable shall be supplied with the switchboard.

18.6 Testing

The following tests shall be conducted on each completed switchboard.

18.6.1.1 Type Tests

(a) Temperature rise test

(b) Mechanical endurance test Making/Breaking Capacity test

18.6.1.2 Routing Test

High Voltage test

18.6.2 The Switchboard shall be tested to British/Electricity Council Standard 41-5. Preference shall however, be given to Switchboards fabricated from all components manufactured by only one manufacturer.

18.7 Installation Instruction

All labour, equipments, tools and plants required to complete the installation shall be provided by the contractor. The Switchboard shall be fixed firmly on the floor in perfect line, plumb and level position.

The electrician operating must be someone who has permission from the Maldives Energy Authority Under no circumstances should someone without permission carry put the work.

After electrical connections are placed and wire testing is done, the STELCO certificate copy must be submitted to the consultant and client.

Before materials are bought for electrical wiring, it should be presented to the client and their approval must be obtained.

All incoming and outgoing cable connections shall be made from the bottom including Earth connections.

18.8 Distribution Board

18.8.1 The distribution boards shall be either free standing, cubical type or wall mounting type suitable for recessed mounting. Each distribution board (d.b.) shall be tropical in design, fully dust and vermin proof and liquid repellent.

18.8.2 Distribution box(DB) used must be wall embedded. Under no circumstances should any other box be used

18.8.3 After the electrical wiring has been completed, the connection shall be taken from the main switch board to the distribution board. The thickness of the cable shall be approved by the consultant. Hence, the scope of work includes the installation of DB cables, burying of cables and other respective tasks should be carried out.

18.9 Telephone System

18.9.1 General

The design drawings do not show conduit routes and depict only the position of various telephone outlets. All the planning for the conduit routes shall be carries out, well in advance of the actual execution of work, by the Contractor to the satisfaction of the Consultant. For this purpose the Contractor shall prepare shop drawings and obtain prior approval of the Consultant. Three prints of each shop drawings shall be submitted for obtaining approval before commencement of work.

No piece of work shall be allowed to be executed at site without the availability of these approved shops drawings. Time required for the preparation and approval of shop drawings shall be considered to have been included in the total time allowed for the completion of the work.

The contractor shall furnish and install the type of Telephone outlets approved by Dhiraagu. All the floor mounted telephone boxes shall be concealed in a PVC box with opennable cover for easy access.

Both ends of each set of conductors shall be properly identified with durable tags with the same identifications of both ends, at the outlet and the telephone terminal cabinets to facilitate the installations of the telephone instrument in the future and for trouble shouting purposes. Cable used shall be twisted and shielded 3 cables in the office area and the rest as shown in the drawing.

Proposed Office block, Staff room, AV room, Science lab & 4 Classroom at M.Mulaku School

(03 Storey)

ARCHITECTURAL & STRUCTURAL DRAWINGS

Client: Ministry of Education

RIYAN PRIVATE LIMITED

t : +9603315049   f : +9603310776
e : info@riyan.com.mv
w : www.riyan.com.mv
3rd floor, H. Azum, Ameeneemagu, Male'

The contents of these drawings remain as a property of Riyan Private Limited. Any use other that those expressly stated is a violation of this copyright

TABLE OF CONTENTS

DRAWING No.	TITLE	REVISION No.	DATE	REMARKS
ARCHITECTURAL		---	---	---
A - 01 /26	SITE PLAN	---	---	---
A - 02 /26	GROUND FLOOR PLAN	---	---	---
A - 03 /26	FIRST FLOOR PLAN	---	---	---
A - 04 /26	SECOND FLOOR PLAN	---	---	---
A - 05 /26	ROOF PLAN	---	---	---
A - 06 /26	ELEVATION E1	---	---	---
A - 07 /26	ELEVATION E2	---	---	---
A - 08 /26	SECTION X-X	---	---	---
A - 09 /26	SECTION Y-Y	---	---	---
A - 10 /26	DOOR & WINDOW SCHEDULE - 1	---	---	---
A - 11 /26	DOOR & WINDOW SCHEDULE - 2 & VENTILATION SCHEDULE	---	---	---
A - 12 /26	GROUND FLOOR - FLOOR FINISHES PLAN	---	---	---
A - 13 /26	FIRST FLOOR - FLOOR FINISHES PLAN	---	---	---
A - 14 /26	SECOND FLOOR - FLOOR FINISHES PLAN	---	---	---
A - 15 /26	GROUND FLOOR - REFLECTED CEILING PLAN	---	---	---
A - 16 /26	FIRST FLOOR - REFLECTED CEILING PLAN	---	---	---
A - 17 /26	SECOND FLOOR - REFLECTED CEILING PLAN	---	---	---
A - 18 /26	DETAIL - 1 : STAIRCASE DETAILS	---	---	---
A - 19 /26	DETAIL - 2 :MAIN ENTRANCE RAMP DETAILS	---	---	---
A - 20 /26	DETAIL - 3 :TOILET DETAILS	---	---	---
A - 22 /26	DETAIL - 4 :RC FIN DETAILS	---	---	---
A - 23 /26	DETAIL - 5 :RC FIN DETAILS	---	---	---
A - 24 /26	DETAIL - 6 :RAILING DETAILS	---	---	---
A - 25 /26	DETAIL - 7 :RC WALL DETAILS	---	---	---
A - 26 /26	DETAIL - 8 :NAME BOARD DETAILS	---	---	---
STRUCTURAL		---	---	---
S - 0 / 13	GENERAL NOTES	---	---	---
S - 01 /13	FOUNDATION PLAN	---	---	---
S - 02 /13	GROUND & SECOND FLOOR COLUMN LAYOUT PLAN	---	---	---
S - 03 /13	FIRST FLOOR COLUMN LAYOUT PLAN	---	---	---
S - 04 /13	FIRST - SECOND FLOOR BEAM PLAN	---	---	---
S - 05 /13	STORE / HALF LANDING FLOOR BEAM & SLAB REIN. PLAN	---	---	---
S - 06 /13	FIRST - SECOND FLOOR SLAB REINFORCEMENT PLAN	---	---	---
S - 07 /13	ROOF BEAM PLAN - 1 (+9150)	---	---	---
S - 08 /13	ROOF BEAM PLAN - 2 (+9706)	---	---	---
S - 09 /13	ROOF TRUSS AND FRAMING PLAN	---	---	---
S - 10 /13	ROOF TRUSS DETAILS	---	---	---
S - 11 /13	STRUCTURAL DETAILS - 1	---	---	---
S - 12 /13	STRUCTURAL DETAILS - 2	---	---	---
S - 13 /13	STRUCTURAL DETAILS - 3	---	---	---

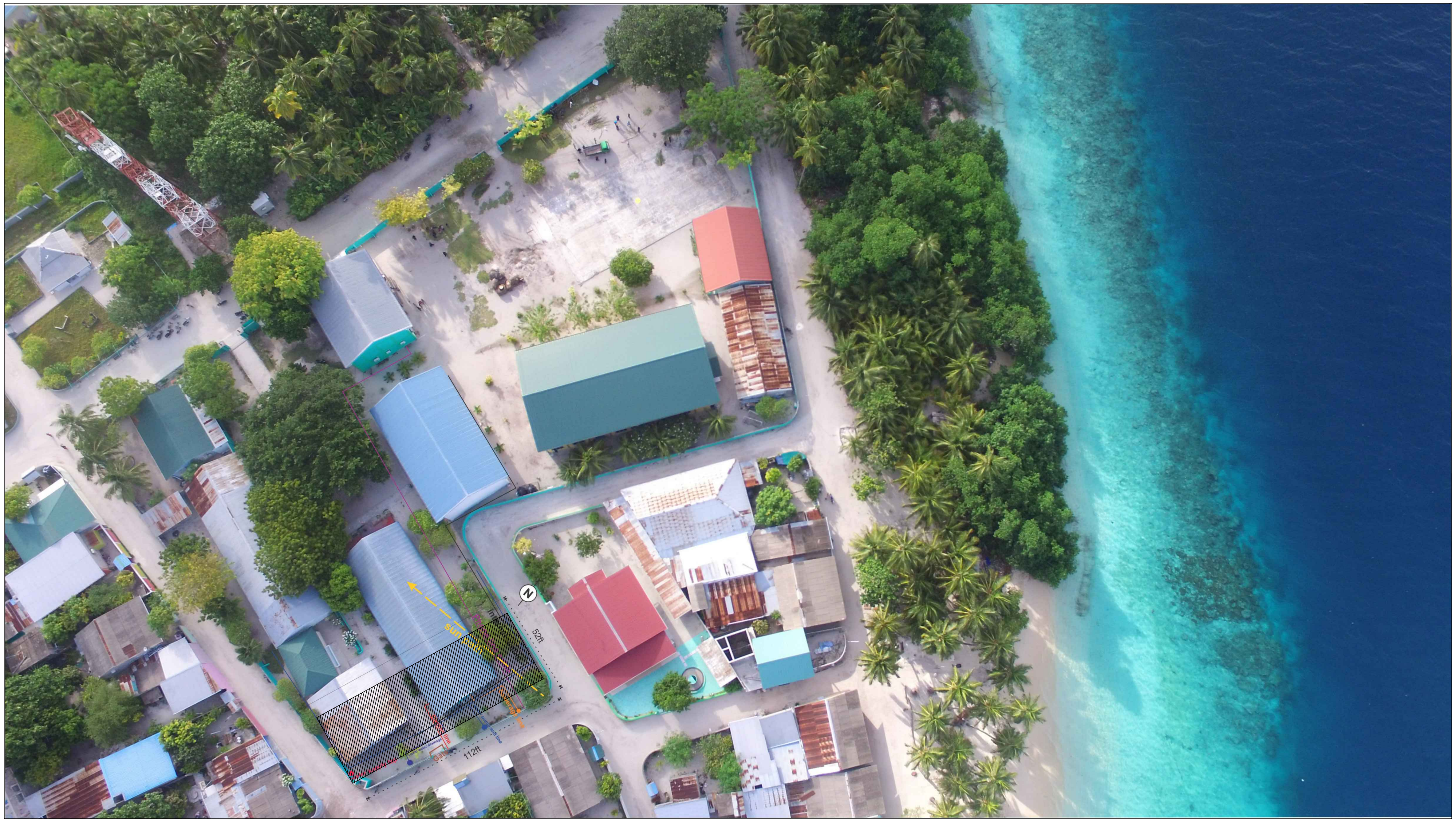
N
sun path
Internet cable
52ft
sewerage line
water pump and line
storm water drainage
line
Gate
112ft

NOTE:

▨ PROPOSED BUILDING LOCATION

EXISTING TREES AND INFRASTRUCTURES TO BE REMOVED AS PER THE SITE PLAN (TO BE CONFIRMED AT SITE)

SITE PLAN

NTS

M.Mulaku School (3 story)
Client: Ministry of Education

Project Number: RI/2020/006
Date: June 2021
Architect : Mariyam Irasha Shareef
Engineer : Mohamed Muththalib Waleed
Drawn by : Mariyam Leevan Jaleel
Services : Aishath Ahmed
Interior : -

Rev no	Date
--	-----------
--	-----------
--	-----------
--	-----------

RIYAN PRIVATE LIMITED

t : +9603315049 f : +9603310776
e : info@riyan.com.mv
w : www.riyan.com.mv
3rd floor, H. Azum, Ameeneemagu, Male'

Title: Site Plan

Page: A-01/26

The contents of these drawings remain as a property of Riyan Private Limited. Any use other that those expressly stated is a violation of this copyright

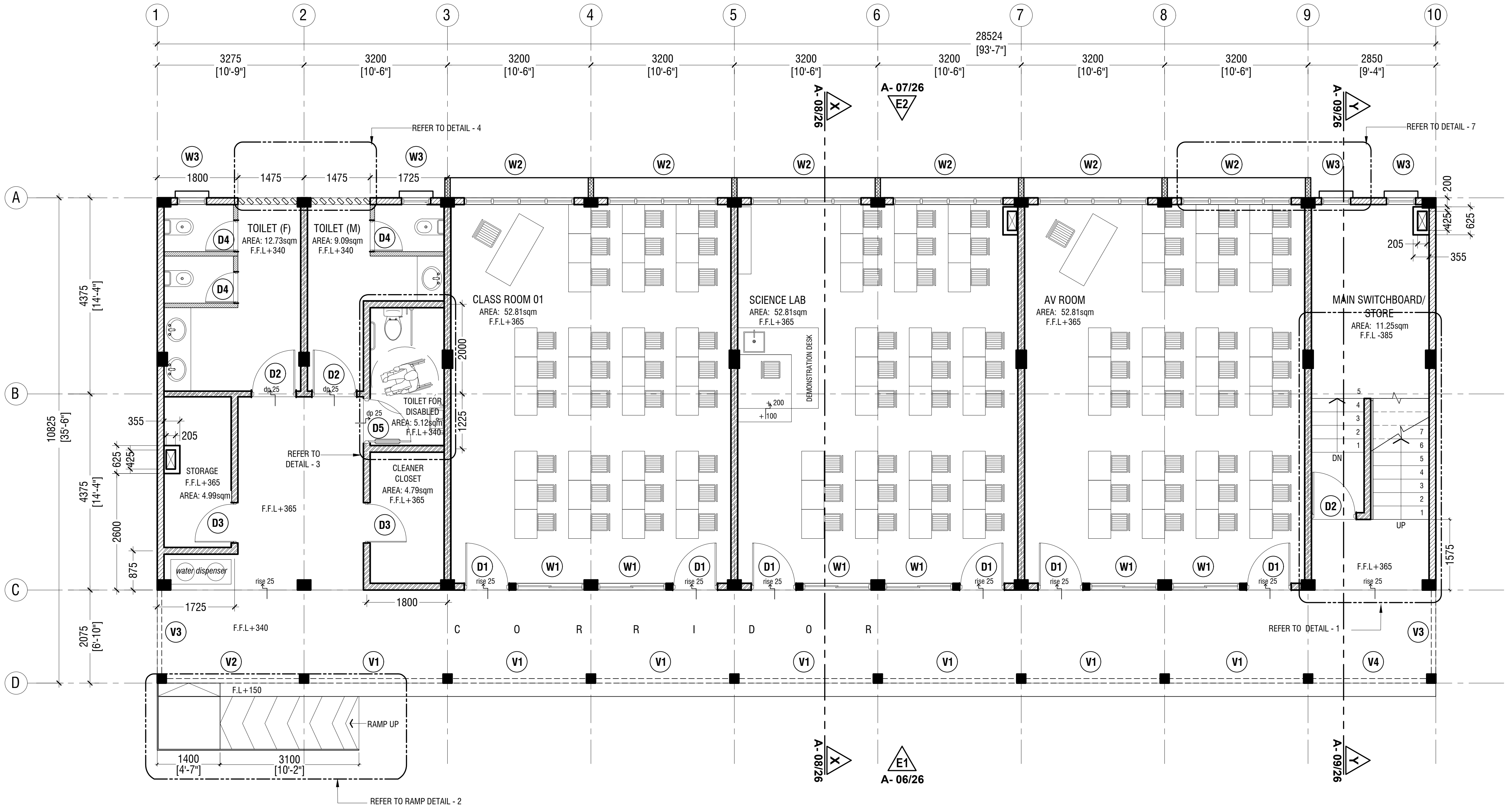
1
2
3
4
5
6
7
8
9
10
A
B
C
D
28524 [93'-7"]
3275 [10'-9"]
3200 [10'-6"]
2850 [9'-4"]
10825 [35'-6"]
4375 [14'-4"]
2075 [6'-10"]
A- 08/26 X
A- 07/26 E2
A- 09/26 Y
A- 06/26 E1
REFER TO DETAIL - 4
REFER TO DETAIL - 7
REFER TO DETAIL - 3
REFER TO DETAIL - 1
REFER TO RAMP DETAIL - 2
W1
W2
W3
D1
D2
D3
D4
D5
V1
V2
V3
V4
TOILET (F) AREA: 12.73sqm F.F.L+340
TOILET (M) AREA: 9.09sqm F.F.L+340
TOILET FOR DISABLED AREA: 5.12sqm F.F.L+340
CLEANER CLOSET AREA: 4.79sqm F.F.L+365
STORAGE F.F.L+365 AREA: 4.99sqm
water dispenser
CLASS ROOM 01 AREA: 52.81sqm F.F.L+365
SCIENCE LAB AREA: 52.81sqm F.F.L+365
DEMONSTRATION DESK
AV ROOM AREA: 52.81sqm F.F.L+365
MAIN SWITCHBOARD/ STORE AREA: 11.25sqm F.F.L -385
DN
UP
F.F.L+365
F.F.L+340
F.L+150
RAMP UP
C O R R I D O R
rise 25
dp 25
1400 [4'-7"]
3100 [10'-2"]

GROUND FLOOR PLAN

SCALE 1:100

0 0.5 1 2 3 4 5

NOTE:

- ▨ PROPOSED 150mm THICK SOLID BLOCK - INTERIOR MASONRY WALL WITH 16mm PLASTERING, GROUND SMOOTH IN SELECTED PAINT FINISH
- ▨ PROPOSED 150mm THICK SOLID BLOCK - EXTERIOR MASONRY WALL WITH 20mm PLASTERING, GROUND SMOOTH IN SELECTED PAINT FINISH
- ▭ PROPOSED 100mm THICK SOLID BLOCK - INTERIOR MASONRY WALL WITH 16mm PLASTERING, GROUND SMOOTH IN SELECTED PAINT FINISH
- ▩ PROPOSED 120mm THICK RC WALL TO BE WATER PROOFED WITH WATER PROOFING AGENT
- ▨ PROPOSED 100mm THICK 2400mm HIGH SOLID BLOCK MASONRY WALL WITH 16mm PLASTERING, GROUND SMOOTH IN SELECTED PAINT FINISH

THE SCREEDING AND TILES ARE INCORPORATED IN THE FLOOR FINISH LEVELS

REFER TO ARCHITECT FOR FURTHER ASSISTANCE.

M.Mulaku School (3 story)
Client: Ministry of Education

Project Number: RI/2020/006
Date: June 2021
Architect : Mariyam Irasha Shareef
Engineer : Mohamed Muththalib Waleed
Drawn by : Mariyam Leevan Jaleel
Services : Aishath Ahmed
Interior : -

Rev no	Date
--	----------
--	----------
--	----------
--	----------

RIYAN PRIVATE LIMITED
t : +9603315049 f : +9603310776
e : info@riyan.com.mv
w : www.riyan.com.mv
3rd floor, H. Azum, Ameeneemagu, Male'

Title: Ground Floor Plan
-

Page: A-02/26

The contents of these drawings remain as a property of Riyan Private Limited. Any use other that those expressly stated is a violation of this copyright

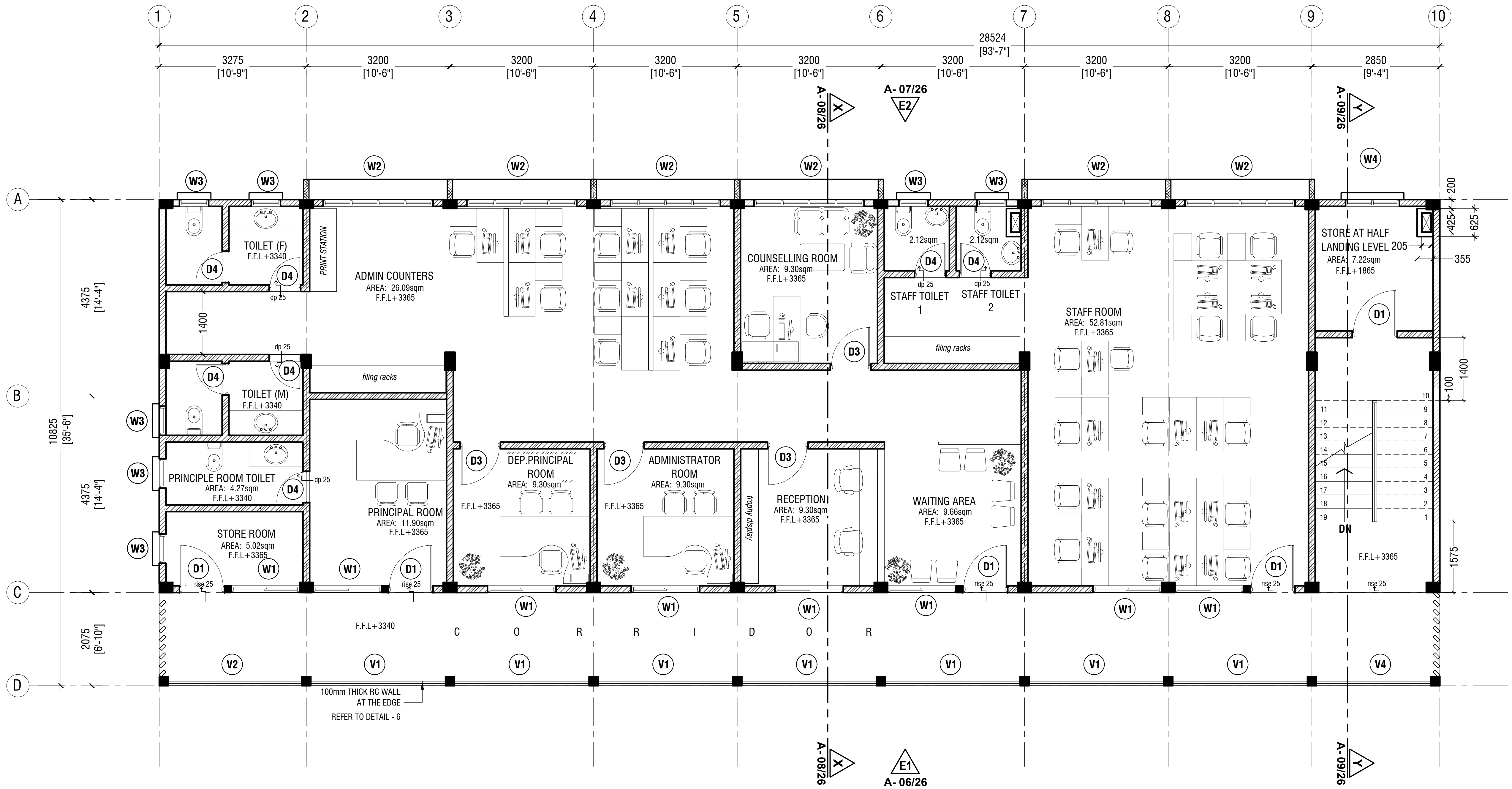
28524 [93'-7"]
3275 [10'-9"]
3200 [10'-6"]
2850 [9'-4"]
10825 [35'-6"]
4375 [14'-4"]
2075 [6'-10"]
A- 08/26
A- 07/26
A- 09/26
A- 06/26
TOILET (F) F.F.L+3340
PRINT STATION
ADMIN COUNTERS AREA: 26.09sqm F.F.L+3365
COUNSELLING ROOM AREA: 9.30sqm F.F.L+3365
STAFF TOILET 1
STAFF TOILET 2
2.12sqm
filing racks
STAFF ROOM AREA: 52.81sqm F.F.L+3365
STORE AT HALF LANDING LEVEL 205 AREA: 7.22sqm F.F.L+1865
TOILET (M) F.F.L+3340
PRINCIPLE ROOM TOILET AREA: 4.27sqm F.F.L+3340
STORE ROOM AREA: 5.02sqm F.F.L+3365
PRINCIPAL ROOM AREA: 11.90sqm F.F.L+3365
DEP.PRINCIPAL ROOM AREA: 9.30sqm
ADMINISTRATOR ROOM AREA: 9.30sqm
trophy display
RECEPTION AREA: 9.30sqm F.F.L+3365
WAITING AREA AREA: 9.66sqm F.F.L+3365
DN
C O R R I D O R
F.F.L+3340
100mm THICK RC WALL AT THE EDGE
REFER TO DETAIL - 6

FIRST FLOOR PLAN

SCALE 1:100

NOTE:

▨ PROPOSED 150mm THICK SOLID BLOCK - INTERIOR MASONRY WALL WITH 16mm PLASTERING, GROUND SMOOTH IN SELECTED PAINT FINISH

▨ PROPOSED 150mm THICK SOLID BLOCK - EXTERIOR MASONRY WALL WITH 20mm PLASTERING, GROUND SMOOTH IN SELECTED PAINT FINISH

▭ PROPOSED 100mm THICK SOLID BLOCK - INTERIOR MASONRY WALL WITH 16mm PLASTERING, GROUND SMOOTH IN SELECTED PAINT FINISH

▩ PROPOSED 120mm THICK RC WALL TO BE WATER PROOFED WITH WATER PROOFING AGENT

▨ PROPOSED 100mm THICK 2400mm HIGH SOLID BLOCK MASONRY WALL WITH 16mm PLASTERING, GROUND SMOOTH IN SELECTED PAINT FINISH

THE SCREEDING AND TILES ARE INCORPORATED IN THE FLOOR FINISH LEVELS

REFER TO ARCHITECT FOR FURTHER ASSISTANCE.

M.Mulaku School (3 story)
Client: Ministry of Education

Project Number: RI/2020/006
Date: June 2021
Architect : Mariyam Irasha Shareef
Engineer : Mohamed Muththalib Waleed
Drawn by : Mariyam Leevan Jaleel
Services : Aishath Ahmed
Interior : -

Rev no	Date
-	-
-	-
-	-

RIYAN PRIVATE LIMITED

t : +9603315049 f : +9603310776
e : info@riyan.com.mv
w : www.riyan.com.mv
3rd floor, H. Azum, Ameeneemagu, Male'

Title: First Floor Plan

Page: A-03/26

The contents of these drawings remain as a property of Riyan Private Limited. Any use other than those expressly stated is a violation of this copyright

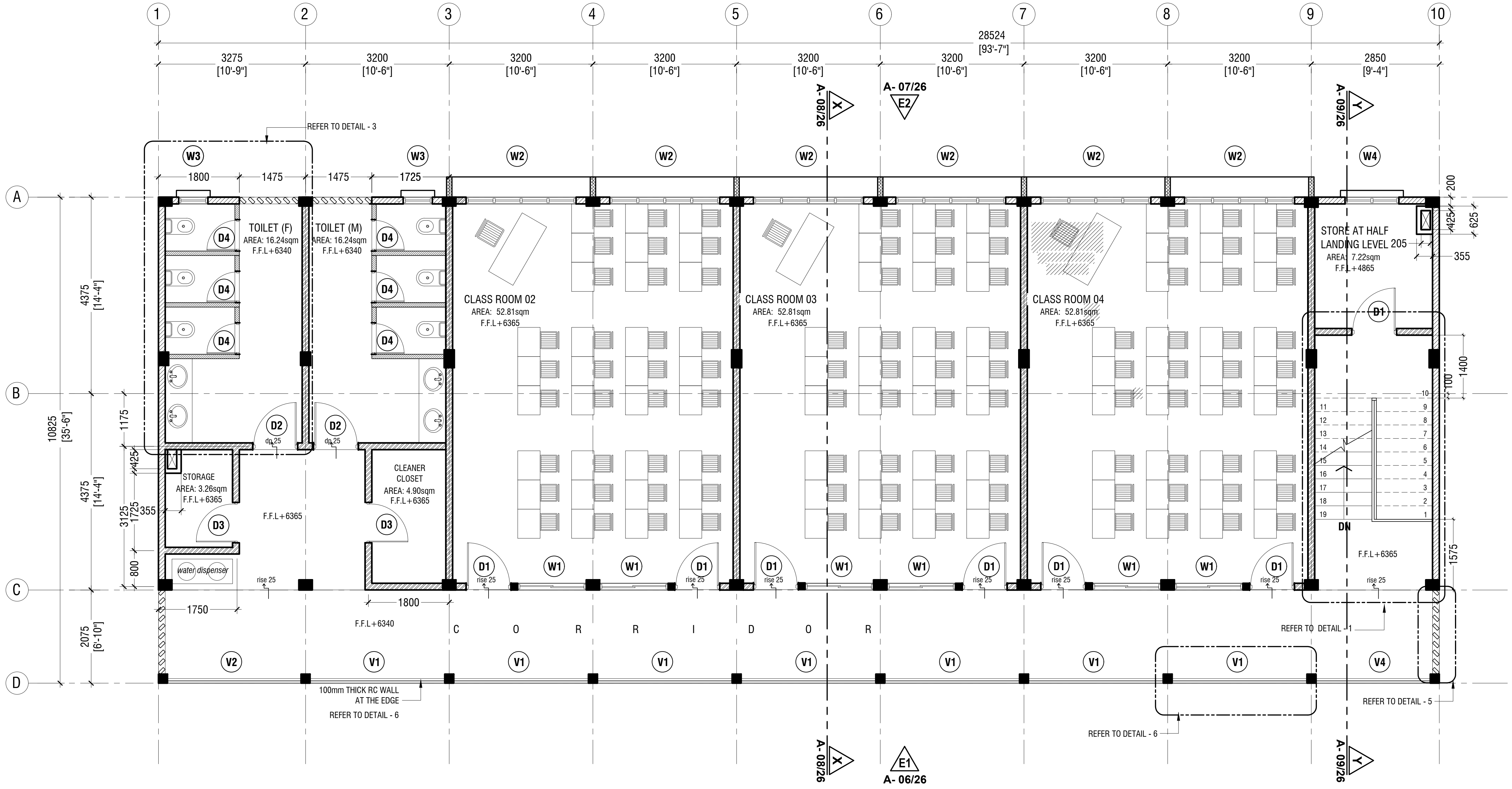
1
2
3
4
5
6
7
8
9
10
28524 [93'-7"]
3275 [10'-9"]
3200 [10'-6"]
2850 [9'-4"]
A
B
C
D
10825 [35'-6"]
4375 [14'-4"]
2075 [6'-10"]
A- 08/26
A- 07/26
A- 09/26
A- 06/26
X
Y
E1
E2
REFER TO DETAIL - 3
W1
W2
W3
W4
V1
V2
V4
D1
D2
D3
D4
B1
TOILET (F)
AREA: 16.24sqm
F.F.L+6340
TOILET (M)
AREA: 16.24sqm
F.F.L+6340
STORAGE
AREA: 3.26sqm
F.F.L+6365
CLEANER CLOSET
AREA: 4.90sqm
F.F.L+6365
water dispenser
CLASS ROOM 02
AREA: 52.81sqm
F.F.L+6365
CLASS ROOM 03
AREA: 52.81sqm
F.F.L+6365
CLASS ROOM 04
AREA: 52.81sqm
F.F.L+6365
STORE AT HALF LANDING LEVEL 205
AREA: 7.22sqm
F.F.L+4865
DN
F.F.L+6365
F.F.L+6340
rise 25
dn 25
C O R R I D O R
100mm THICK RC WALL AT THE EDGE
REFER TO DETAIL - 6
REFER TO DETAIL - 1
REFER TO DETAIL - 5
1800
1475
1725
1750
1175
425
355
3125
800
200
625
1400
100
1575

SECOND FLOOR PLAN

SCALE 1:100

0 0.5 1 2 3 4 5

NOTE:

▨	PROPOSED 150mm THICK SOLID BLOCK - INTERIOR MASONRY WALL WITH 16mm PLASTERING, GROUND SMOOTH IN SELECTED PAINT FINISH
▨	PROPOSED 150mm THICK SOLID BLOCK - EXTERIOR MASONRY WALL WITH 20mm PLASTERING, GROUND SMOOTH IN SELECTED PAINT FINISH
═	PROPOSED 100mm THICK SOLID BLOCK - INTERIOR MASONRY WALL WITH 16mm PLASTERING, GROUND SMOOTH IN SELECTED PAINT FINISH
▩	PROPOSED 120mm THICK RC WALL TO BE WATER PROOFED WITH WATER PROOFING AGENT
▨	PROPOSED 100mm THICK 2400mm HIGH SOLID BLOCK MASONRY WALL WITH 16mm PLASTERING, GROUND SMOOTH IN SELECTED PAINT FINISH

THE SCREEDING AND TILES ARE INCORPORATED IN THE FLOOR FINISH LEVELS

REFER TO ARCHITECT FOR FURTHER ASSISTANCE.

M.Mulaku School (3 story)
Client: Ministry of Education

Project Number: RI/2020/006
Date: June 2021
Architect : Mariyam Irasha Shareef
Engineer : Mohamed Muththalib Waleed
Drawn by : Mariyam Leevan Jaleel
Services : Aishath Ahmed
Interior : -

Rev no	Date
--	-------------
--	-------------
--	-------------
--	-------------

RIYAN PRIVATE LIMITED
t : +9603315049 f : +9603310776
e : info@riyan.com.mv
w : www.riyan.com.mv
3rd floor, H. Azum, Ameeneemagu, Male'

Title: Second Floor Plan

The contents of these drawings remain as a property of Riyan Private Limited. Any use other that those expressly stated is a violation of this copyright

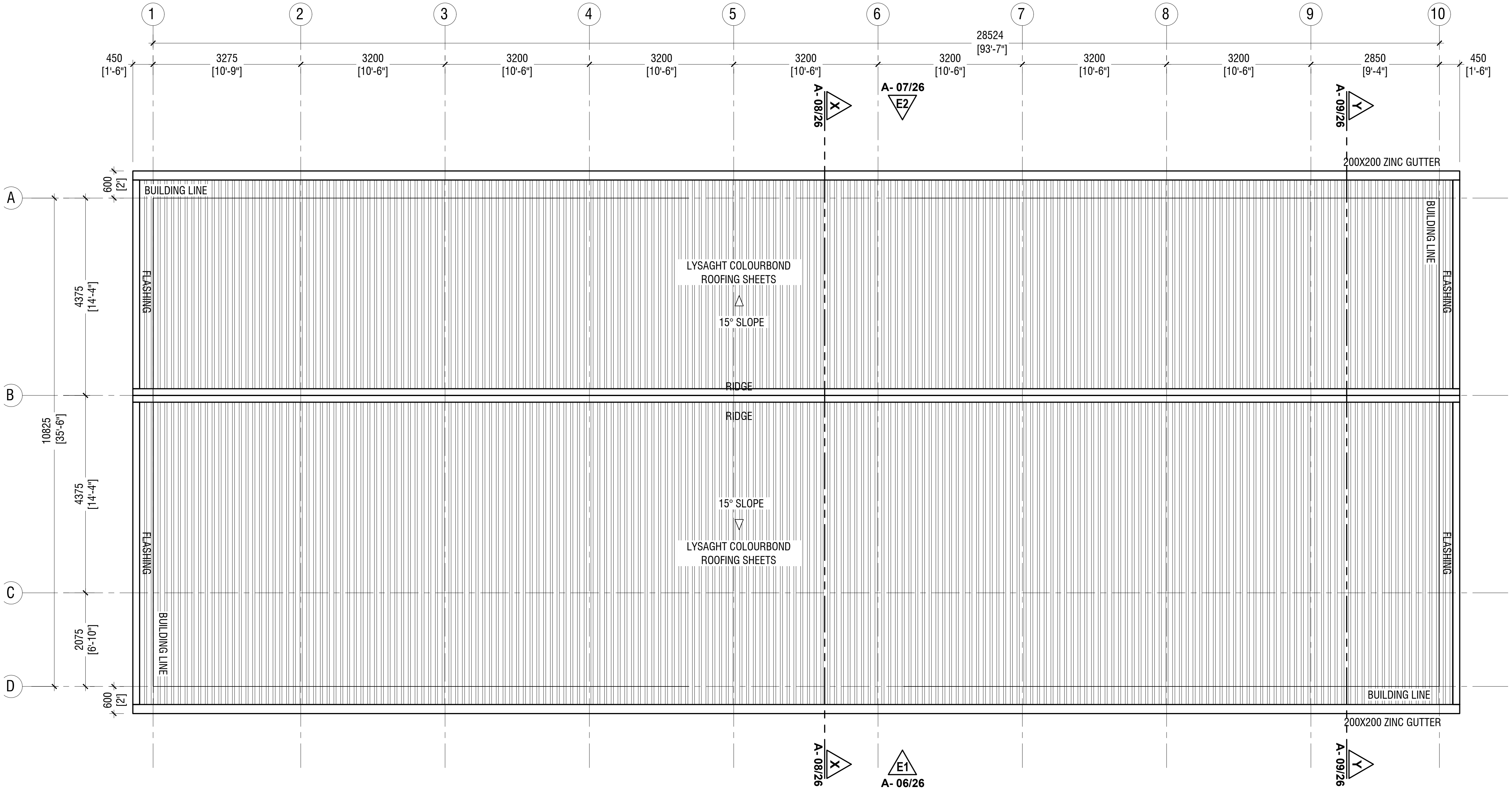
1
2
3
4
5
6
7
8
9
10
28524
[93'-7"]
450
[1'-6"]
3275
[10'-9"]
3200
[10'-6"]
2850
[9'-4"]
A- 08/26
X
A- 07/26
E2
A- 09/26
Y
200X200 ZINC GUTTER
BUILDING LINE
FLASHING
LYSAGHT COLOURBOND
ROOFING SHEETS
15° SLOPE
RIDGE
A
B
C
D
600
[2']
4375
[14'-4"]
10825
[35'-6"]
2075
[6'-10"]
E1
A- 06/26

NOTE:

ROOF SLOPE : 15° SLOPE

ROOF MATERIAL : LYSAGHT COLOURBOND ROOFING SHEETS

ROOF PLAN

SCALE 1:100

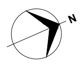

M.Mulaku School (3 story)
Client: Ministry of Education

Project Number: RI/2020/006
Date: June 2021
Architect : Mariyam Irasha Shareef
Engineer : Mohamed Muththalib Waleed
Drawn by : Mariyam Leevan Jaleel
Services : Aishath Ahmed
Interior : -

Rev no	Date
--	-------------
--	-------------
--	-------------
--	-------------

RIYAN PRIVATE LIMITED

t : +9603315049 f : +9603310776
e : info@riyan.com.mv
w : www.riyan.com.mv
3rd floor, H. Azum, Ameeneemagu, Male'

Title: Roof Plan

Page: A-05/26

The contents of these drawings remain as a property of Riyan Private Limited. Any use other that those expressly stated is a violation of this copyright

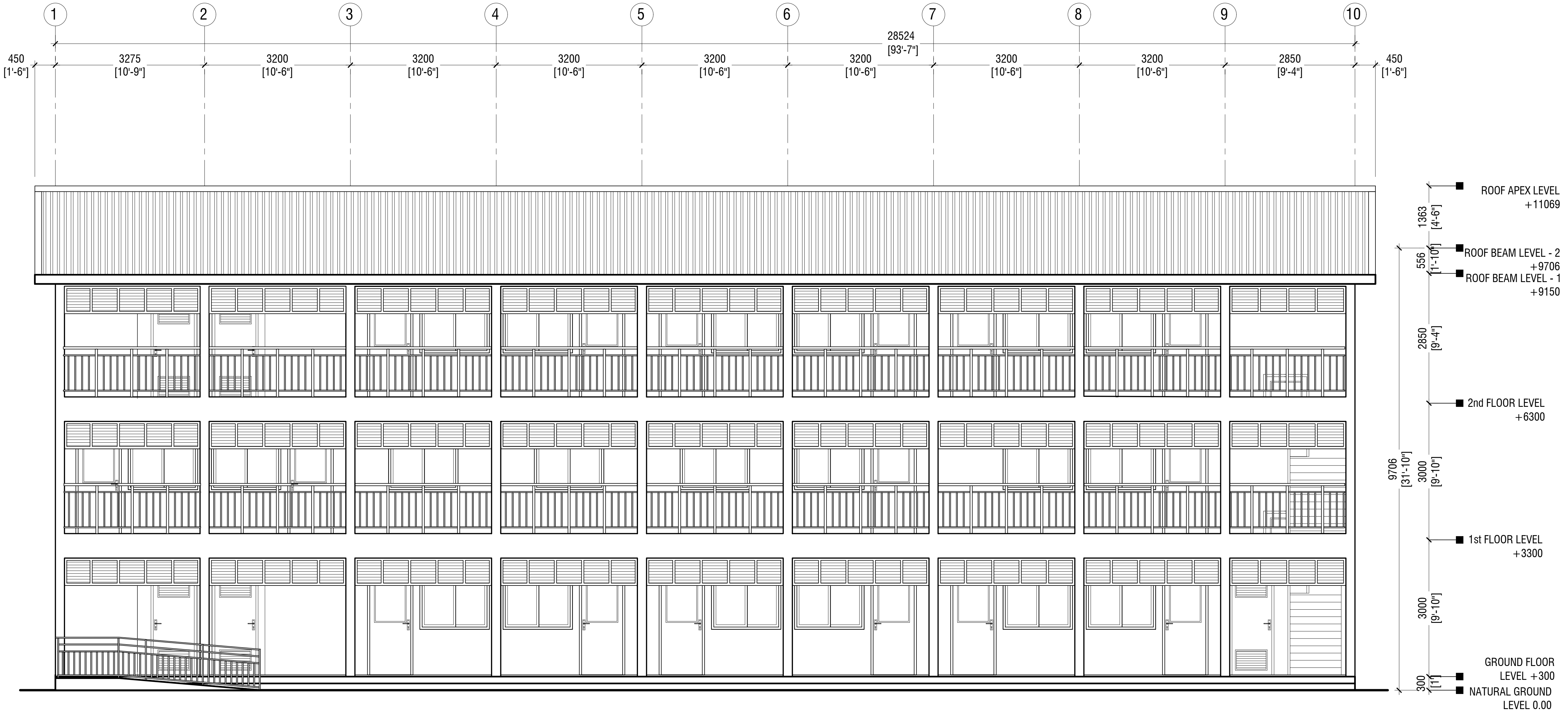
1
2
3
4
5
6
7
8
9
10
28524
[93'-7"]
450
[1'-6"]
3275
[10'-9"]
3200
[10'-6"]
3200
[10'-6"]
3200
[10'-6"]
3200
[10'-6"]
3200
[10'-6"]
3200
[10'-6"]
3200
[10'-6"]
2850
[9'-4"]
450
[1'-6"]
ROOF APEX LEVEL
+11069
1363
[4'-6"]
ROOF BEAM LEVEL - 2
+9706
556
[1'-10"]
ROOF BEAM LEVEL - 1
+9150
2850
[9'-4"]
2nd FLOOR LEVEL
+6300
9706
[31'-10"]
3000
[9'-10"]
1st FLOOR LEVEL
+3300
3000
[9'-10"]
GROUND FLOOR
LEVEL +300
300
[1']
NATURAL GROUND
LEVEL 0.00

ELEVATION E1

SCALE 1:100

M.Mulaku School (3 story)
Client: Ministry of Education

Project Number: RI/2020/006
Date: June 2021
Architect : Mariyam Irasha Shareef
Engineer : Mohamed Muththalib Waleed
Drawn by : Mariyam Leevan Jaleel
Services : Aishath Ahmed
Interior : -

Rev no	Date
--	------------
--	------------
--	------------
--	------------

RIYAN PRIVATE LIMITED

t : +9603315049 f : +9603310776
e : info@riyan.com.mv
w : www.riyan.com.mv
3rd floor, H. Azum, Ameeneemagu, Male'

Title: Elevation - E1
-

The contents of these drawings remain as a property of Riyan Private Limited. Any use other that those expressly stated is a violation of this copyright

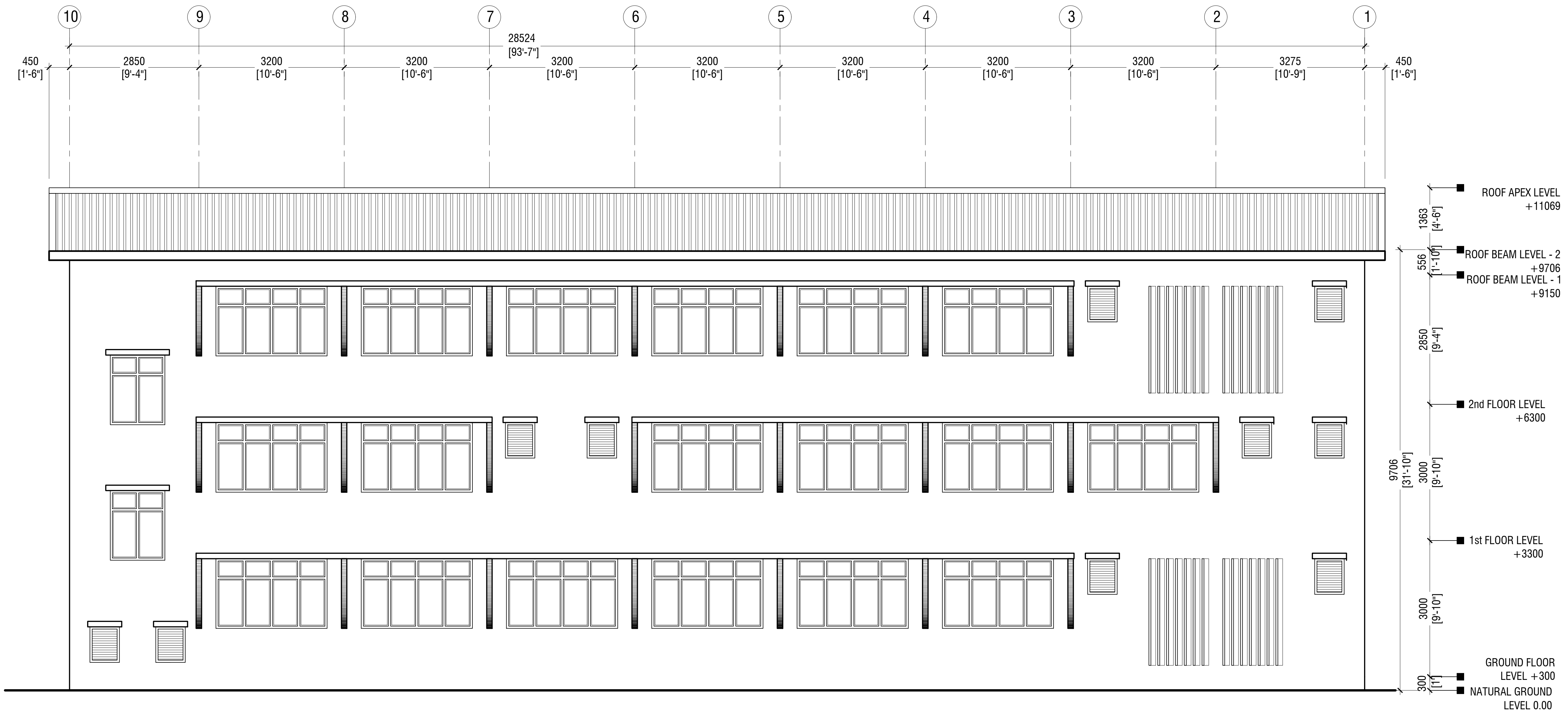
10
9
8
7
6
5
4
3
2
1
28524
[93'-7"]
450
[1'-6"]
2850
[9'-4"]
3200
[10'-6"]
3200
[10'-6"]
3200
[10'-6"]
3200
[10'-6"]
3200
[10'-6"]
3200
[10'-6"]
3200
[10'-6"]
3275
[10'-9"]
450
[1'-6"]
ROOF APEX LEVEL
+11069
1363
[4'-6"]
ROOF BEAM LEVEL - 2
+9706
556
[1'-10"]
ROOF BEAM LEVEL - 1
+9150
2850
[9'-4"]
2nd FLOOR LEVEL
+6300
9706
[31'-10"]
3000
[9'-10"]
1st FLOOR LEVEL
+3300
3000
[9'-10"]
GROUND FLOOR
LEVEL +300
300
[1']
NATURAL GROUND
LEVEL 0.00

ELEVATION E2

SCALE 1:100

0 0.5 1 2 3 4 5

M.Mulaku School (3 story)
Client: Ministry of Education

Project Number: RI/2020/006
Date: June 2021
Architect : Mariyam Irasha Shareef
Engineer : Mohamed Muththalib Waleed
Drawn by : Mariyam Leevan Jaleel
Services : Aishath Ahmed
Interior : -

Rev no	Date
--	----------
--	----------
--	----------
--	----------

RIYAN PRIVATE LIMITED

t : +9603315049 f : +9603310776
e : info@riyan.com.mv
w : www.riyan.com.mv
3rd floor, H. Azum, Ameeneemagu, Male'

Title: Elevation - E2
-

Page: A-07/26

The contents of these drawings remain as a property of Riyan Private Limited. Any use other that those expressly stated is a violation of this copyright

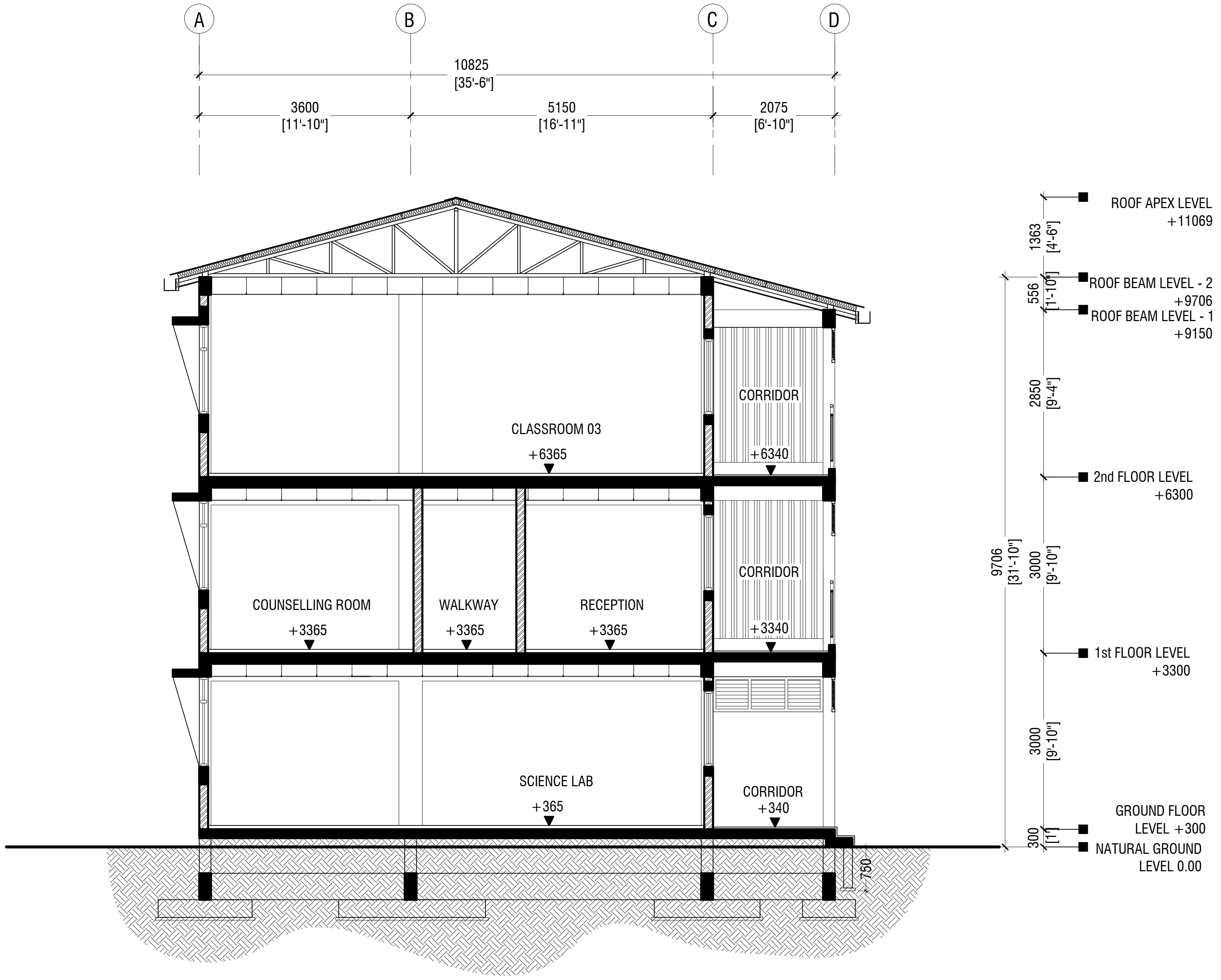
A
B
C
D
10825
[35'-6"]
3600
[11'-10"]
5150
[16'-11"]
2075
[6'-10"]
CORRIDOR
CLASSROOM 03
+6365
+6340
COUNSELLING ROOM
+3365
WALKWAY
+3365
RECEPTION
+3365
CORRIDOR
+3340
SCIENCE LAB
+365
CORRIDOR
+340
750
ROOF APEX LEVEL
+11069
ROOF BEAM LEVEL - 2
+9706
ROOF BEAM LEVEL - 1
+9150
2nd FLOOR LEVEL
+6300
1st FLOOR LEVEL
+3300
GROUND FLOOR
LEVEL +300
NATURAL GROUND
LEVEL 0.00
1363
[4'-6"]
556
[1'-10"]
2850
[9'-4"]
3000
[9'-10"]
3000
[9'-10"]
300
[1']
9706
[31'-10"]

SECTION X-X

SCALE 1:100

0 0.5 1 2 3 4 5

M.Mulaku School (3 story)
Client: Ministry of Education

Project Number: RI/2020/006
Date: June 2021
Architect : Mariyam Irasha Shareef
Engineer : Mohamed Muththalib Waleed
Drawn by : Mariyam Leevan Jaleel
Services : Aishath Ahmed
Interior : -

Rev no	Date
--	----------------
--	----------------
--	----------------
--	----------------

RIYAN PRIVATE LIMITED

t : +9603315049 **f :** +9603310776
e : info@riyan.com.mv
w : www.riyan.com.mv
3rd floor, H. Azum, Ameeneemagu, Male'

Title: Section X-X
-

The contents of these drawings remain as a property of Riyan Private Limited. Any use other that those expressly stated is a violation of this copyright

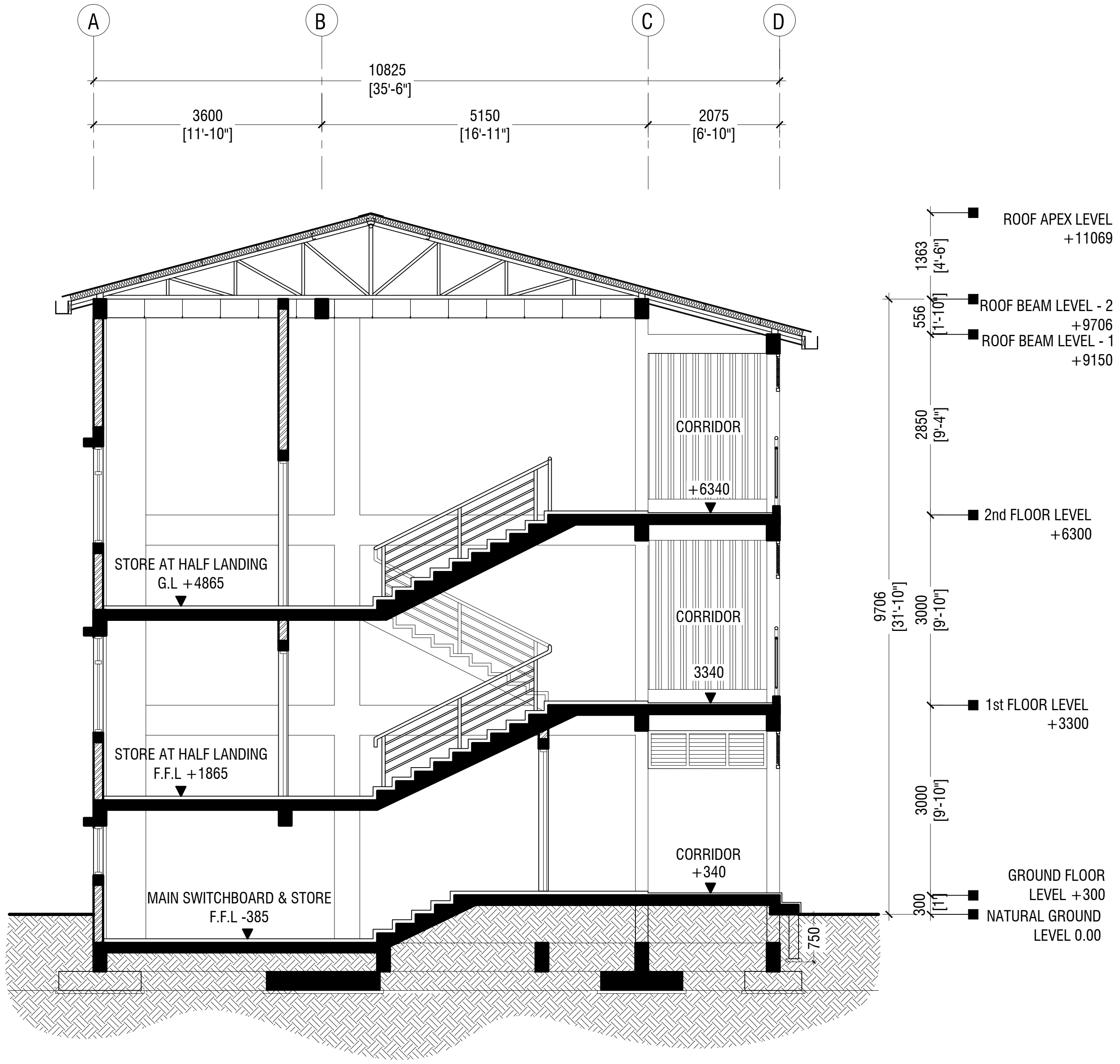
A
B
C
D
10825
[35'-6"]
3600
[11'-10"]
5150
[16'-11"]
2075
[6'-10"]
ROOF APEX LEVEL
+11069
1363
[4'-6"]
ROOF BEAM LEVEL - 2
+9706
556
[1'-10"]
ROOF BEAM LEVEL - 1
+9150
2850
[9'-4"]
CORRIDOR
+6340
2nd FLOOR LEVEL
+6300
9706
[31'-10"]
3000
[9'-10"]
STORE AT HALF LANDING
G.L +4865
CORRIDOR
3340
1st FLOOR LEVEL
+3300
STORE AT HALF LANDING
F.F.L +1865
3000
[9'-10"]
CORRIDOR
+340
GROUND FLOOR
LEVEL +300
300
[1']
NATURAL GROUND
LEVEL 0.00
MAIN SWITCHBOARD & STORE
F.F.L -385
750

SECTION Y-Y

SCALE 1:100

0 0.5 1 2 3 4 5

M.Mulaku School (3 story)
Client: Ministry of Education

Project Number: RI/2020/006
Date: June 2021
Architect : Mariyam Irasha Shareef
Engineer : Mohamed Muththalib Waleed
Drawn by : Mariyam Leevan Jaleel
Services : Aishath Ahmed
Interior : -

Rev no	Date
--	------------
--	------------
--	------------
--	------------

RIYAN PRIVATE LIMITED

t : +9603315049 **f :** +9603310776
e : info@riyan.com.mv
w : www.riyan.com.mv
3rd floor, H. Azum, Ameeneemagu, Male'

Title: Section Y-Y

Page: A-09/26

The contents of these drawings remain as a property of Riyan Private Limited. Any use other that those expressly stated is a violation of this copyright

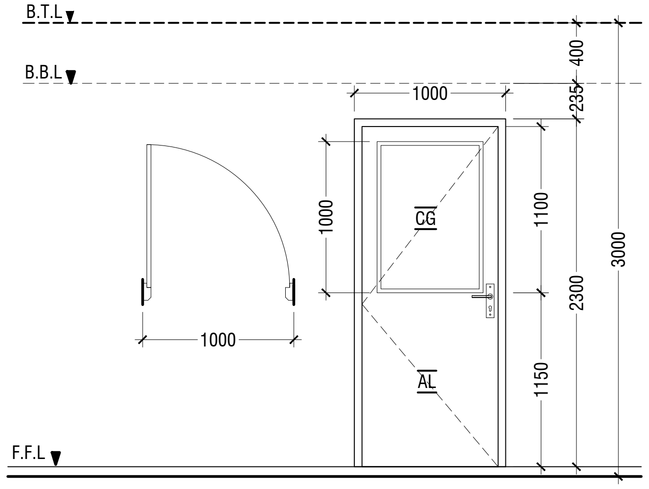
B.T.L
B.B.L
F.F.L
1000
1000
1000
CG
AL
1100
1150
400
235
2300
3000

D1	SWING DOOR
REMARKS	50mm THICK WHITE POWDER COATED (60 MICRONS) ALUMINUM FRAMED WITH ALUMINIUM PANEL AND 6mm THICK CLEAR GLASS
LOCATION	CLASSROOMS & HALF LANDING STORE ROOM
QUANTITY	18 NOS
OPEN AREA	2.03 sqm

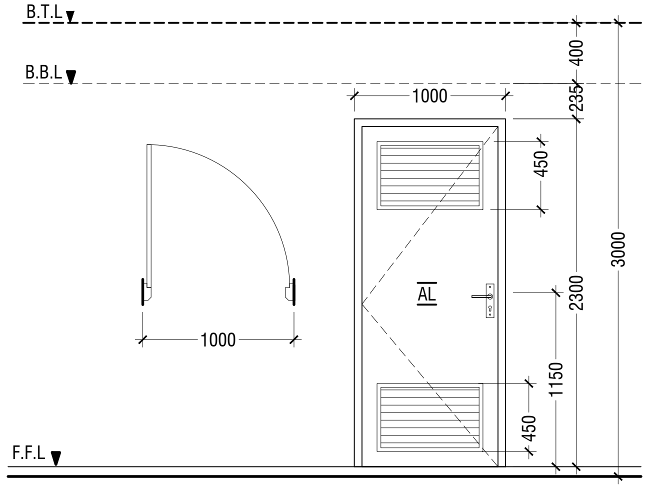
B.T.L
B.B.L
F.F.L
1000
1000
AL
450
450
1150
400
235
2300
3000

D2	SWING DOOR WITH ALUMINIUM LOUVERS
REMARKS	50mm THICK WHITE POWDER COATED (60 MICRONS) ALUMINUM FRAMED WITH ALUMINIUM PANEL AND ALUMINUM LOUVERS
LOCATION	TOILETS & MAIN SWITCH BOARD STORE
QUANTITY	05 NOS
OPEN AREA	2.03 sqm

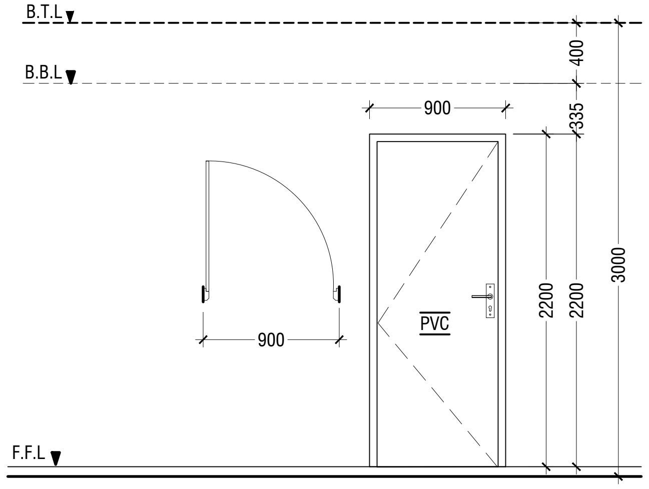
B.T.L
B.B.L
F.F.L
900
900
PVC
400
335
2200
2200
3000

D3	PVC SWING DOOR
REMARKS	PVC WHITE FRAME AND PANEL
LOCATION	STORE & CLEANER CLOSET
QUANTITY	08 NOS
OPEN AREA	1.29 SQM

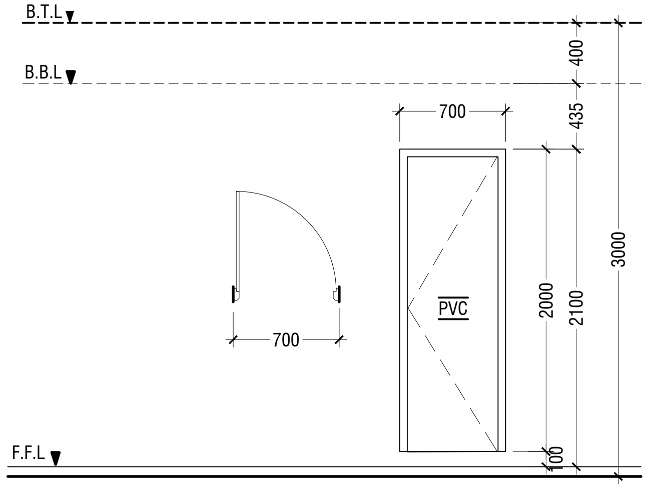
B.T.L
B.B.L
F.F.L
700
700
PVC
400
435
2000
2100
100
3000

D4	PVC SWING DOOR
REMARKS	PVC WHITE FRAME AND PANEL
LOCATION	TOILETS STALLS
QUANTITY	16 NOS
OPEN AREA	1.17 SQM

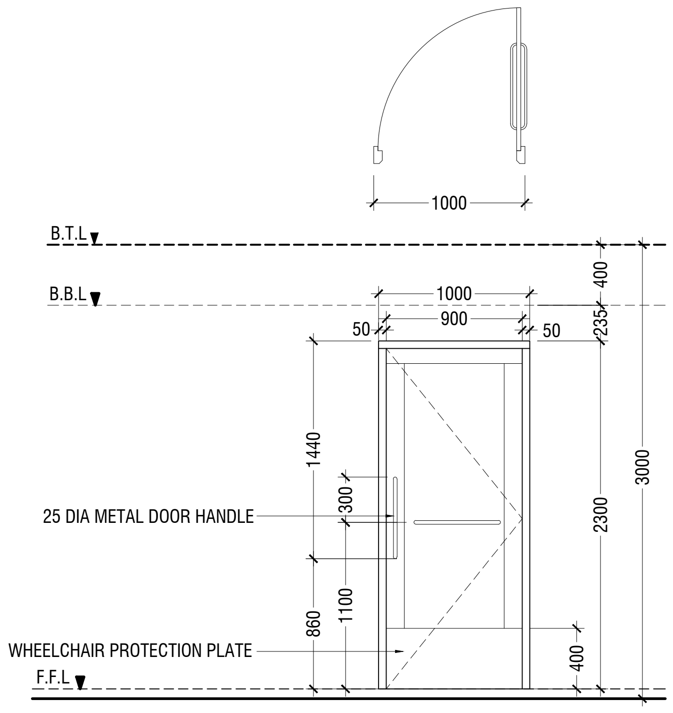
1000
B.T.L
B.B.L
F.F.L
1000
900
50
50
1440
300
25 DIA METAL DOOR HANDLE
860
1100
WHEELCHAIR PROTECTION PLATE
400
400
235
2300
3000

D5	SWING DOOR
REMARKS	50mm THICK WHITE POWDER COATED (60 MICRONS) ALUMINUM FRAMED WITH ALUMINIUM PANEL
LOCATION	DISABLED TOILET
QUANTITY	01 NOS
OPEN AREA	2.03 sqm

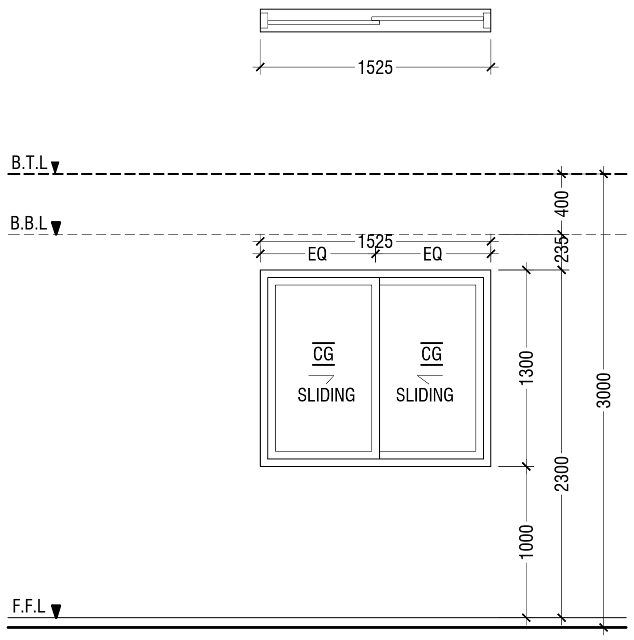
1525
B.T.L
B.B.L
F.F.L
1525
EQ
EQ
CG
SLIDING
CG
SLIDING
1300
1000
400
235
2300
3000

W1	SLIDING WINDOW
REMARKS	50mm THICK WHITE POWDER COATED (60 MICRONS) ALUMINUM FRAMED WITH ALUMINIUM PANEL AND 6mm THICK CLEAR GLASS
LOCATION	CLASSROOMS
QUANTITY	20 NOS
OPEN AREA	0.83 sqm

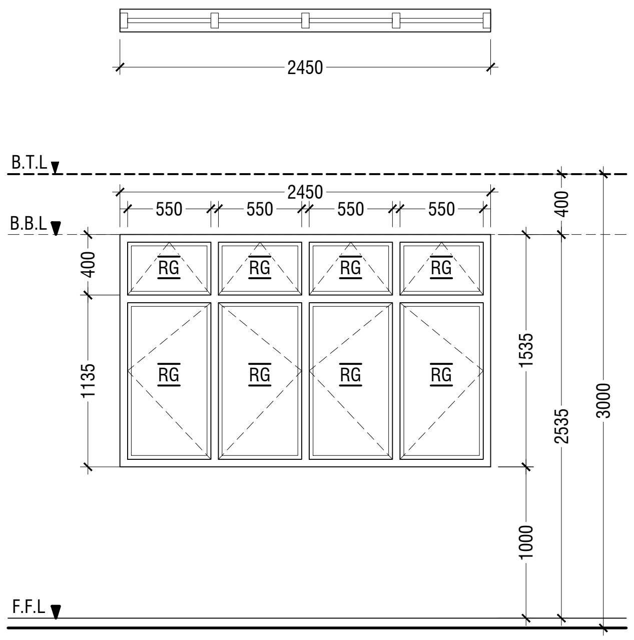
2450
B.T.L
B.B.L
F.F.L
2450
550
550
550
550
RG
400
1135
1535
1000
400
2535
3000

W2	SWING WINDOW
REMARKS	50mm THICK WHITE POWDER COATED (60 MICRONS) ALUMINUM FRAMED WINDOW WITH 6mm THICK REFLECTIVE GLASS
LOCATION	CLASSROOMS
QUANTITY	18 NOS
OPEN AREA	3.04 sqm

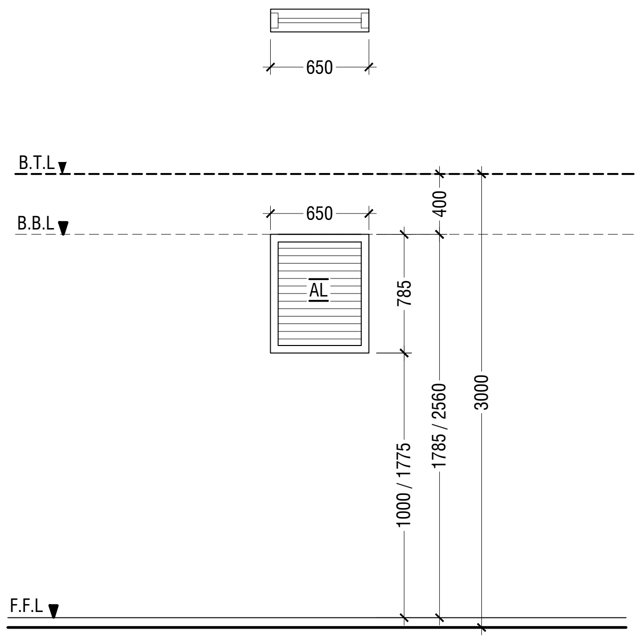
650
B.T.L
B.B.L
F.F.L
650
AL
785
400
1000 / 1775
1785 / 2560
3000

W3	WINDOW WITH ALUMINIUM LOUVERS
REMARKS	50mm THICK WHITE POWDER COATED (60 MICRONS) ALUMINIUM FRAMED WITH ALUMINUM LOUVERS
LOCATION	TOILETS & MAIN SWITCH BOARD STORE
QUANTITY	13 NOS
OPEN AREA	0.38 SQM

NOTE:-
1. FLOOR TO FLOOR HEIGHT VARIES AND WILL BE SUBJECTED TO CHANGES
2. MAINTAIN FLOOR TO WINDOW SILL STANDARD HEIGHT REGULATION OF 1M.
3, REFER TO ARCHITECT FOR FURTHER ASSISTANCE.
4. ALL DOORS & WINDOWS TO BE CHECKED ON SITE BEFORE FABRICATION.
5. ALL DOOR & WINDOWS VIEWED FROM EXTERIOR, FOR DOOR SWING, REFER TO FLOOR PLANS.
6. THE DOORS / WINDOWS WHICH DO NOT TOUCH THE BEAM SHALL HAVE A LINTEL BEAM (LB) ABOVE THE DOOR / WINDOW.
7. FOR ALL THE WINDOWS PUT A SILL BEAM BELOW THE WINDOW (SB)
8. FOR SAFETY PURPOSES REFER TO TECHNICAL SPECIFICATIONS FOR GLASS THICKNESS.

LEGEND:
CG - CLEAR GLASS
RG - REFLECTED GLASS
AL - ALUMINIUM
PVC - POLYVINYL CHLORIDE

DOOR & WINDOW SCHEDULE - 1

SCALE 1:50

M.Mulaku School (3 story)
Client: Ministry of Education

Project Number: RI/2020/006
Date: June 2021
Architect : Mariyam Irasha Shareef
Engineer : Mohamed Muththalib Waleed
Drawn by : Mariyam Leevan Jaleel
Services : Aishath Ahmed
Interior : -

Rev no	Date
--	----------
--	----------
--	----------
--	----------

RIYAN PRIVATE LIMITED
t : +9603315049 f : +9603310776
e : info@riyan.com.mv
w : www.riyan.com.mv
3rd floor, H. Azum, Ameeneemagu, Male'

Title: Door / Window Schedule - 1

The contents of these drawings remain as a property of Riyan Private Limited. Any use other that those expressly stated is a violation of this copyright

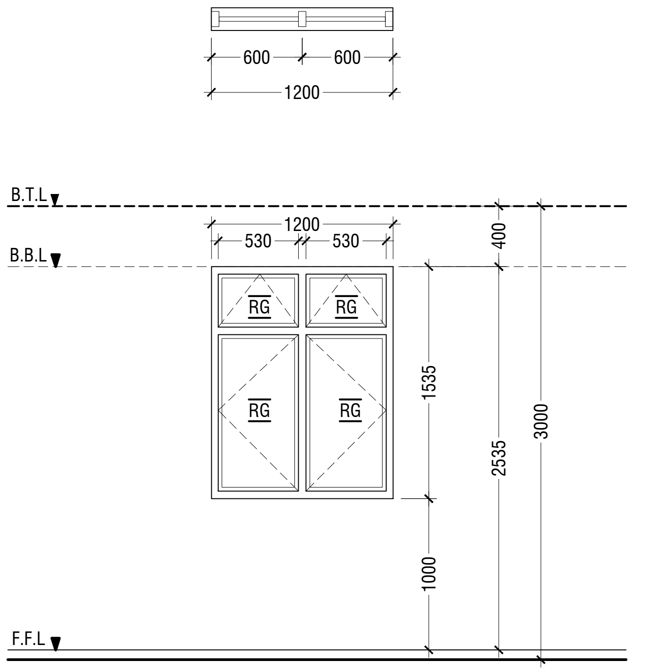

W4	SWING WINDOW
REMARKS	50mm THICK WHITE POWDER COATED (60 MICRONS) ALUMINUM FRAMED WINDOW WITH 6mm THICK REFLECTIVE GLASS
LOCATION	HALF LANDING STORE ROOM
QUANTITY	02 NOS
OPEN AREA	1.43 sqm

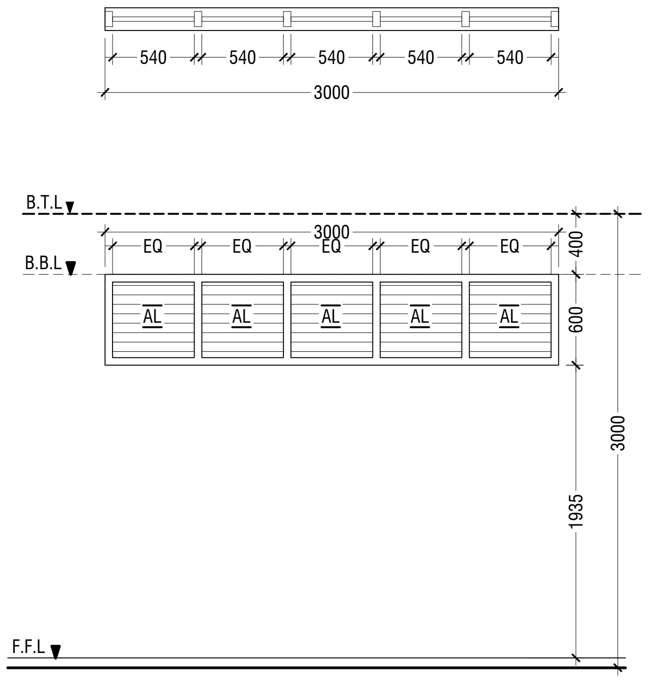

V1	SUNSHADING
REMARKS	50mm THICK WHITE POWDER COATED (60 MICRONS) ALUMINUM FRAMED WITH ALUMINUM LOUVERS
LOCATION	CORRIDOR
QUANTITY	21 NOS
OPEN AREA	1.35 SQM

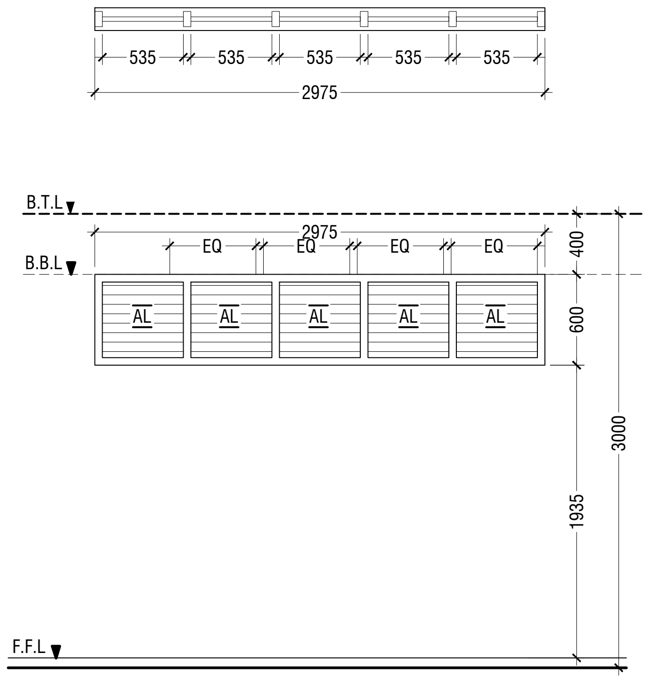

V2	SUNSHADING
REMARKS	50mm THICK WHITE POWDER COATED (60 MICRONS) ALUMINUM FRAMED WITH ALUMINUM LOUVERS
LOCATION	CORRIDOR
QUANTITY	03 NOS
OPEN AREA	1.35 SQM

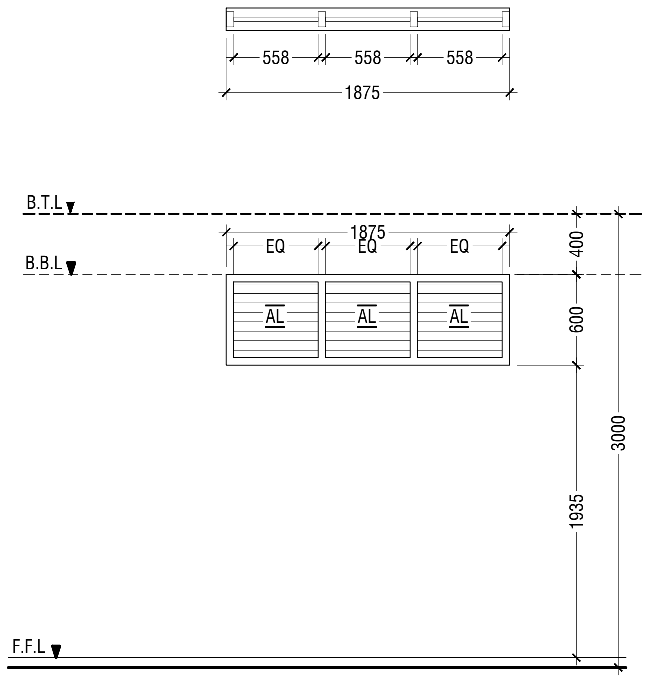

V3	SUNSHADING
REMARKS	50mm THICK WHITE POWDER COATED (60 MICRONS) ALUMINUM FRAMED WITH ALUMINUM LOUVERS
LOCATION	CORRIDOR
QUANTITY	02 NOS
OPEN AREA	0.84 SQM

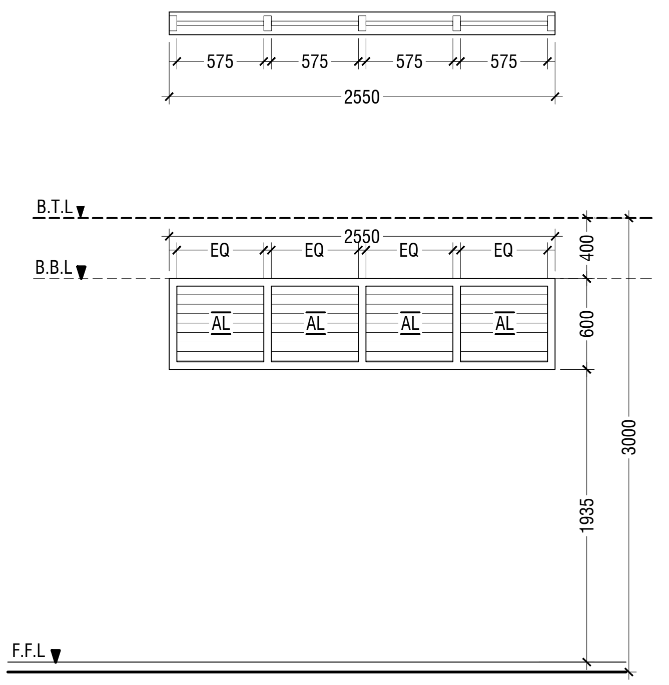

V4	SUNSHADING
REMARKS	50mm THICK WHITE POWDER COATED (60 MICRONS) ALUMINUM FRAMED WITH ALUMINUM LOUVERS
LOCATION	CORRIDOR
QUANTITY	03 NOS
OPEN AREA	1.15 SQM

LEGEND:
CG - CLEAR GLASS
RG - REFLECTED GLASS
AL - ALUMINIUM
PVC - POLYVINYL CHLORIDE

NOTE:-
1. FLOOR TO FLOOR HEIGHT VARIES AND WILL BE SUBJECTED TO CHANGES
2. MAINTAIN FLOOR TO WINDOW SILL STANDARD HEIGHT REGULATION OF 1M.
3, REFER TO ARCHITECT FOR FURTHER ASSISTANCE.
4. ALL DOORS & WINDOWS TO BE CHECKED ON SITE BEFORE FABRICATION.
5. ALL DOOR & WINDOWS VIEWED FROM EXTERIOR, FOR DOOR SWING, REFER TO FLOOR PLANS.
6. THE DOORS / WINDOWS WHICH DO NOT TOUCH THE BEAM SHALL HAVE A LINTEL BEAM (LB) ABOVE THE DOOR / WINDOW.
7. FOR ALL THE WINDOWS PUT A SILL BEAM BELOW THE WINDOW (SB)
8. FOR SAFETY PURPOSES REFER TO TECHNICAL SPECIFICATIONS FOR GLASS THICKNESS.

DOOR & WINDOW SCHEDULE - 2

SCALE 1:50

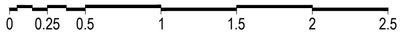

SCHEDULE OF VENTILATION FOR M.MULAKU SCHOOL

Room name/ Number	Room Areas (sqm) (Specify centre to centre or clear)	Window (opening) number	Required opening areas (sqm)	Designed opening areas (sqm)	Open %
Ground Floor					
1 Science Lab	52.81	2W1, 2W2 & 2D1	5.28	11.66	22.08%
2 AV Room	52.81	2W1, 2W2 & 2D1	5.28	11.66	22.08%
3 Classroom 1	52.81	2W1, 2W2 & 2D1	5.28	11.66	22.08%
4 Toilet (F)	12.73		W3 & RC FINS		
5 Toilet (M)	9.09		W3 & RC FINS		
6 Toilet for disabled	5.12		Mechanical Ventilation		
7 Main switchboard /store	11.25		*Mechanical Ventilation*		
First Floor					
1 Principle Room	11.90	2W1, 2W2 & 2D1	1.19	11.66	97.98%
2 Principle Toilet	4.27		Mechanical Ventilation		
3 Toilet (F)		Mechanical Ventilation			
4 Toilet (M)		Mechanical Ventilation			
5 Store	5.02	D1 & W3	0.50	2.41	48.01%
6 Admin Counter	26.09	3W2	2.61	9.12	34.96%
7 Administrator Room	9.30	W1	0.93	0.83	10.01%
8 Deputy Principle Room	9.30	W1	0.93	0.83	10.01%
9 Reception & Waiting Area	18.96	2W1 & D1	1.90	3.69	19.46%
10 Staff Room	52.81	2W1, 2W2 & 1D1	5.28	9.63	18.24%
11 Staff Toilet (F)	2.12		Mechanical Ventilation		
12 Staff Toilet (M)	2.12		Mechanical Ventilation		
13 Counsellor Room	9.30	W2	0.93	3.04	32.69%
14 Store at half landing level	7.22	W4	0.72	1.43	19.81%
Second Floor					
1 Classroom 2	52.81	2W1, 2W2 & 2D1	5.28	11.66	22.08%
2 Classroom 3	52.81	2W1, 2W2 & 2D1	5.28	11.66	22.08%
3 Classroom 4	52.81	2W1, 2W2 & 2D1	5.28	11.66	22.08%
4 Store at half landing level	7.22	W4	0.72	1.43	19.81%
5 Toilet (F)	16.24		Mechanical Ventilation		
6 Toilet (M)	16.24		Mechanical Ventilation		

VENTILATION SCHEDULE

M.Mulaku School (3 story)
Client: Ministry of Education

Project Number: RI/2020/006
Date: June 2021
Architect : Mariyam Irasha Shareef
Engineer : Mohamed Muththalib Waleed
Drawn by : Mariyam Leevan Jaleel
Services : Aishath Ahmed
Interior : -

Rev no	Date
--	------------
--	------------
--	------------
--	------------

RIYAN PRIVATE LIMITED

t : +9603315049 f : +9603310776
e : info@riyan.com.mv
w : www.riyan.com.mv
3rd floor, H. Azum, Ameeneemagu, Male'

Title: Door/Window Schedule 2 & Ventilation Schedule

Page: A-11/26

The contents of these drawings remain as a property of Riyan Private Limited. Any use other that those expressly stated is a violation of this copyright

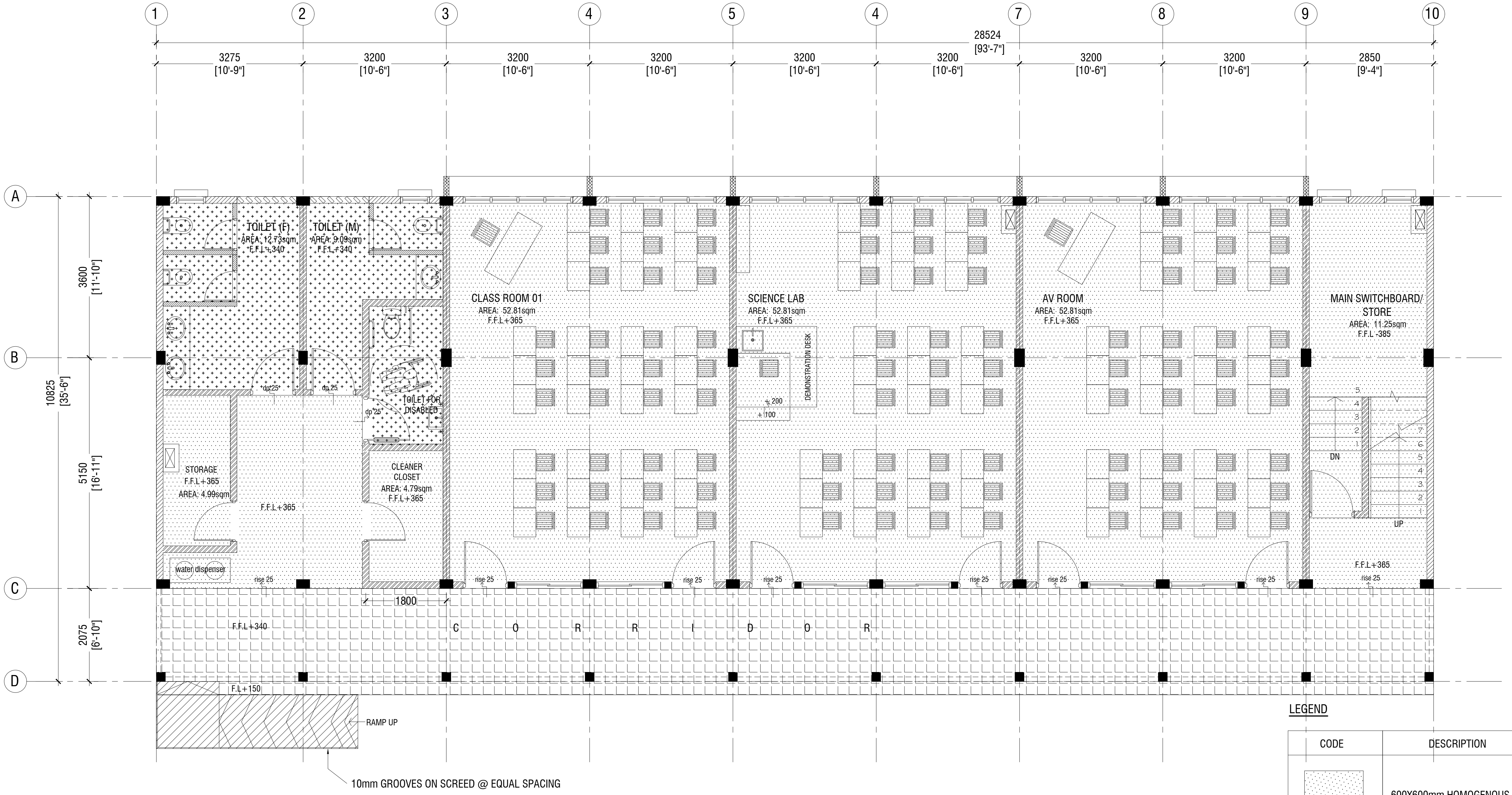
1
2
3
4
5
4
7
8
9
10
28524
[93'-7"]
3275
[10'-9"]
3200
[10'-6"]
2850
[9'-4"]
A
B
C
D
3600
[11'-10"]
5150
[16'-11"]
2075
[6'-10"]
10825
[35'-6"]
TOILET (F)
AREA: 12.73sqm
F.F.L+340
TOILET (M)
AREA: 9.09sqm
F.F.L+340
dp 25
TOILET FOR DISABLED
STORAGE
F.F.L+365
AREA: 4.99sqm
CLEANER CLOSET
AREA: 4.79sqm
F.F.L+365
water dispenser
rise 25
CLASS ROOM 01
AREA: 52.81sqm
F.F.L+365
SCIENCE LAB
AREA: 52.81sqm
F.F.L+365
DEMONSTRATION DESK
+200
+100
AV ROOM
AREA: 52.81sqm
F.F.L+365
MAIN SWITCHBOARD/ STORE
AREA: 11.25sqm
F.F.L -385
DN
UP
1
2
3
4
5
6
7
1800
F.F.L+340
C O R R I D O R
F.F.L+150
RAMP UP
10mm GROOVES ON SCREED @ EQUAL SPACING

LEGEND

CODE	DESCRIPTION
░	600X600mm HOMOGENOUS NON-SLIP TILES OVER 50mm SCREEDING
▨	2.5mm SELF LEVELING CEMENT WITH EPOXY FLOORPAINT (2 COATS OF EPOXY)
⁜	300X300mm HOMOGENOUS NON-SLIP TILES OVER 25mm SCREEDING
▦	600X600mm HOMOGENOUS NON-SLIP TILES OVER 25mm SCREEDING (CEMENTITIOUS WATERPROOFING: MASTERSEAL 588 OR EQUIVALENT ON TOP OF THE SLAB)

GROUND FLOOR FLOOR FINISHES PLAN

SCALE 1:100

0 0.5 1 2 3 4 5

M.Mulaku School (3 story)
Client: Ministry of Education

Project Number: RI/2020/006
Date: June 2021
Architect : Mariyam Irasha Shareef
Engineer : Mohamed Muththalib Waleed
Drawn by : Mariyam Leevan Jaleel
Services : Aishath Ahmed
Interior : -

Rev no	Date
--	----------
--	----------
--	----------
--	----------

RIYAN PRIVATE LIMITED
t : +9603315049 f : +9603310776
e : info@riyan.com.mv
w : www.riyan.com.mv
3rd floor, H. Azum, Ameeneemagu, Male'

Title: Ground Floor
Floor Finish Plan

Page: A-12/26

The contents of these drawings remain as a property of Riyan Private Limited. Any use other that those expressly stated is a violation of this copyright

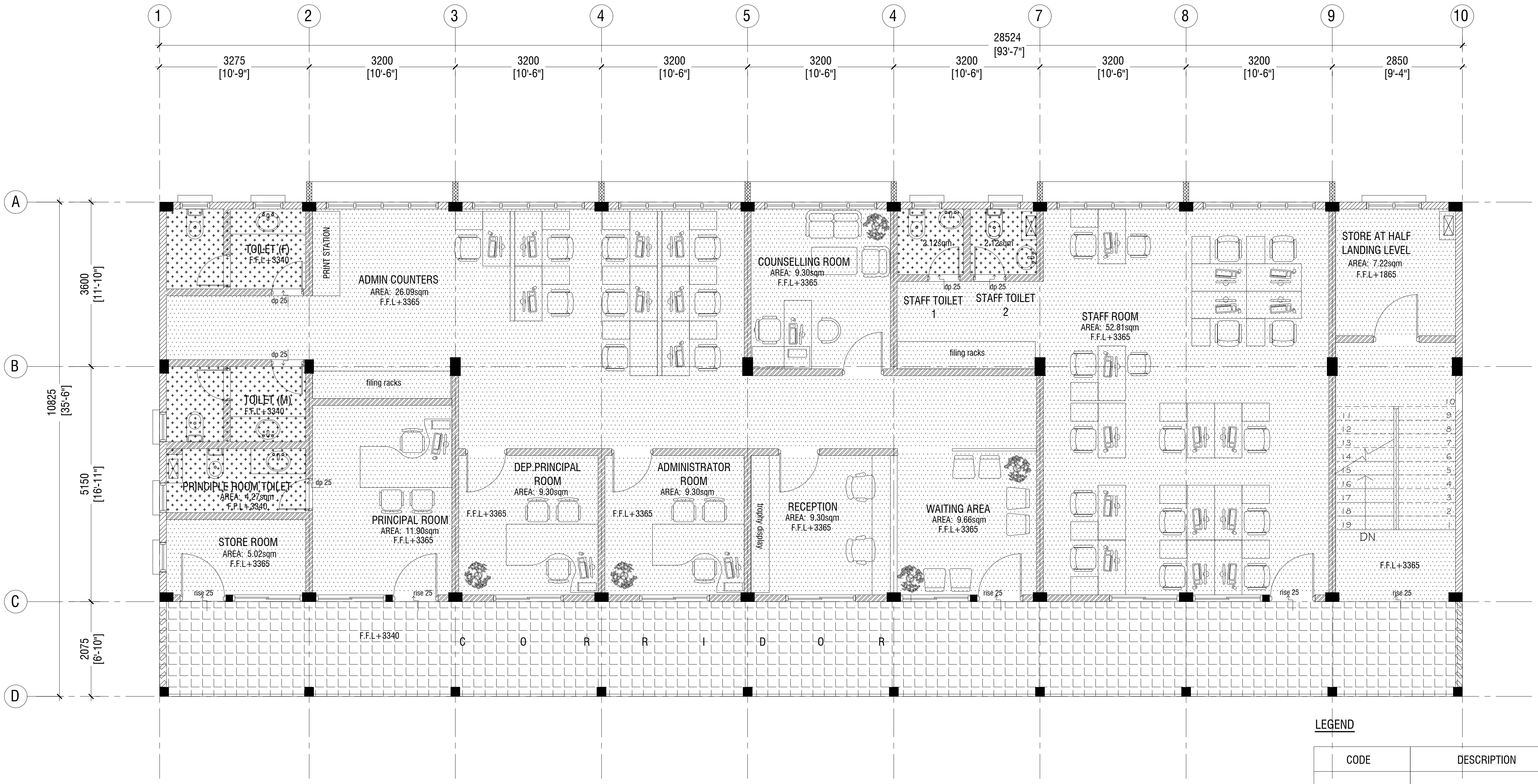
1
2
3
4
5
4
7
8
9
10
28524
[93'-7"]
3275
[10'-9"]
3200
[10'-6"]
2850
[9'-4"]
A
B
C
D
3600
[11'-10"]
10825
[35'-6"]
5150
[16'-11"]
2075
[6'-10"]
TOILET (F)
F.F.L+3340
dp 25
PRINT STATION
ADMIN COUNTERS
AREA: 26.09sqm
F.F.L+3365
COUNSELLING ROOM
AREA: 9.30sqm
F.F.L+3365
2.12sqm
2.12sqm
dp 25
dp 25
STAFF TOILET 1
STAFF TOILET 2
filing racks
STAFF ROOM
AREA: 52.81sqm
F.F.L+3365
STORE AT HALF LANDING LEVEL
AREA: 7.22sqm
F.F.L+1865
dp 25
TOILET (M)
F.F.L+3340
filing racks
PRINCIPLE ROOM TOILET
AREA: 4.27sqm
F.F.L+3340
dp 25
PRINCIPAL ROOM
AREA: 11.90sqm
F.F.L+3365
DEP.PRINCIPAL ROOM
AREA: 9.30sqm
F.F.L+3365
ADMINISTRATOR ROOM
AREA: 9.30sqm
F.F.L+3365
trophy display
RECEPTION
AREA: 9.30sqm
F.F.L+3365
WAITING AREA
AREA: 9.66sqm
F.F.L+3365
STORE ROOM
AREA: 5.02sqm
F.F.L+3365
1
2
3
4
5
6
7
8
9
10
11
12
13
14
15
16
17
18
19
DN
F.F.L+3365
rise 25
rise 25
rise 25
rise 25
rise 25
F.F.L+3340
C O R R I D O R

FIRST FLOOR
FLOOR FINISHES PLAN

SCALE 1:100

0 0.5 1 2 3 4 5

LEGEND

CODE	DESCRIPTION
░	600X600mm HOMOGENOUS NON-SLIP TILES OVER 50mm SCREEDING
▨	2.5mm SELF LEVELING CEMENT WITH EPOXY FLOORPAINT (2 COATS OF EPOXY)
⁘	300X300mm HOMOGENOUS NON-SLIP TILES OVER 25mm SCREEDING
▦	600X600mm HOMOGENOUS NON-SLIP TILES OVER 25mm SCREEDING (CEMENTITIOUS WATERPROOFING: MASTERSEAL 588 OR EQUIVALENT ON TOP OF THE SLAB)

M.Mulaku School (3 story)
Client: Ministry of Education

Project Number: RI/2020/006
Date: June 2021
Architect : Mariyam Irasha Shareef
Engineer : Mohamed Muththalib Waleed
Drawn by : Mariyam Leevan Jaleel
Services : Aishath Ahmed
Interior : -

Rev no	Date
--	----------
--	----------
--	----------
--	----------

RIYAN PRIVATE LIMITED
t : +9603315049 f : +9603310776
e : info@riyan.com.mv
w : www.riyan.com.mv
3rd floor, H. Azum, Ameeneemagu, Male'

Title: First Floor
Floor Finish Plan

The contents of these drawings remain as a property of Riyan Private Limited. Any use other that those expressly stated is a violation of this copyright

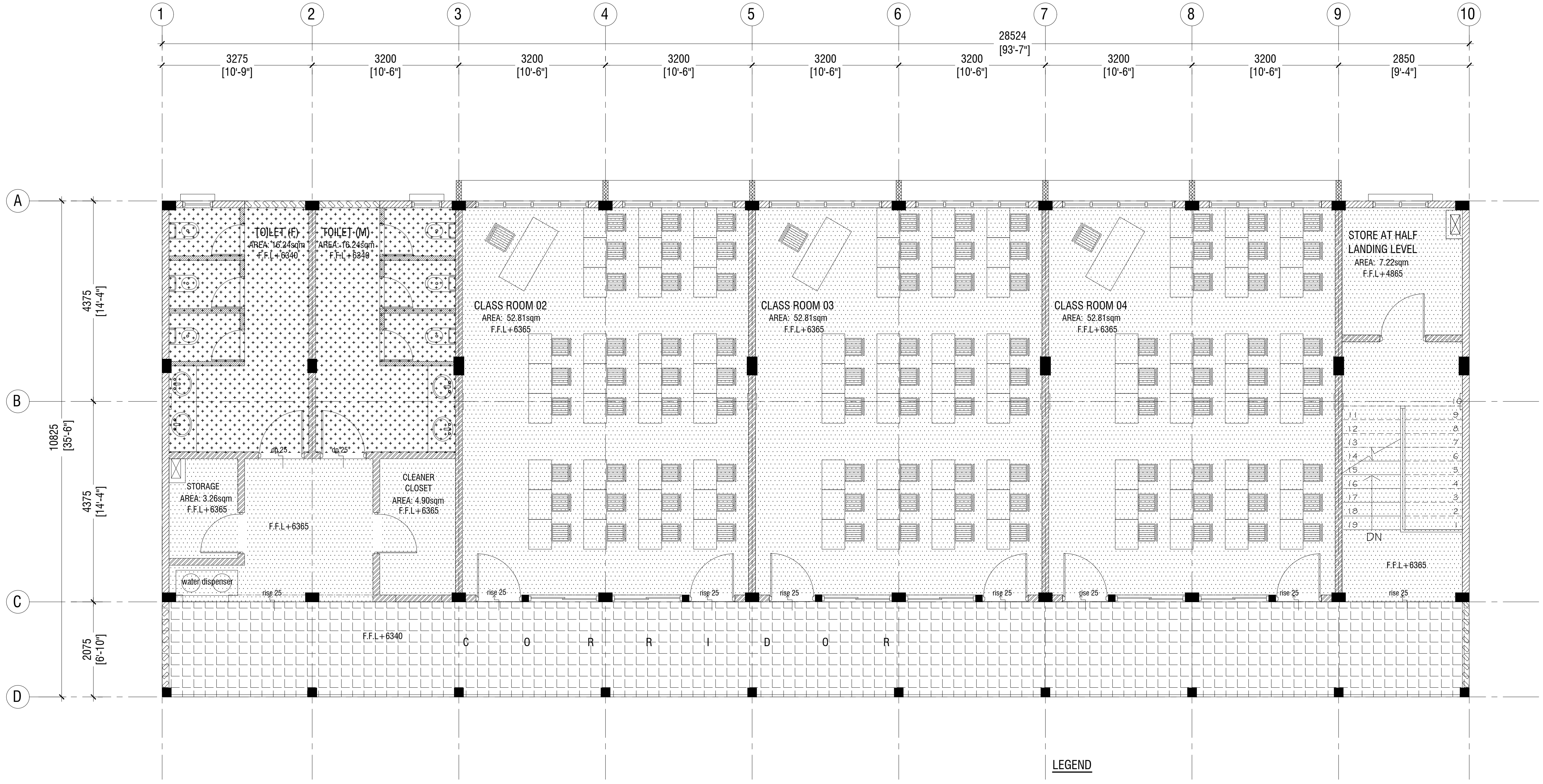
1
2
3
4
5
6
7
8
9
10
28524
[93'-7"]
3275
[10'-9"]
3200
[10'-6"]
2850
[9'-4"]
A
B
C
D
4375
[14'-4"]
10825
[35'-6"]
2075
[6'-10"]
TOILET (F)
AREA: 16.24sqm
F.F.L+6340
TOILET (M)
AREA: 16.24sqm
F.F.L+6340
dp 25
STORAGE
AREA: 3.26sqm
F.F.L+6365
CLEANER
CLOSET
AREA: 4.90sqm
F.F.L+6365
F.F.L+6365
water dispenser
rise 25
CLASS ROOM 02
AREA: 52.81sqm
F.F.L+6365
CLASS ROOM 03
AREA: 52.81sqm
F.F.L+6365
CLASS ROOM 04
AREA: 52.81sqm
F.F.L+6365
STORE AT HALF
LANDING LEVEL
AREA: 7.22sqm
F.F.L+4865
DN
F.F.L+6365
F.F.L+6340
C O R R I D O R

LEGEND

CODE	DESCRIPTION
░	600X600mm HOMOGENOUS NON-SLIP TILES OVER 50mm SCREEDING
▨	2.5mm SELF LEVELING CEMENT WITH EPOXY FLOORPAINT (2 COATS OF EPOXY)
⁘	300X300mm HOMOGENOUS NON-SLIP TILES OVER 25mm SCREEDING
▦	600X600mm HOMOGENOUS NON-SLIP TILES OVER 25mm SCREEDING (CEMENTITIOUS WATERPROOFING: MASTERSEAL 588 OR EQUIVALENT ON TOP OF THE SLAB)

SECOND FLOOR
FLOOR FINISHES PLAN

SCALE 1:100

0 0.5 1 2 3 4 5

M.Mulaku School (3 story)
Client: Ministry of Education

Project Number: RI/2020/006
Date: June 2021
Architect : Mariyam Irasha Shareef
Engineer : Mohamed Muththalib Waleed
Drawn by : Mariyam Leevan Jaleel
Services : Aishath Ahmed
Interior : -

Rev no	Date
--	----------
--	----------
--	----------
--	----------

RIYAN PRIVATE LIMITED

t : +9603315049 f : +9603310776
e : info@riyan.com.mv
w : www.riyan.com.mv
3rd floor, H. Azum, Ameeneemagu, Male'

Title: Second Floor
Floor Finish Plan

The contents of these drawings remain as a property of Riyan Private Limited. Any use other that those expressly stated is a violation of this copyright

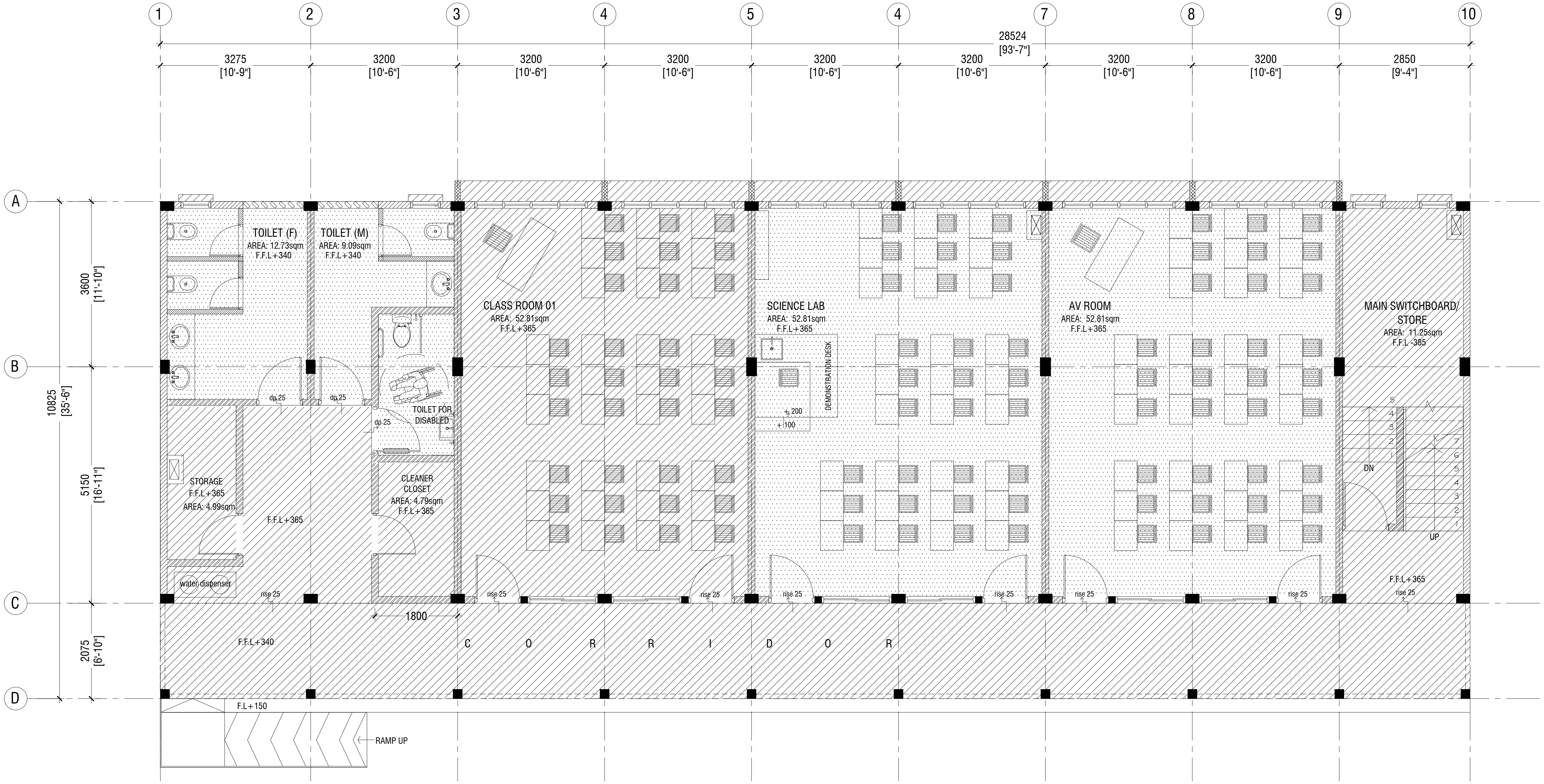
1
2
3
4
5
4
7
8
9
10
28524
[93'-7"]
3275
[10'-9"]
3200
[10'-6"]
2850
[9'-4"]
A
B
C
D
3600
[11'-10"]
5150
[16'-11"]
2075
[6'-10"]
10825
[35'-6"]
TOILET (F)
AREA: 12.73sqm
F.F.L+340
TOILET (M)
AREA: 9.09sqm
F.F.L+340
dp 25
TOILET FOR
DISABLED
STORAGE
F.F.L+365
AREA: 4.99sqm
F.F.L+365
CLEANER
CLOSET
AREA: 4.79sqm
F.F.L+365
water dispenser
rise 25
1800
CLASS ROOM 01
AREA: 52.81sqm
F.F.L+365
SCIENCE LAB
AREA: 52.81sqm
F.F.L+365
DEMONSTRATION DESK
+ 200
+ 100
AV ROOM
AREA: 52.81sqm
F.F.L+365
MAIN SWITCHBOARD/
STORE
AREA: 11.25sqm
F.F.L -385
DN
UP
F.F.L+365
F.F.L+340
C O R R I D O R
F.L+150
RAMP UP

LEGEND

CODE	DESCRIPTION
▨	EXPOSED SLAB SOFFIT TO BE GROUND SMOOTH IN SELECT PAINT FINISH (ONE COAT OF PUTTY FOLLOWED BY SEALER AND 2 COATS OF PAINT)
░	6mm THICK CEMENT BOARD ON ROOF EAVE/GABLE CEILING (ONE COAT OF PUTTY FOLLOWED BY SEALER AND 2 COATS OF PAINT)

GROUND FLOOR REFLECTED CEILING PLAN

SCALE 1:100

0 0.5 1 2 3 4 5

M.Mulaku School (3 story)
Client: Ministry of Education

Project Number: RI/2020/006
Date: June 2021
Architect : Mariyam Irasha Shareef
Engineer : Mohamed Muththalib Waleed
Drawn by : Mariyam Leevan Jaleel
Services : Aishath Ahmed
Interior : -

Rev no	Date
--	----------------
--	----------------
--	----------------
--	----------------

RIYAN PRIVATE LIMITED

t : +9603315049 f : +9603310776
e : info@riyan.com.mv
w : www.riyan.com.mv
3rd floor, H. Azum, Ameeneemagu, Male'

Title: Ground Floor Reflected Ceiling Plan

The contents of these drawings remain as a property of Riyan Private Limited. Any use other that those expressly stated is a violation of this copyright

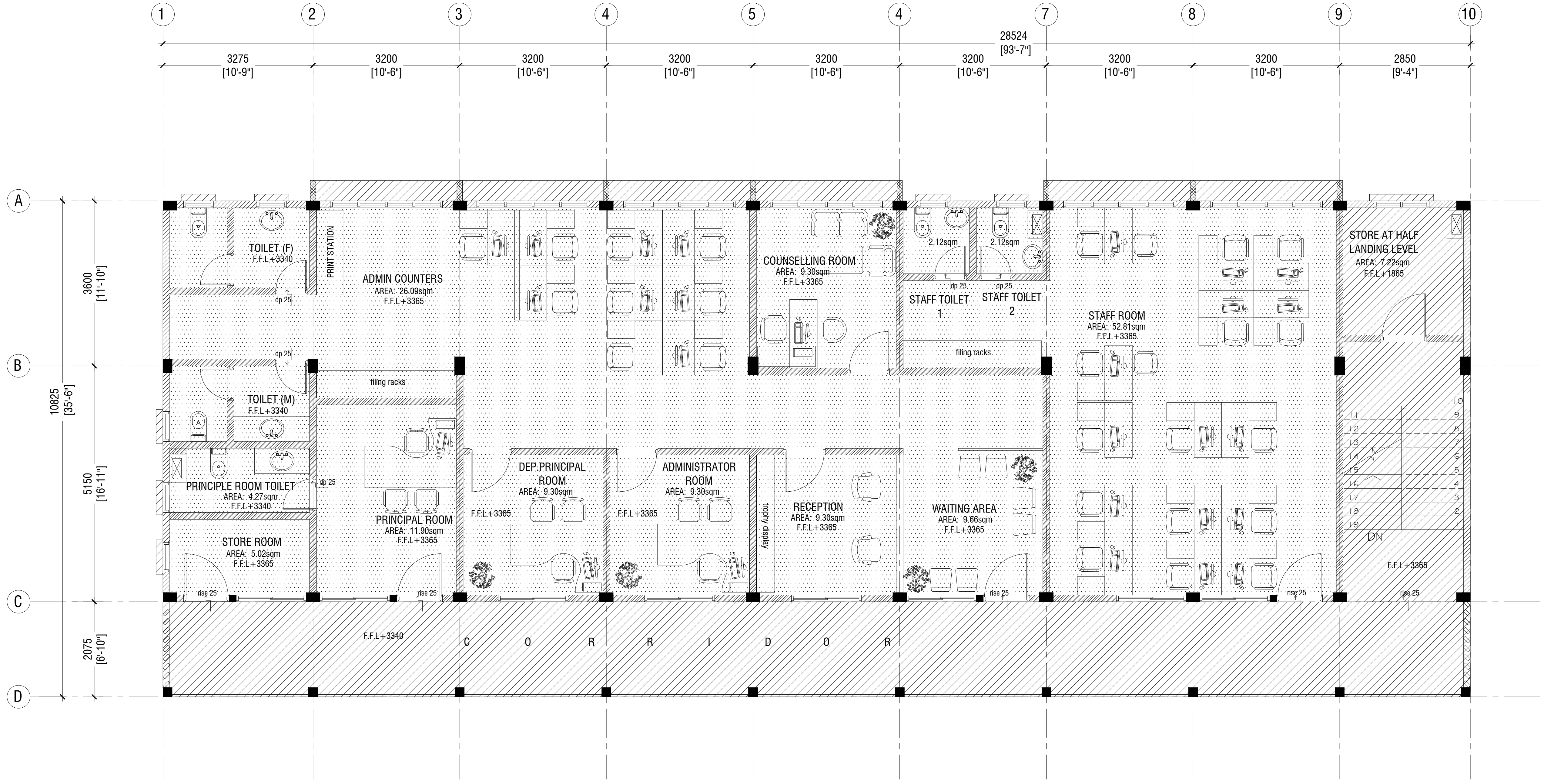
1
2
3
4
5
4
7
8
9
10
28524
[93'-7"]
3275
[10'-9"]
3200
[10'-6"]
2850
[9'-4"]
A
B
C
D
3600
[11'-10"]
5150
[16'-11"]
2075
[6'-10"]
10825
[35'-6"]
TOILET (F)
F.F.L+3340
PRINT STATION
ADMIN COUNTERS
AREA: 26.09sqm
F.F.L+3365
COUNSELLING ROOM
AREA: 9.30sqm
F.F.L+3365
2.12sqm
2.12sqm
STAFF TOILET 1
STAFF TOILET 2
dp 25
filing racks
STAFF ROOM
AREA: 52.81sqm
F.F.L+3365
STORE AT HALF LANDING LEVEL
AREA: 7.22sqm
F.F.L+1865
TOILET (M)
F.F.L+3340
PRINCIPLE ROOM TOILET
AREA: 4.27sqm
F.F.L+3340
STORE ROOM
AREA: 5.02sqm
F.F.L+3365
PRINCIPAL ROOM
AREA: 11.90sqm
F.F.L+3365
DEP.PRINCIPAL ROOM
AREA: 9.30sqm
F.F.L+3365
ADMINISTRATOR ROOM
AREA: 9.30sqm
F.F.L+3365
trophy display
RECEPTION
AREA: 9.30sqm
F.F.L+3365
WAITING AREA
AREA: 9.66sqm
F.F.L+3365
DN
F.F.L+3365
rise 25
F.F.L+3340
C O R R I D O R

FIRST FLOOR
REFLECTED CEILING PLAN

SCALE 1:100

0 0.5 1 2 3 4 5

LEGEND

CODE	DESCRIPTION
▨	EXPOSED SLAB SOFFIT TO BE GROUND SMOOTH IN SELECT PAINT FINISH (ONE COAT OF PUTTY FOLLOWED BY SEALER AND 2 COATS OF PAINT)
░	6mm THICK CEMENT BOARD ON ROOF EAVE/GABLE CEILING (ONE COAT OF PUTTY FOLLOWED BY SEALER AND 2 COATS OF PAINT)

M.Mulaku School (3 story)
Client: Ministry of Education

Project Number: RI/2020/006
Date: June 2021
Architect : Mariyam Irasha Shareef
Engineer : Mohamed Muththalib Waleed
Drawn by : Mariyam Leevan Jaleel
Services : Aishath Ahmed
Interior : -

Rev no	Date
--	-------------
--	-------------
--	-------------
--	-------------

RIYAN PRIVATE LIMITED
t : +9603315049 f : +9603310776
e : info@riyan.com.mv
w : www.riyan.com.mv
3rd floor, H. Azum, Ameeneemagu, Male'

Title: First Floor Reflected Ceiling Plan

The contents of these drawings remain as a property of Riyan Private Limited. Any use other that those expressly stated is a violation of this copyright

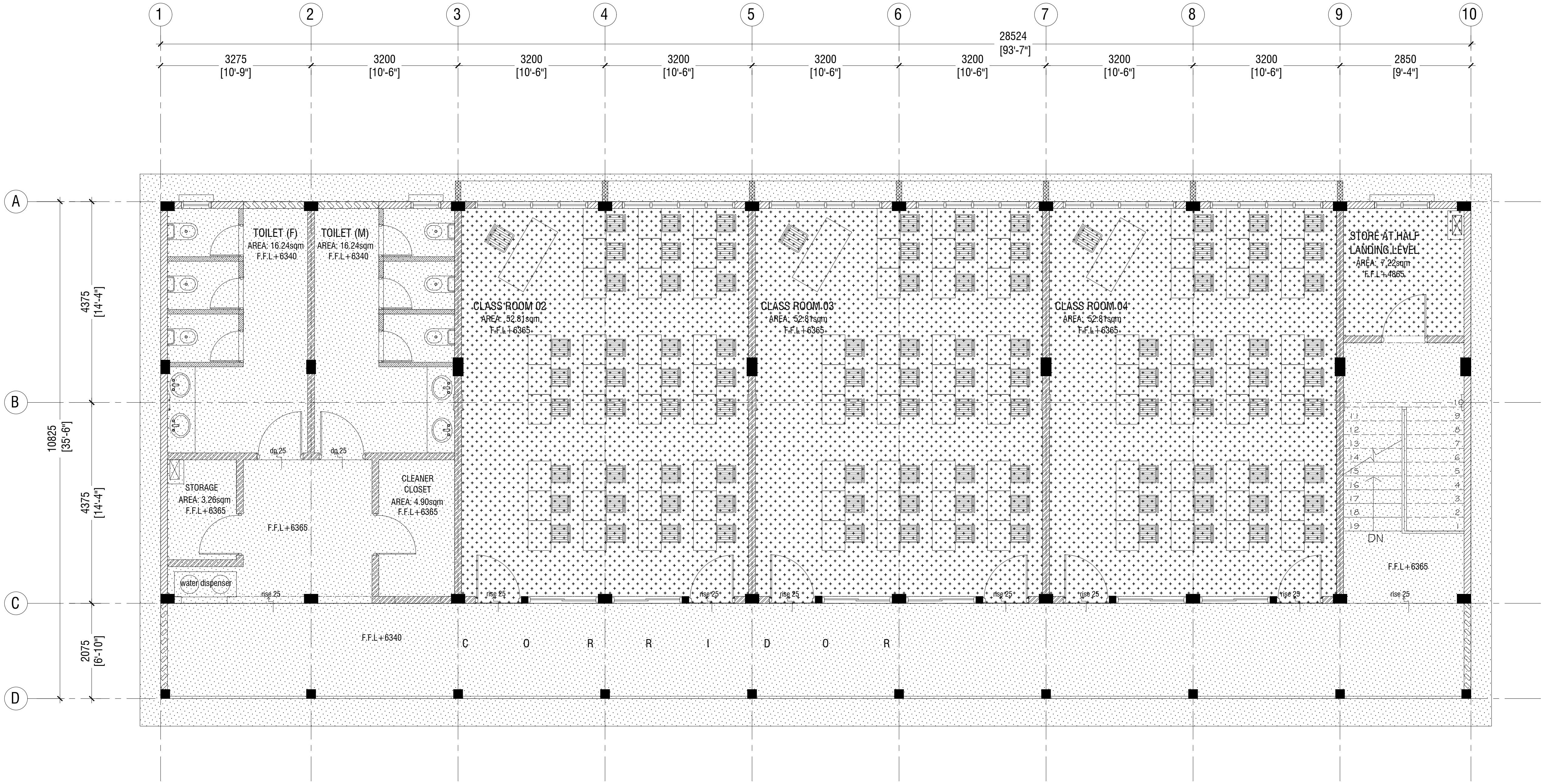
1
2
3
4
5
6
7
8
9
10
28524
[93'-7"]
3275
[10'-9"]
3200
[10'-6"]
3200
[10'-6"]
3200
[10'-6"]
3200
[10'-6"]
3200
[10'-6"]
3200
[10'-6"]
3200
[10'-6"]
2850
[9'-4"]
A
B
C
D
10825
[35'-6"]
4375
[14'-4"]
4375
[14'-4"]
2075
[6'-10"]
TOILET (F)
AREA: 16.24sqm
F.F.L+6340
TOILET (M)
AREA: 16.24sqm
F.F.L+6340
CLASS ROOM 02
AREA: 52.81sqm
F.F.L+6365
CLASS ROOM 03
AREA: 52.81sqm
F.F.L+6365
CLASS ROOM 04
AREA: 52.81sqm
F.F.L+6365
STORE AT HALF LANDING LEVEL
AREA: 7.22sqm
F.F.L+4865
dp 25
dp 25
STORAGE
AREA: 3.26sqm
F.F.L+6365
F.F.L+6365
CLEANER CLOSET
AREA: 4.90sqm
F.F.L+6365
water dispenser
rise 25
rise 25
rise 25
rise 25
rise 25
rise 25
rise 25
rise 25
1
2
3
4
5
6
7
8
9
10
11
12
13
14
15
16
17
18
19
DN
F.F.L+6365
F.F.L+6340
C O R R I D O R

LEGEND

CODE	DESCRIPTION
⁙	9mm THICK FIXED CEILING 'BORAL' OR EQUIVALENT PLASTERBOARD CEILING SYSTEM WITH TIMBER FRAMES, APPLIED WITH GROUND SMOOTH FINISH IN SELECTED PAINT
░	6mm THICK CEMENT BOARD ON ROOF EAVE/GABLE CEILING (ONE COAT OF PUTTY FOLLOWED BY SEALER AND 2 COATS OF PAINT)

SECOND FLOOR
REFLECTED CEILING PLAN

SCALE 1:100

0 0.5 1 2 3 4 5

M.Mulaku School (3 story)
Client: Ministry of Education

Project Number: RI/2020/006
Date: June 2021
Architect : Mariyam Irasha Shareef
Engineer : Mohamed Muththalib Waleed
Drawn by : Mariyam Leevan Jaleel
Services : Aishath Ahmed
Interior : -

Rev no	Date
--	----------
--	----------
--	----------
--	----------

RIYAN PRIVATE LIMITED

t : +9603315049 f : +9603310776
e : info@riyan.com.mv
w : www.riyan.com.mv
3rd floor, H. Azum, Ameeneemagu, Male'

Title: Second Floor Reflected Ceiling Plan

Page: A-17/26

The contents of these drawings remain as a property of Riyan Private Limited. Any use other that those expressly stated is a violation of this copyright

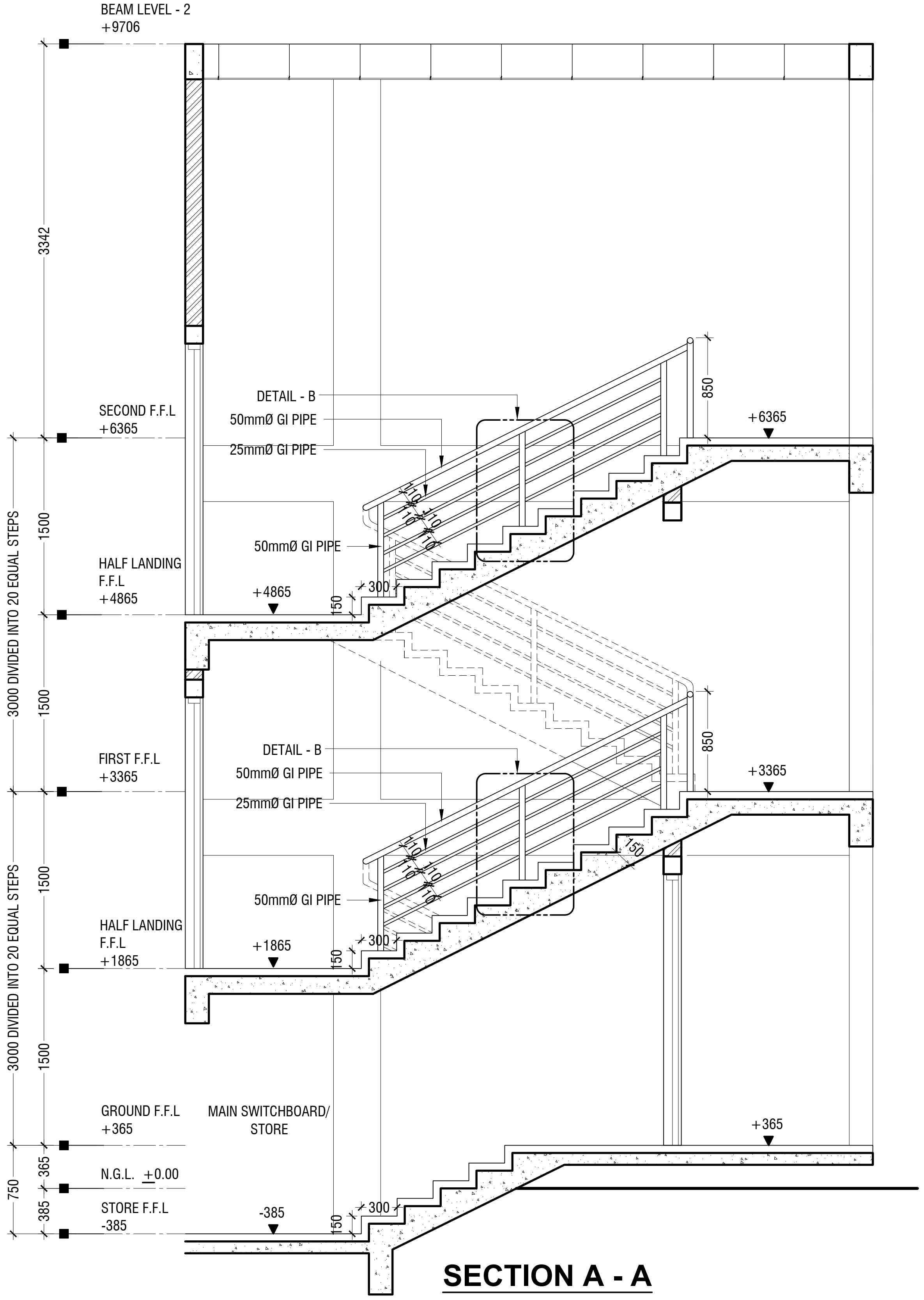
BEAM LEVEL - 2
+9706
3342
SECOND F.F.L
+6365
HALF LANDING
F.F.L
+4865
FIRST F.F.L
+3365
HALF LANDING
F.F.L
+1865
GROUND F.F.L
+365
N.G.L. +0.00
STORE F.F.L
-385
MAIN SWITCHBOARD/
STORE
3000 DIVIDED INTO 20 EQUAL STEPS
1500
750
365
385
DETAIL - B
50mmØ GI PIPE
25mmØ GI PIPE
50mmØ GI PIPE
850
+6365
+4865
+3365
+1865
+365
-385
300
150
110

SECTION A - A

SCALE 1:50

0 0.25 0.5 1 1.5 2 2.5

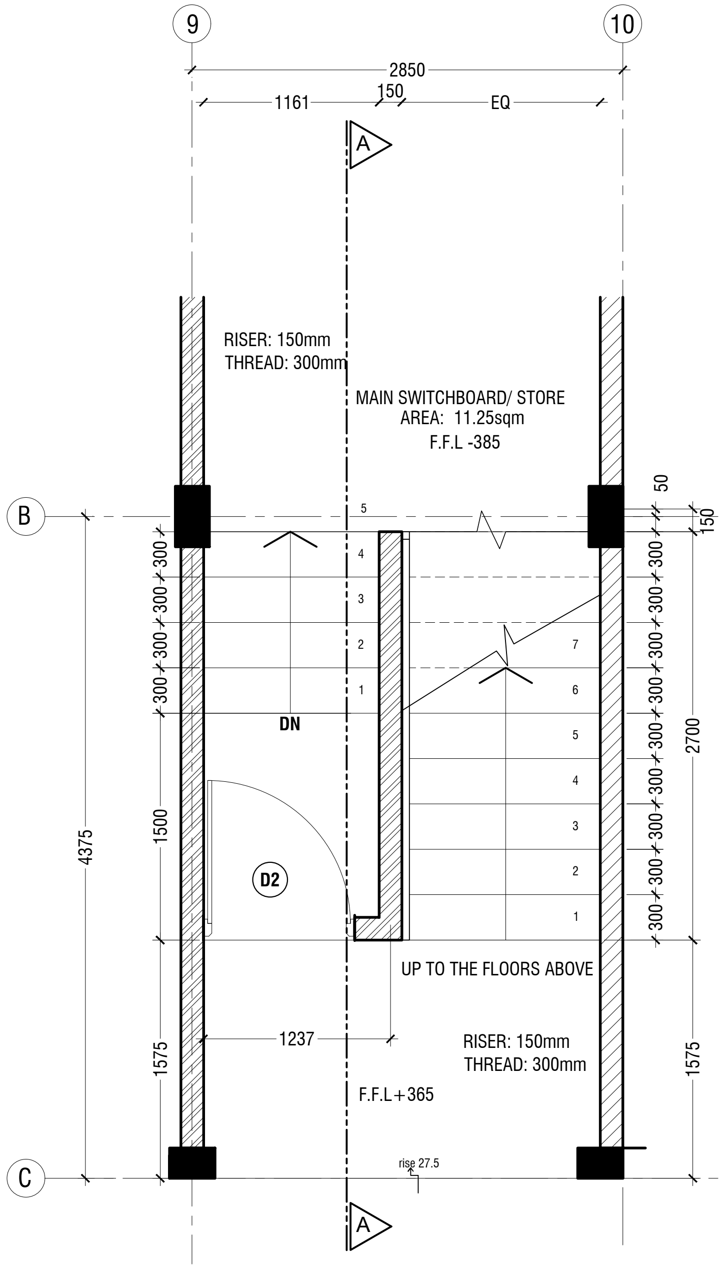
9
10
2850
1161
150
EQ
A
B
C
RISER: 150mm
THREAD: 300mm
MAIN SWITCHBOARD/ STORE
AREA: 11.25sqm
F.F.L -385
DN
D2
UP TO THE FLOORS ABOVE
1237
RISER: 150mm
THREAD: 300mm
F.F.L+365
rise 27.5
4375
1500
1575
2700
50
150
300

GROUND FLOOR STAIRCASE PLAN

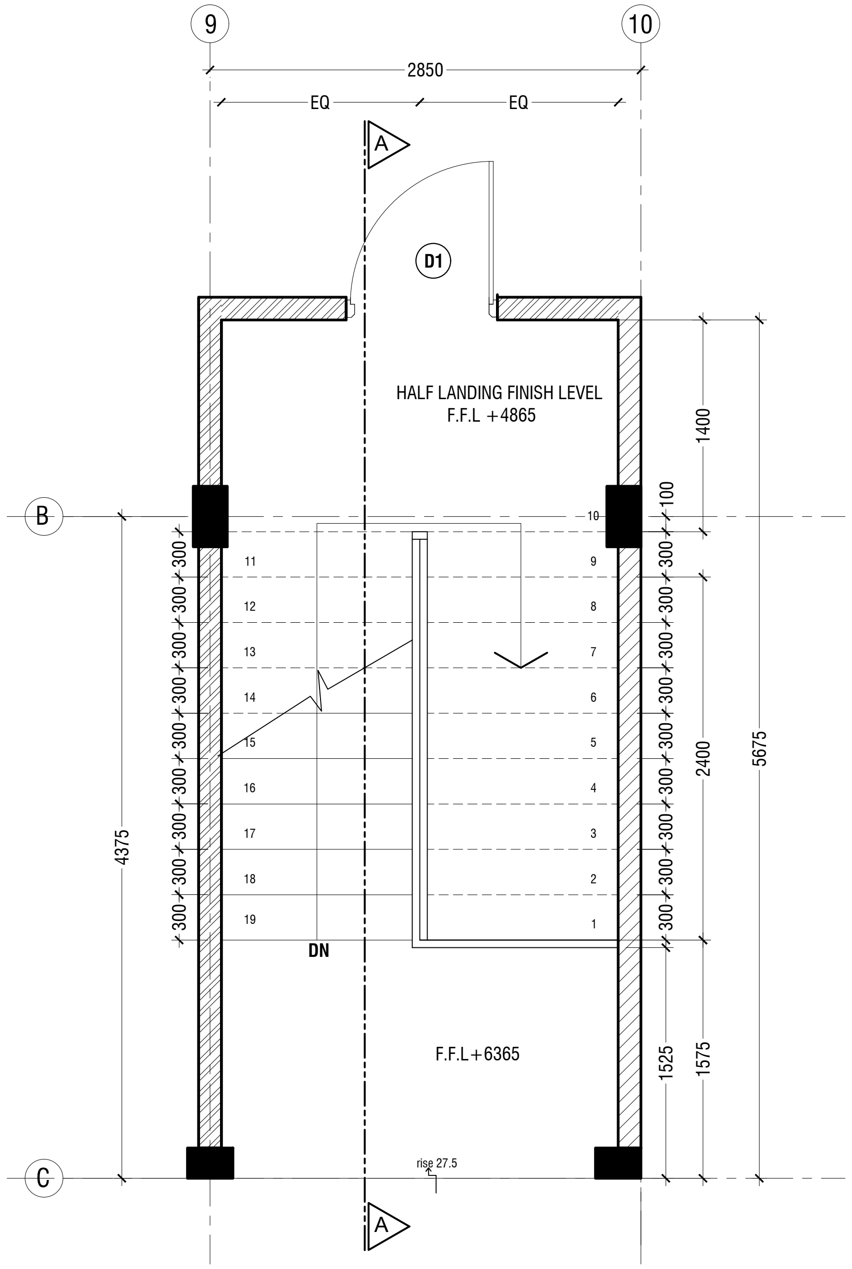
9
10
2850
EQ
EQ
A
B
C
D1
HALF LANDING FINISH LEVEL
F.F.L +4865
DN
F.F.L+6365
rise 27.5
4375
1400
100
2400
5675
1525
1575
300

TYPICAL STAIRCASE PLAN

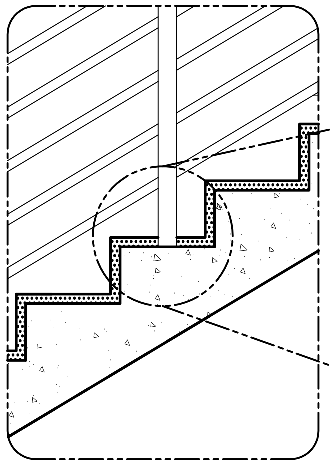

DETAIL B

SCALE 1:20

0 0.1 0.2 0.4 0.6 0.8 1

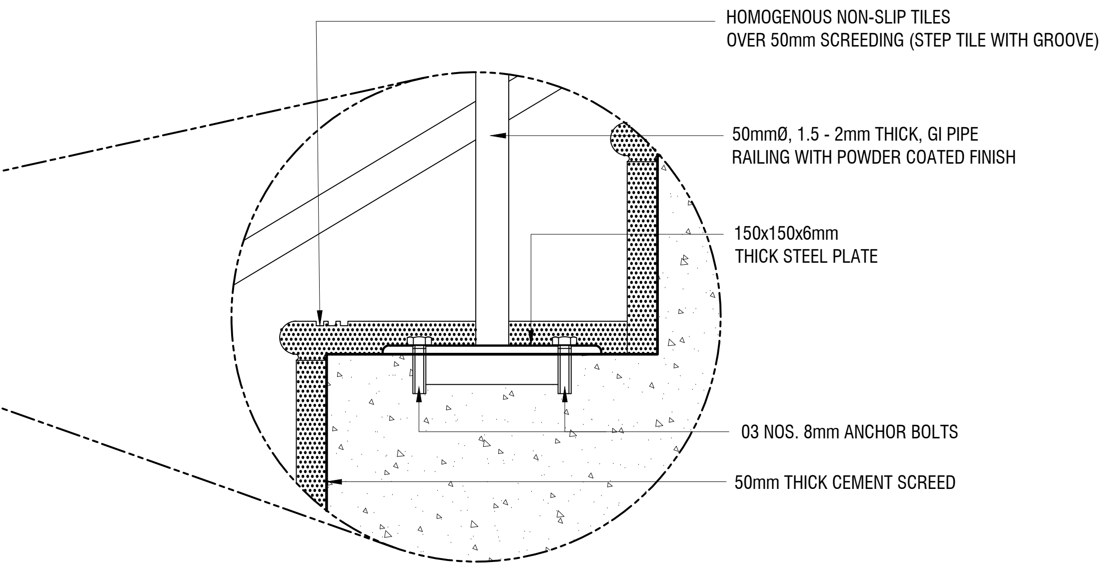
HOMOGENOUS NON-SLIP TILES
OVER 50mm SCREEDING (STEP TILE WITH GROOVE)
50mmØ, 1.5 - 2mm THICK, GI PIPE
RAILING WITH POWDER COATED FINISH
150x150x6mm
THICK STEEL PLATE
03 NOS. 8mm ANCHOR BOLTS
50mm THICK CEMENT SCREED

DETAIL - 1
STAIRCASE DETAILS

SCALE 1:20

0 0.1 0.2 0.4 0.6 0.8 1

M.Mulaku School (3 story)
Client: Ministry of Education

Project Number: RI/2020/006
Date: June 2021
Architect : Mariyam Irasha Shareef
Engineer : Mohamed Muththalib Waleed
Drawn by : Mariyam Leevan Jaleel
Services : Aishath Ahmed
Interior : -

Rev no	Date
-	------------
-	------------
-	------------
-	------------

RIYAN PRIVATE LIMITED

t : +9603315049 f : +9603310776
e : info@riyan.com.mv
w : www.riyan.com.mv
3rd floor, H. Azum, Ameeneemagu, Male'

Title: Staircase Details

Page: A-18/26

The contents of these drawings remain as a property of Riyan Private Limited. Any use other that those expressly stated is a violation of this copyright

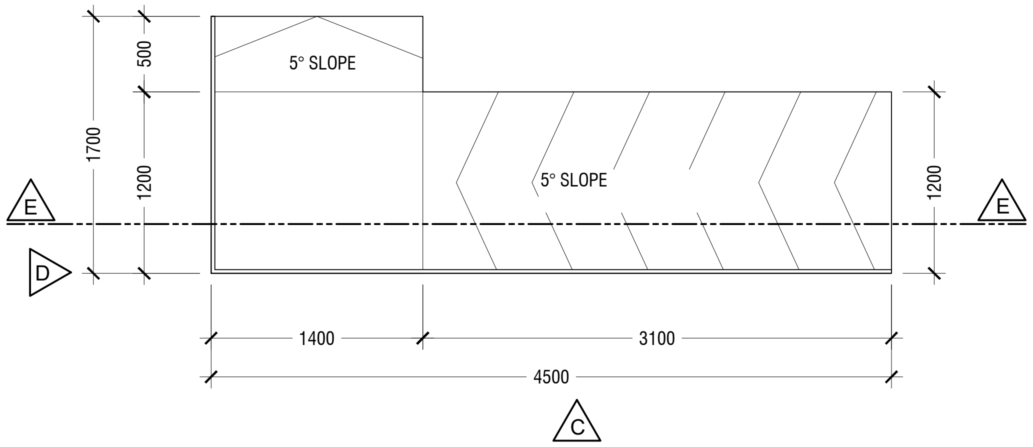
500
1700
1200
5° SLOPE
5° SLOPE
1200
E
E
D
1400
3100
4500
C

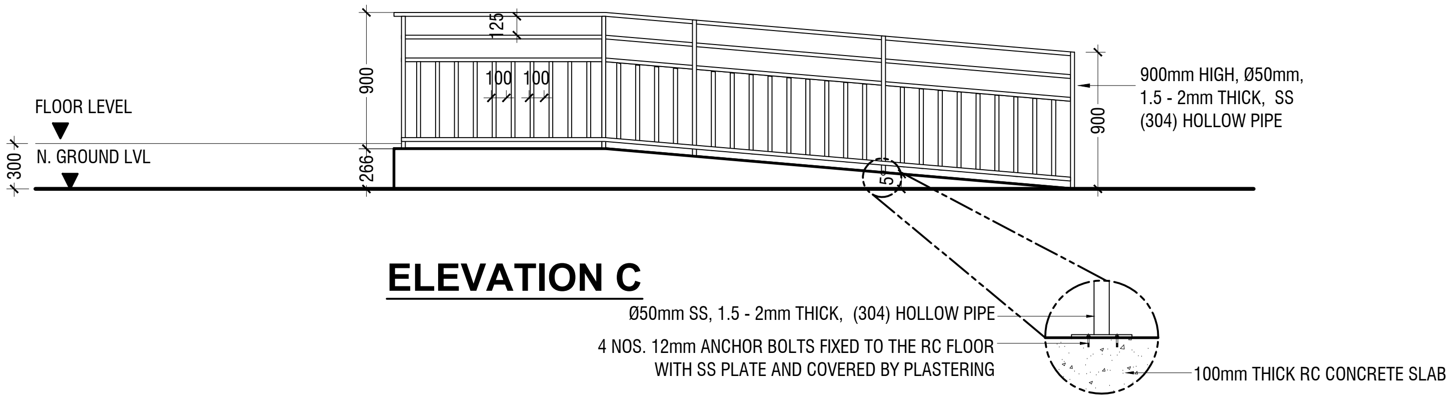
FLOOR LEVEL
N. GROUND LVL
300
900
266
125
100 100
900
900mm HIGH, Ø50mm, 1.5 - 2mm THICK, SS (304) HOLLOW PIPE
5
Ø50mm SS, 1.5 - 2mm THICK, (304) HOLLOW PIPE
4 NOS. 12mm ANCHOR BOLTS FIXED TO THE RC FLOOR WITH SS PLATE AND COVERED BY PLASTERING
100mm THICK RC CONCRETE SLAB

ELEVATION C

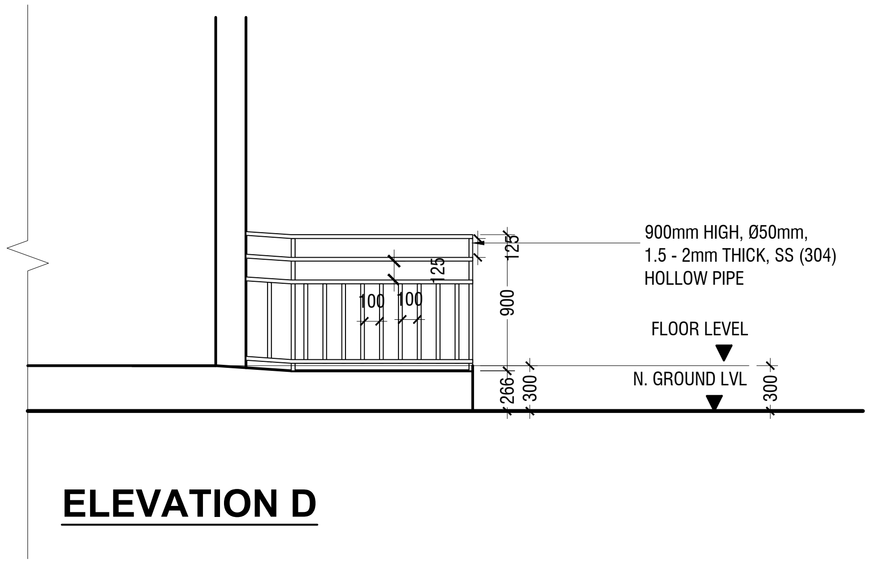
100
125
900
125
900mm HIGH, Ø50mm, 1.5 - 2mm THICK, SS (304) HOLLOW PIPE
FLOOR LEVEL
N. GROUND LVL
266
300
300

ELEVATION D

DETAIL - 2
MAIN ENTRANCE RAMP DETAILS

SCALE 1:50

0 0.25 0.5 1 1.5 2 2.5

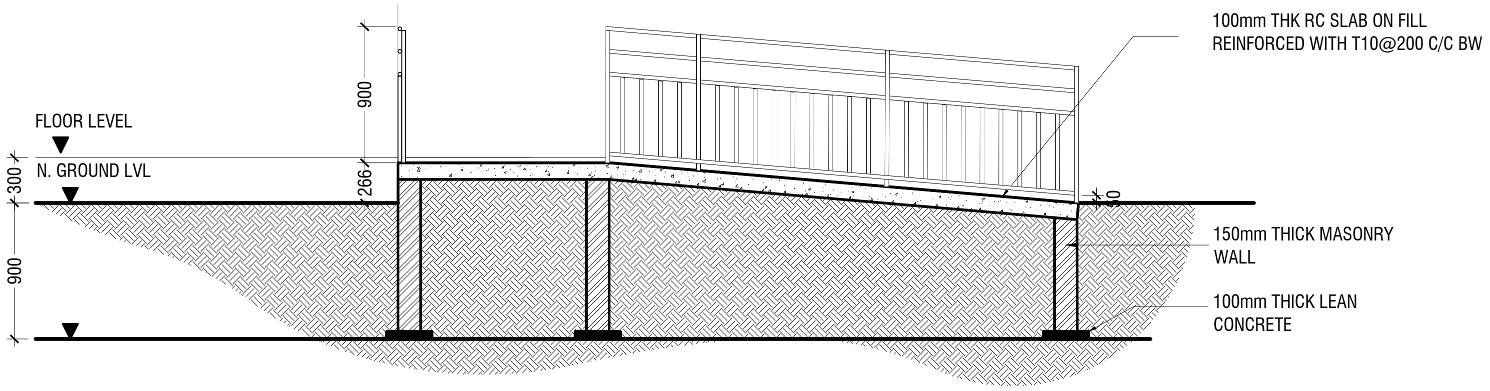
900
FLOOR LEVEL
N. GROUND LVL
300
266
900
100mm THK RC SLAB ON FILL REINFORCED WITH T10@200 C/C BW
30
150mm THICK MASONRY WALL
100mm THICK LEAN CONCRETE

SECTION E-E

M.Mulaku School (3 story)
Client: Ministry of Education

Project Number: RI/2020/006
Date: June 2021
Architect : Mariyam Irasha Shareef
Engineer : Mohamed Muththalib Waleed
Drawn by : Mariyam Leevan Jaleel
Services : Aishath Ahmed
Interior : -

Rev no	Date
--	----------
--	----------
--	----------
--	----------

RIYAN PRIVATE LIMITED

t : +9603315049 f : +9603310776
e : info@riyan.com.mv
w : www.riyan.com.mv
3rd floor, H. Azum, Ameeneemagu, Male'

Title: Ramp Details

Page: A-19/26

The contents of these drawings remain as a property of Riyan Private Limited. Any use other that those expressly stated is a violation of this copyright

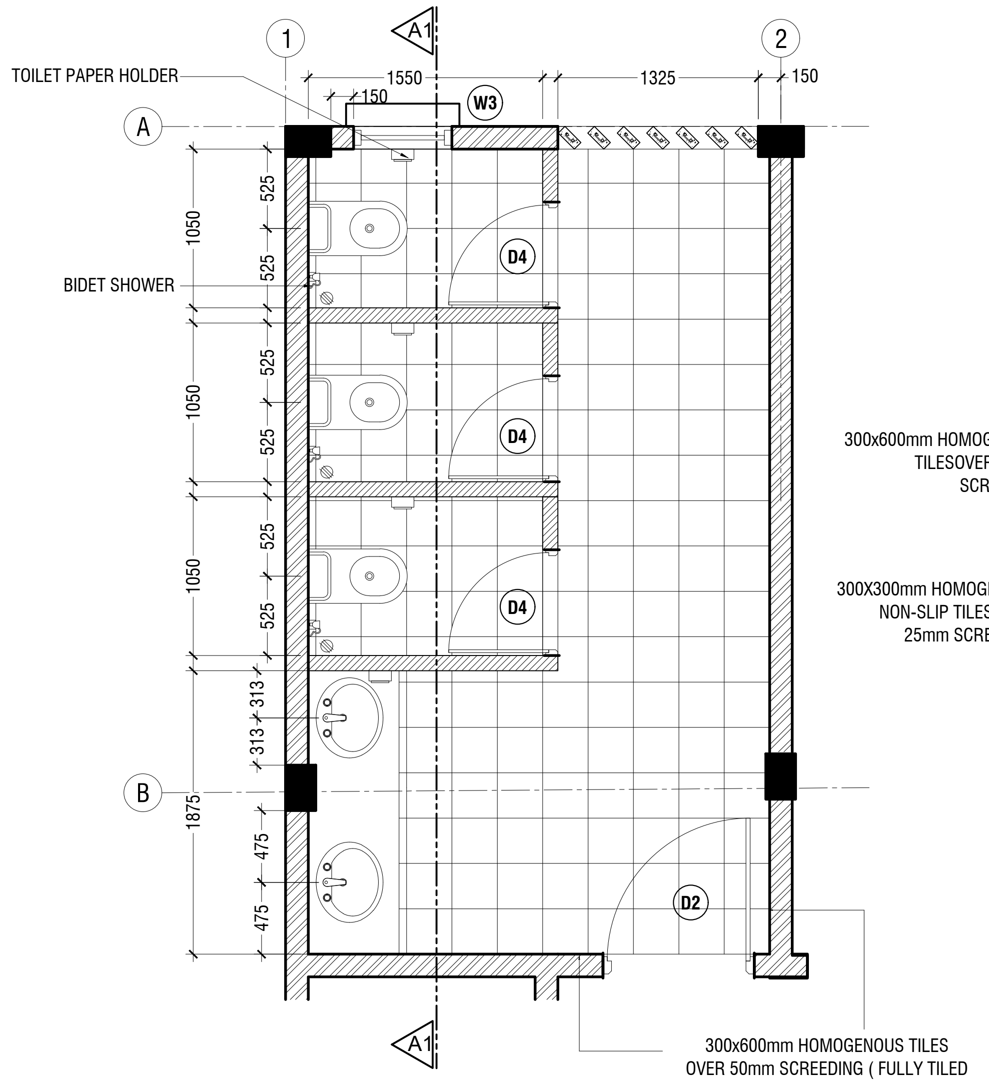
1
A1
2
TOILET PAPER HOLDER
1550
150
W3
1325
150
A
1050
525
525
BIDET SHOWER
1050
525
525
1050
525
525
D4
D4
D4
313
313
B
1875
475
475
D2
A1
300x600mm HOMOGENOUS TILES
OVER 50mm SCREEDING (FULLY TILED
AS THE OTHER WALLS)

TYPICAL TOILET PLAN

SCALE 1:50

0 0.25 0.5 1 1.5 2 2.5

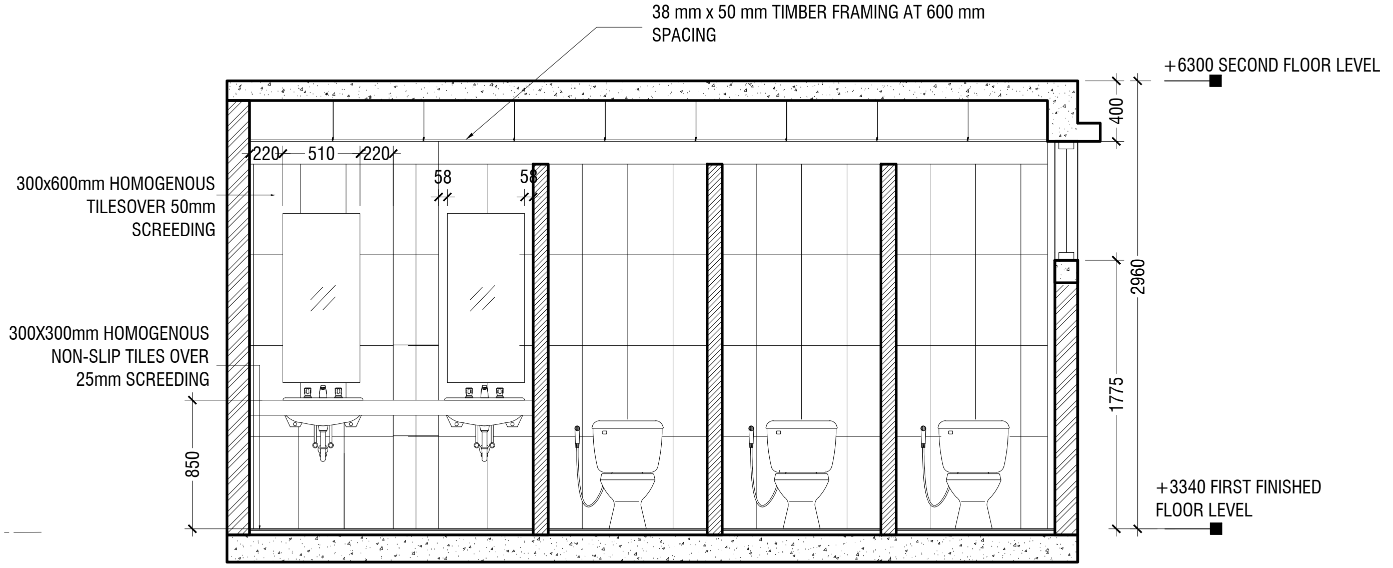
38 mm x 50 mm TIMBER FRAMING AT 600 mm
SPACING
+6300 SECOND FLOOR LEVEL
300x600mm HOMOGENOUS
TILESOVER 50mm
SCREEDING
220
510
220
58
58
400
300X300mm HOMOGENOUS
NON-SLIP TILES OVER
25mm SCREEDING
2960
1775
850
+3340 FIRST FINISHED
FLOOR LEVEL

SECTION A1-A1

SCALE 1:50

0 0.25 0.5 1 1.5 2 2.5

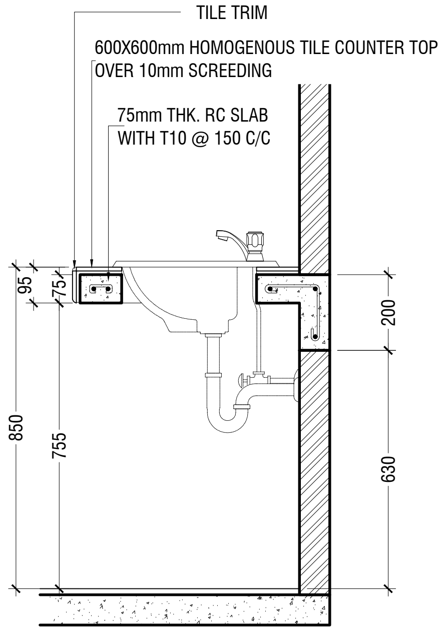
TILE TRIM
600X600mm HOMOGENOUS TILE COUNTER TOP
OVER 10mm SCREEDING
75mm THK. RC SLAB
WITH T10 @ 150 C/C
95
75
200
850
755
630

COUNTER TOP DETAILS

SCALE 1:20

0 0.1 0.2 0.4 0.6 0.8 1

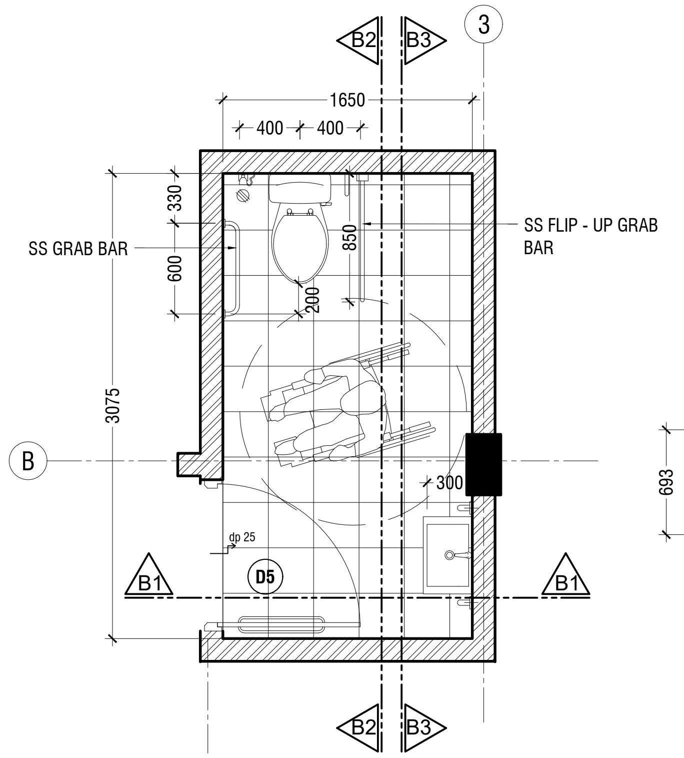
B2
B3
3
1650
400
400
330
SS GRAB BAR
600
850
200
SS FLIP - UP GRAB
BAR
3075
B
300
dp 25
D5
B1
B1
B2
B3

TOILET FOR PERSONS WITH DISABILITIES PLAN

SCALE 1:50

0 0.25 0.5 1 1.5 2 2.5

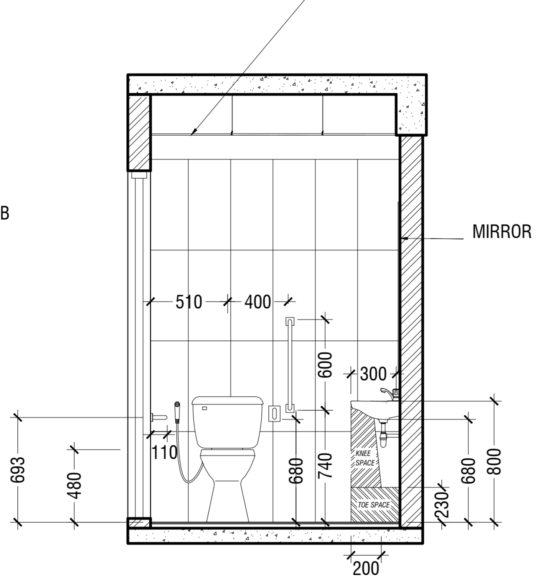
38 mm x 50 mm TIMBER FRAMING
AT 600 mm SPACING
MIRROR
510
400
600
300
110
693
480
680
740
230
680
800
200

SECTION B1-B1

SCALE 1:50

0 0.25 0.5 1 1.5 2 2.5

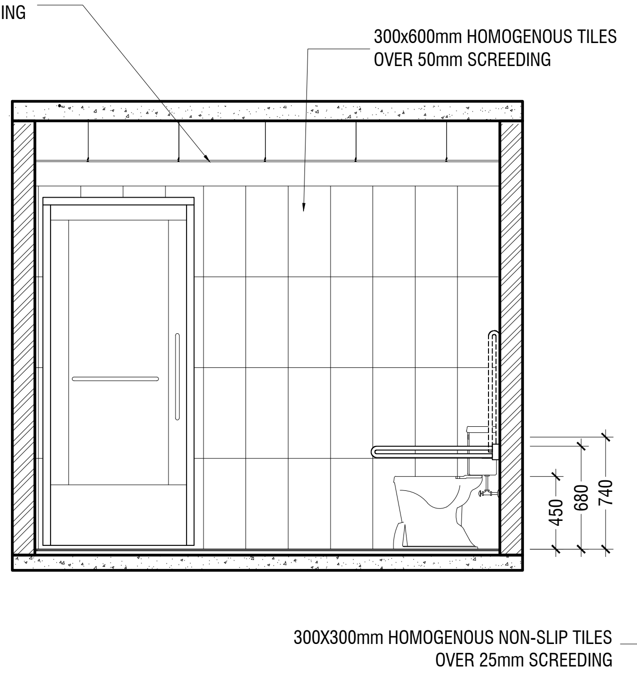
300x600mm HOMOGENOUS TILES
OVER 50mm SCREEDING
450
680
740
300X300mm HOMOGENOUS NON-SLIP TILES
OVER 25mm SCREEDING

SECTION B2-B2

SCALE 1:50

0 0.25 0.5 1 1.5 2 2.5

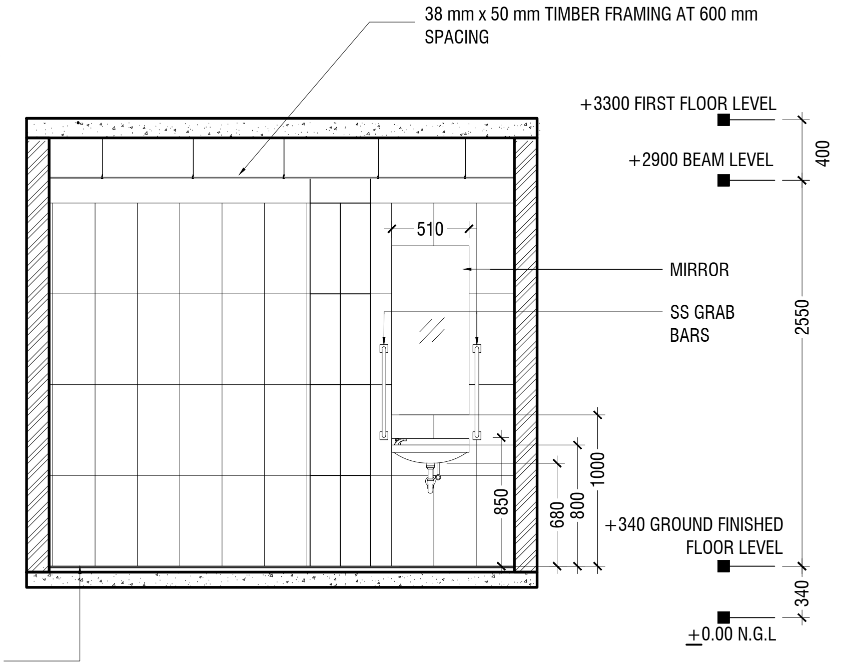
38 mm x 50 mm TIMBER FRAMING AT 600 mm
SPACING
+3300 FIRST FLOOR LEVEL
+2900 BEAM LEVEL
400
510
MIRROR
SS GRAB
BARS
2550
1000
850
680
800
+340 GROUND FINISHED
FLOOR LEVEL
340
+0.00 N.G.L

NOTE:
ALL THE MATERIALS FOR FIXTURES SHALL BE APPROVED
BY THE ARCHITECT/CONSULTANT BEFORE INSTALLATION

GRAB BARS OF THE DISABLE TOILET SHALL BE AS PER MANUFACTURE'S DETAIL

SECTION B3-B3

SCALE 1:50

0 0.25 0.5 1 1.5 2 2.5

DETAIL - 3
TOILET DETAILS

SCALE 1:50

0 0.25 0.5 1 1.5 2 2.5

M.Mulaku School (3 story)
Client: Ministry of Education

Project Number: RI/2020/006
Date: June 2021
Architect : Mariyam Irasha Shareef
Engineer : Mohamed Muththalib Waleed
Drawn by : Mariyam Leevan Jaleel
Services : Aishath Ahmed
Interior : -

Rev no	Date
--	------------
--	------------
--	------------
--	------------

RIYAN PRIVATE LIMITED

t : +9603315049 f : +9603310776
e : info@riyan.com.mv
w : www.riyan.com.mv
3rd floor, H. Azum, Ameeneemagu, Male'

Title: Typical Toilet Details

Page: A-20/26

The contents of these drawings remain as a property of Riyan Private Limited. Any use other that those expressly stated is a violation of this copyright

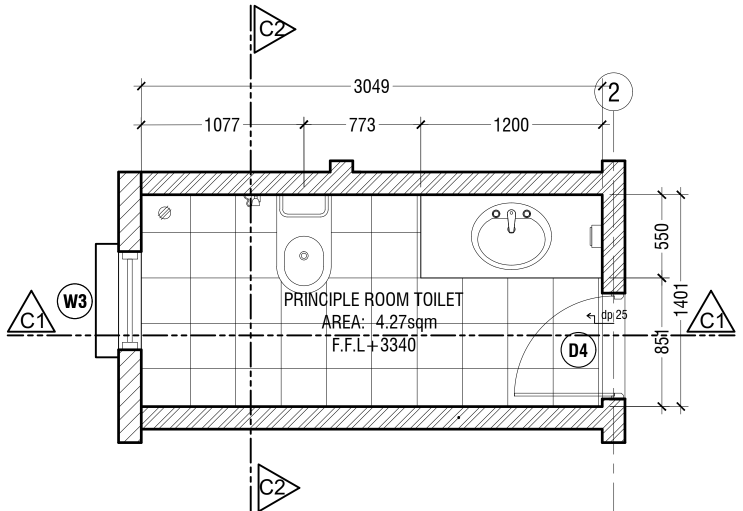
C2
3049
1077
773
1200
2
550
1401
851
W3
C1
C1
PRINCIPLE ROOM TOILET
AREA: 4.27sqm
F.F.L+3340
dp 25
D4
C2

PRINCIPAL TOILET PLAN

SCALE 1:50

0 0.25 0.5 1 1.5 2 2.5

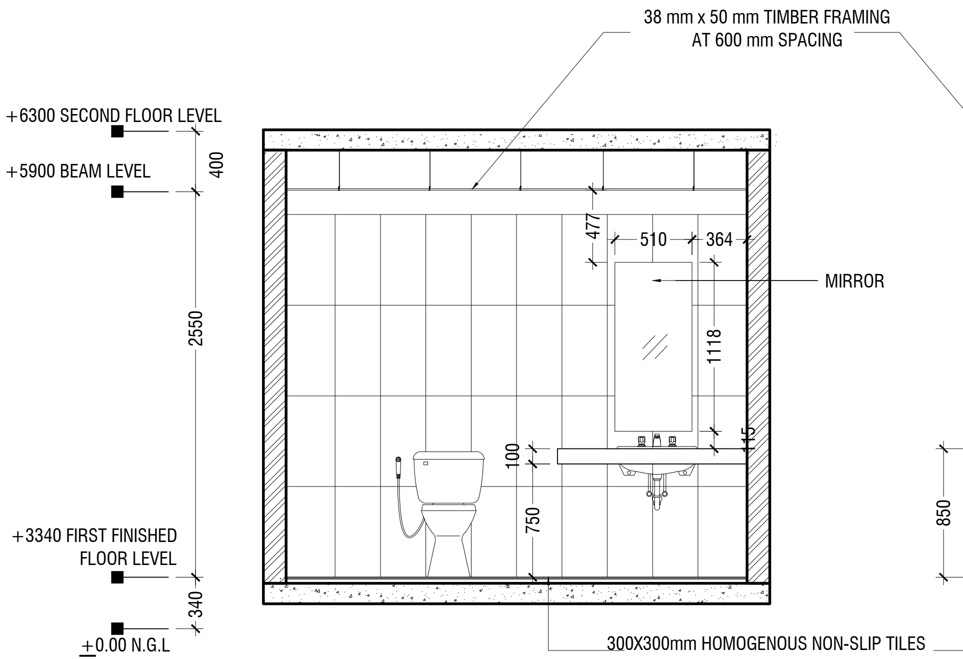
38 mm x 50 mm TIMBER FRAMING
AT 600 mm SPACING
+6300 SECOND FLOOR LEVEL
+5900 BEAM LEVEL
400
2550
477
510
364
MIRROR
1118
115
100
750
+3340 FIRST FINISHED
FLOOR LEVEL
340
+0.00 N.G.L
300X300mm HOMOGENOUS NON-SLIP TILES
OVER 25mm SCREEDING

SECTION C1

SCALE 1:50

0 0.25 0.5 1 1.5 2 2.5

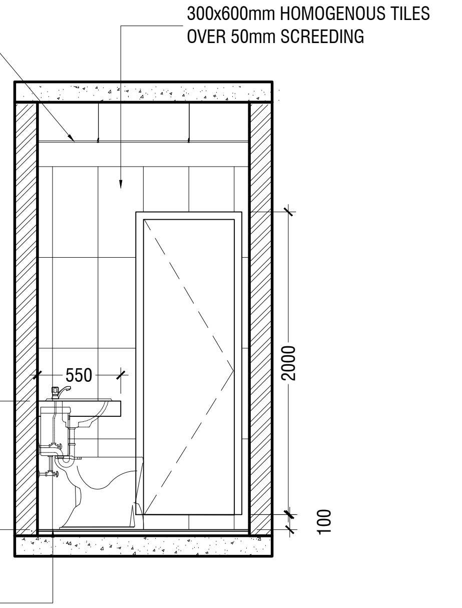
300x600mm HOMOGENOUS TILES
OVER 50mm SCREEDING
550
2000
850
100

SECTION C2

SCALE 1:50

0 0.25 0.5 1 1.5 2 2.5

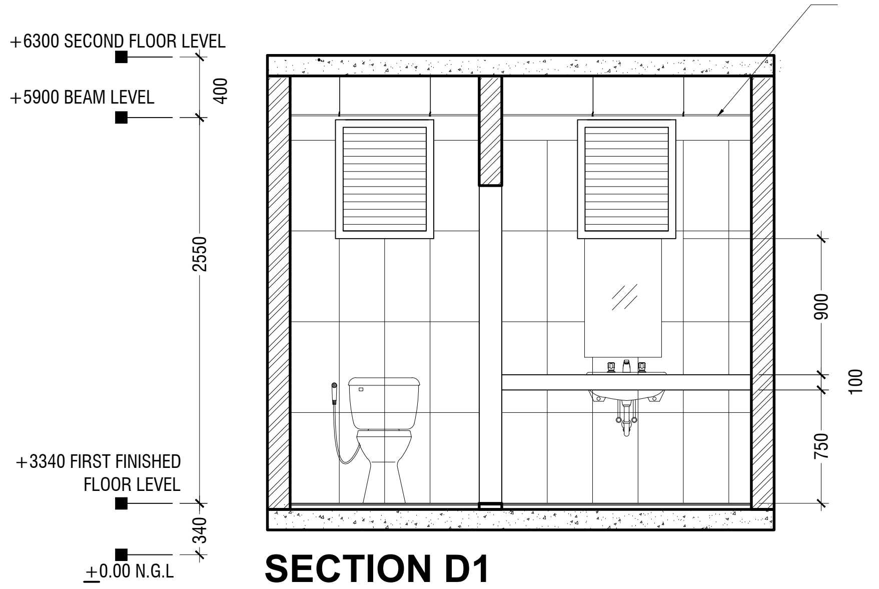
+6300 SECOND FLOOR LEVEL
+5900 BEAM LEVEL
400
2550
900
100
750
+3340 FIRST FINISHED
FLOOR LEVEL
340
+0.00 N.G.L

SECTION D1

SCALE 1:50

0 0.25 0.5 1 1.5 2 2.5

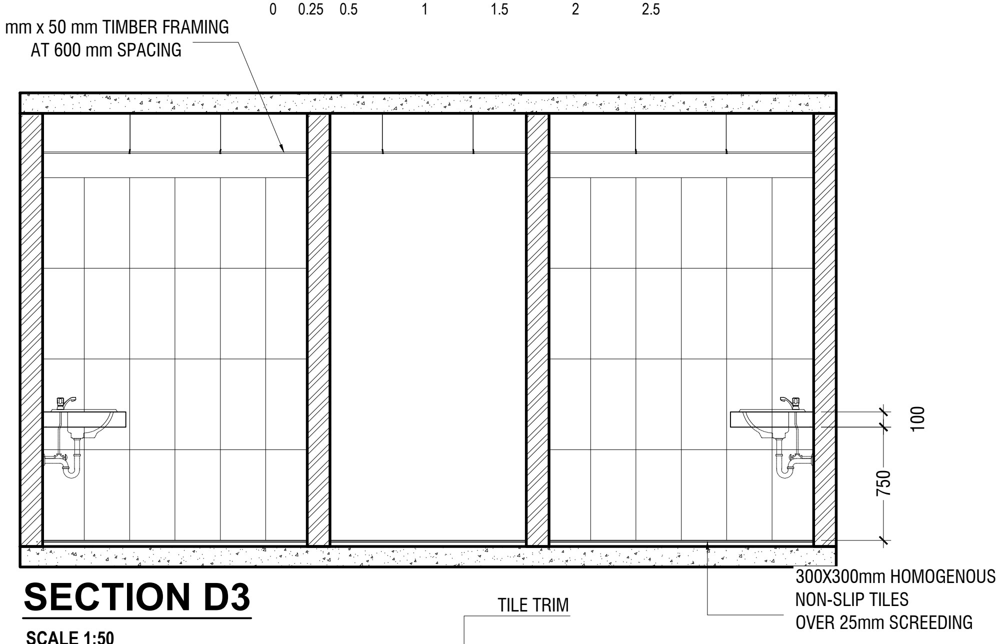
38 mm x 50 mm TIMBER FRAMING
AT 600 mm SPACING
100
750
300X300mm HOMOGENOUS
NON-SLIP TILES
OVER 25mm SCREEDING

SECTION D3

SCALE 1:50

0 0.25 0.5 1 1.5 2 2.5

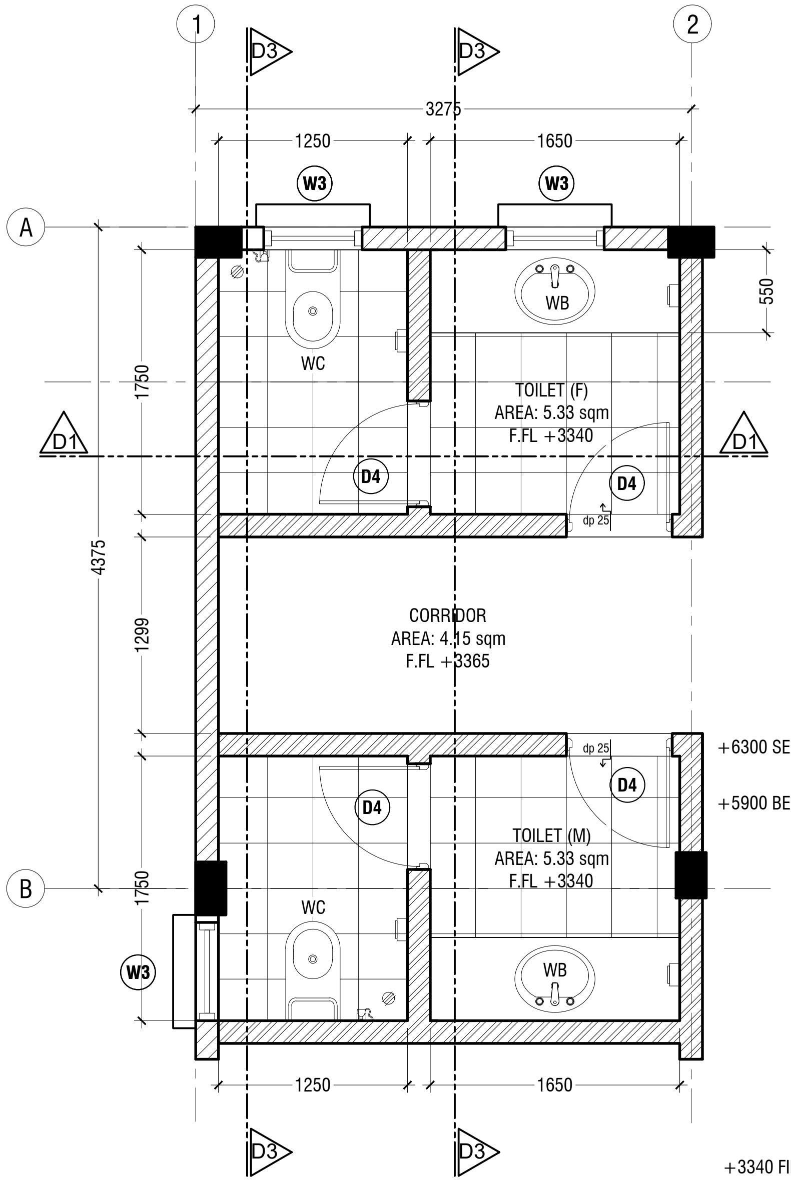
1
D3
D3
2
3275
1250
1650
W3
W3
A
550
WB
WC
1750
TOILET (F)
AREA: 5.33 sqm
F.FL +3340
D1
D1
D4
D4
dp 25
4375
1299
CORRIDOR
AREA: 4.15 sqm
F.FL +3365
dp 25
D4
D4
TOILET (M)
AREA: 5.33 sqm
F.FL +3340
B
1750
WC
W3
WB
1250
1650
D3
D3

DETAIL - 3A
TOILET DETAILS

SCALE 1:50

0 0.25 0.5 1 1.5 2 2.5

STAFF TOILET PLAN

SCALE 1:50

0 0.25 0.5 1 1.5 2 2.5

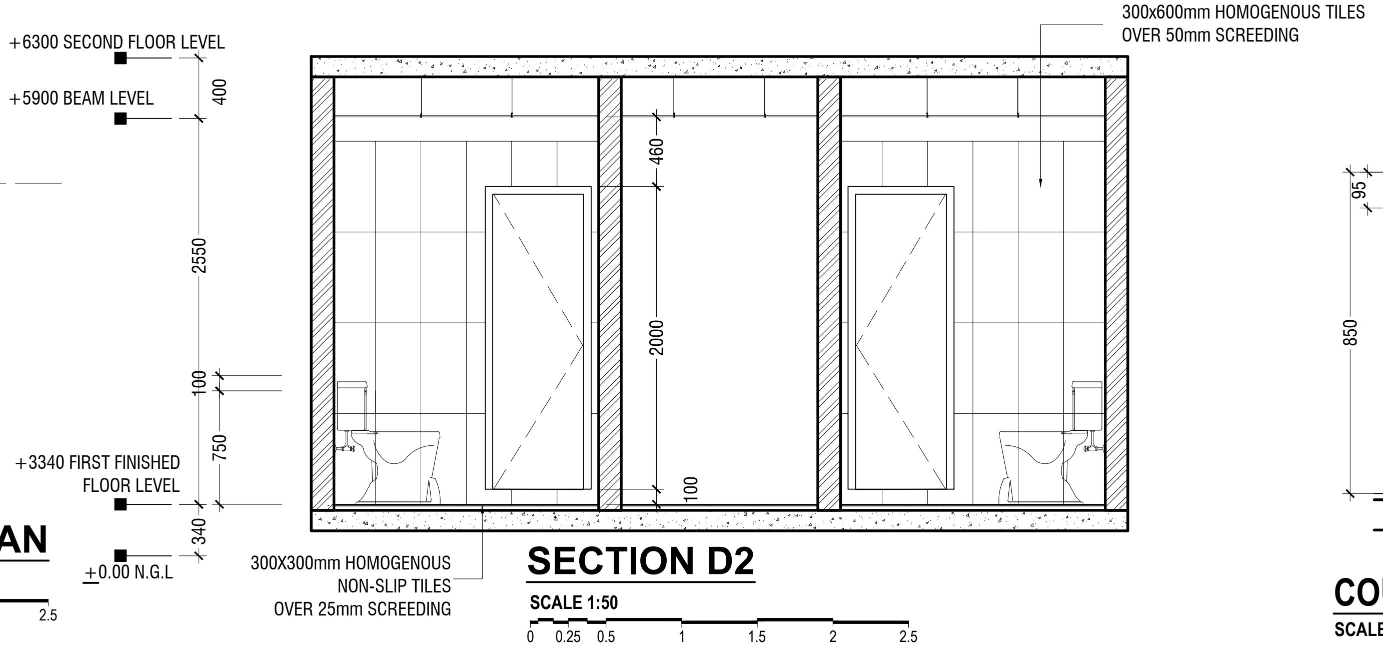
300x600mm HOMOGENOUS TILES
OVER 50mm SCREEDING
+6300 SECOND FLOOR LEVEL
+5900 BEAM LEVEL
400
2550
100
750
+3340 FIRST FINISHED
FLOOR LEVEL
340
+0.00 N.G.L
460
2000
100
300X300mm HOMOGENOUS
NON-SLIP TILES
OVER 25mm SCREEDING

SECTION D2

SCALE 1:50

0 0.25 0.5 1 1.5 2 2.5

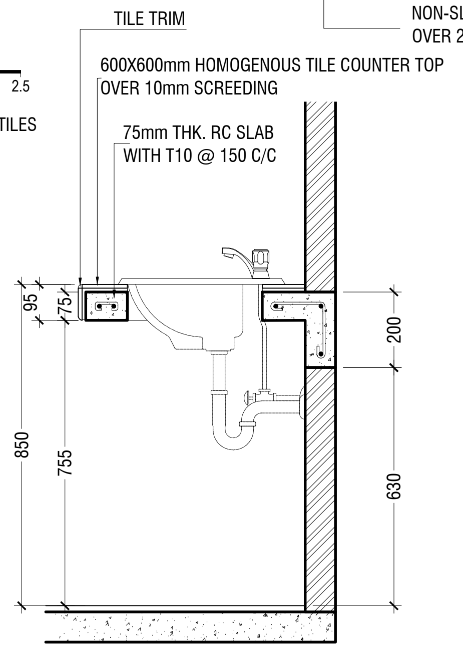
TILE TRIM
600X600mm HOMOGENOUS TILE COUNTER TOP
OVER 10mm SCREEDING
75mm THK. RC SLAB
WITH T10 @ 150 C/C
95
75
200
850
755
630

COUNTER TOP DETAILS

SCALE 1:20

0 0.1 0.2 0.4 0.6 0.8 1

M.Mulaku School (3 story)
Client: Ministry of Education

Project Number: RI/2020/006
Date: June 2021
Architect : Mariyam Irasha Shareef
Engineer : Mohamed Muththalib Waleed
Drawn by : Mariyam Leevan Jaleel
Services : Aishath Ahmed
Interior : -

Rev no	Date
-	-
-	-
-	-

RIYAN PRIVATE LIMITED

t : +9603315049 f : +9603310776
e : info@riyan.com.mv
w : www.riyan.com.mv
3rd floor, H. Azum, Ameeneemagu, Male'

Title: Typical Toilet Details

Page: A-21/26

The contents of these drawings remain as a property of Riyan Private Limited. Any use other that those expressly stated is a violation of this copyright

PLAN

SCALE 1:20

0 0.1 0.2 0.4 0.6 0.8 1

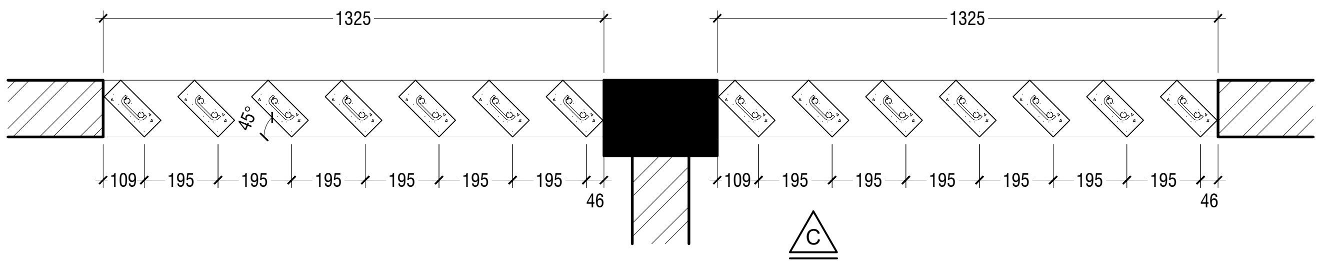
1325
1325
45°
109
195
195
195
195
195
195
46
109
195
195
195
195
195
195
46
C

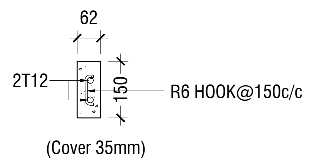
62
2T12
150
R6 HOOK@150c/c
(Cover 35mm)

RC FIN DETAIL

SCALE 1:20

0 0.1 0.2 0.4 0.6 0.8 1

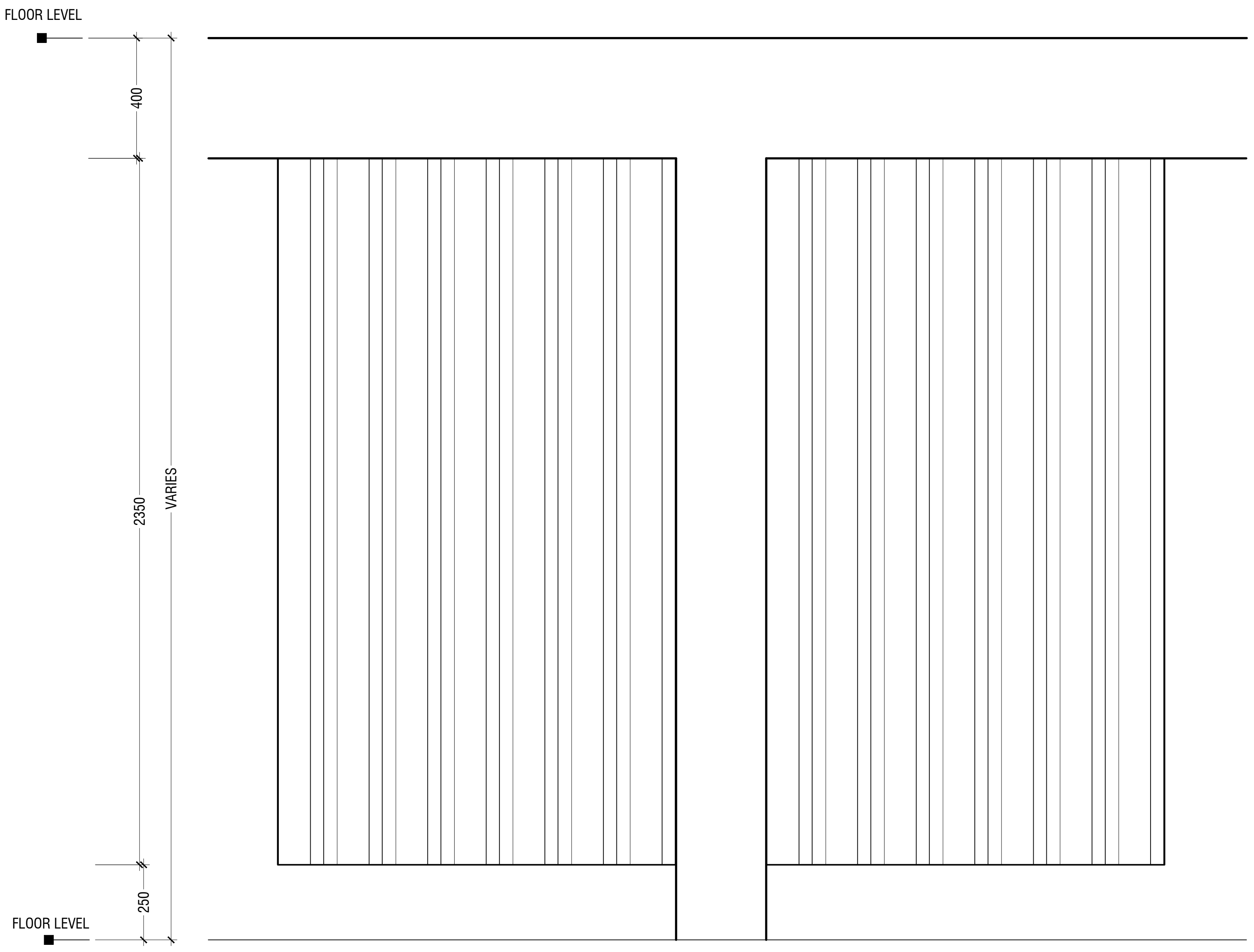
FLOOR LEVEL
400
2350
VARIES
250
FLOOR LEVEL

ELEVATION - C

SCALE 1:20

0 0.1 0.2 0.4 0.6 0.8 1

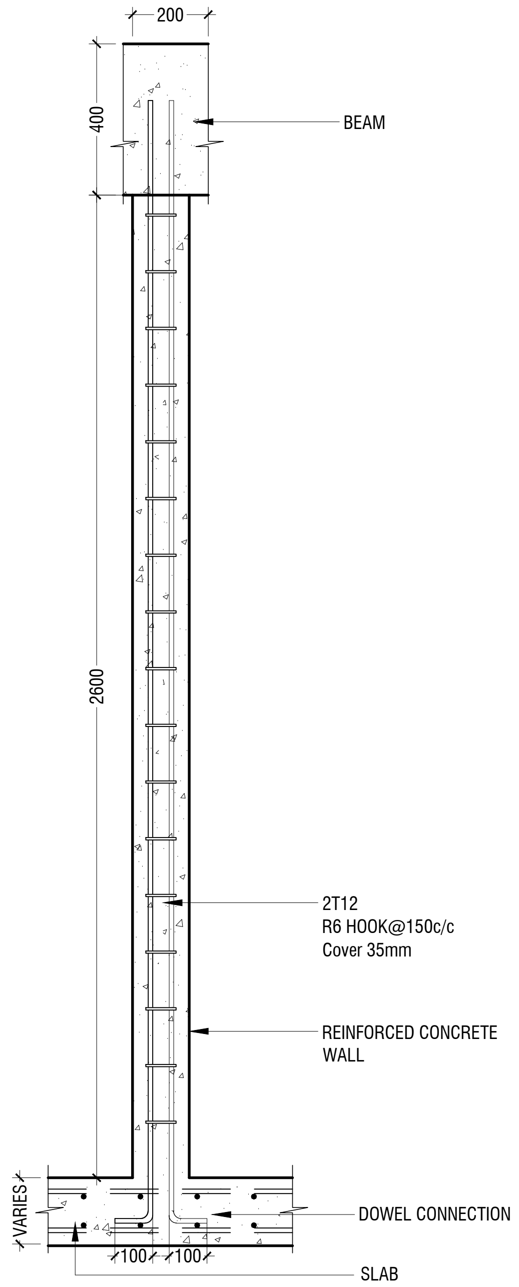
200
400
BEAM
2600
2T12
R6 HOOK@150c/c
Cover 35mm
REINFORCED CONCRETE
WALL
VARIES
DOWEL CONNECTION
100
100
SLAB

SECTION C-C

SCALE 1:20

0 0.1 0.2 0.4 0.6 0.8 1

NOTE:-
FLOOR TO FLOOR HEIGHT VARIES AND WILL BE SUBJECTED TO CHANGES

DETAIL - 4
RC FIN DETAILS (TOILET)

SCALE 1:20

0 0.1 0.2 0.4 0.6 0.8 1

M.Mulaku School (3 story)
Client: Ministry of Education

Project Number: RI/2020/006
Date: June 2021
Architect : Mariyam Irasha Shareef
Engineer : Mohamed Muththalib Waleed
Drawn by : Mariyam Leevan Jaleel
Services : Aishath Ahmed
Interior : -

Rev no	Date
--	------------
--	------------
--	------------
--	------------

RIYAN PRIVATE LIMITED

t : +9603315049 f : +9603310776
e : info@riyan.com.mv
w : www.riyan.com.mv
3rd floor, H. Azum, Ameeneemagu, Male'

Title: RC Fins Detail
(Toilet)

Page: A-22/26

The contents of these drawings remain as a property of Riyan Private Limited. Any use other that those expressly stated is a violation of this copyright

PLAN

SCALE 1:20

0 0.1 0.2 0.4 0.6 0.8 1

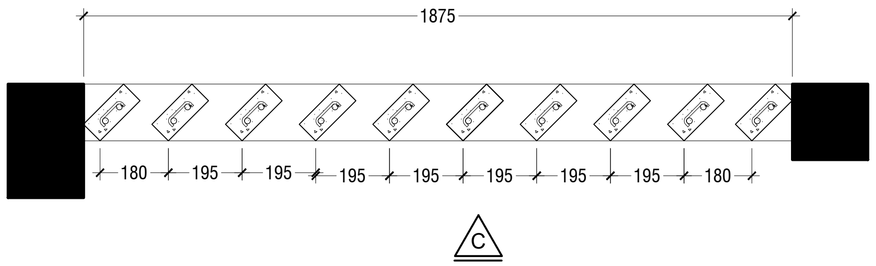
1875
180
195
195
195
195
195
195
195
180
C

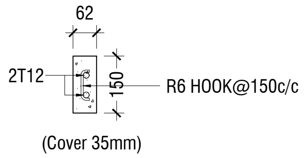
62
2T12
150
R6 HOOK@150c/c
(Cover 35mm)

RC FIN DETAIL

SCALE 1:20

0 0.1 0.2 0.4 0.6 0.8 1

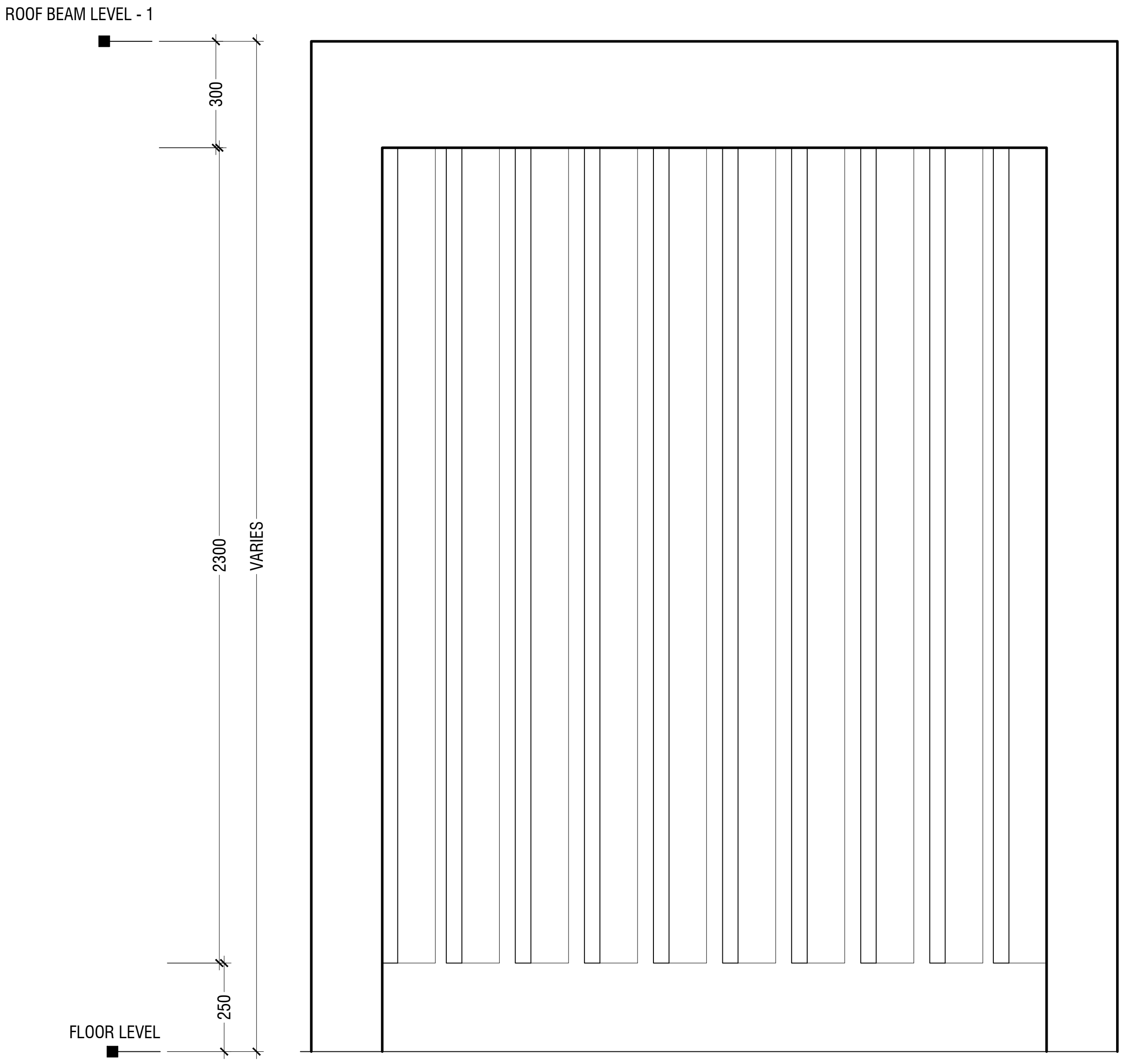
ROOF BEAM LEVEL - 1
300
2300
VARIES
250
FLOOR LEVEL

ELEVATION - C

SCALE 1:20

0 0.1 0.2 0.4 0.6 0.8 1

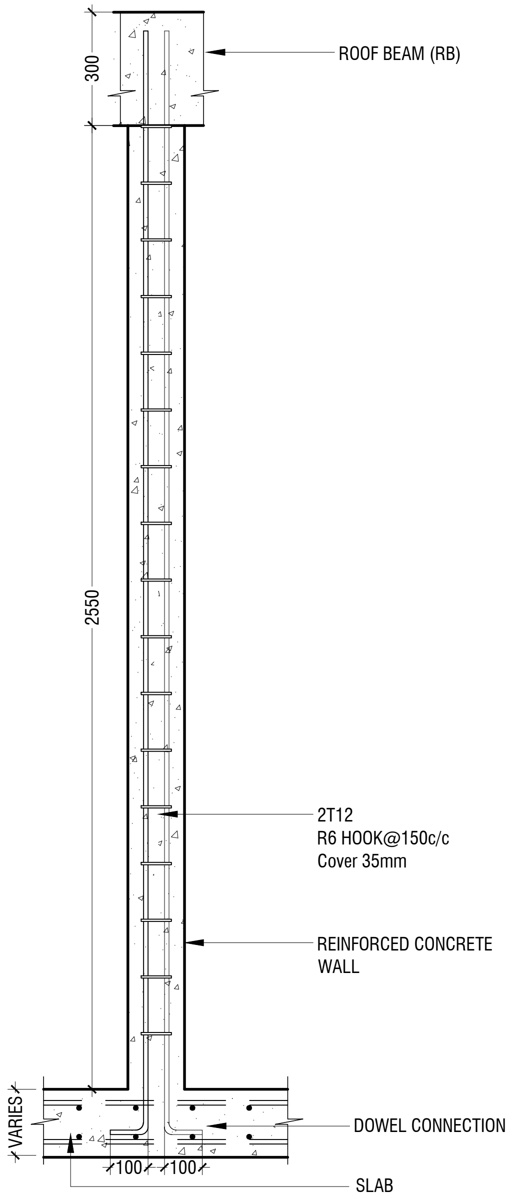
300
ROOF BEAM (RB)
2550
2T12
R6 HOOK@150c/c
Cover 35mm
REINFORCED CONCRETE
WALL
VARIES
DOWEL CONNECTION
100
100
SLAB

SECTION C-C

SCALE 1:20

0 0.1 0.2 0.4 0.6 0.8 1

NOTE:-
FLOOR TO FLOOR HEIGHT VARIES AND WILL BE SUBJECTED TO CHANGES

DETAIL - 5
RC FIN DETAILS (CORRIDOR)

SCALE 1:20

0 0.1 0.2 0.4 0.6 0.8 1

M.Mulaku School (3 story)
Client: Ministry of Education

Project Number: RI/2020/006
Date: June 2021
Architect : Mariyam Irasha Shareef
Engineer : Mohamed Muththalib Waleed
Drawn by : Mariyam Leevan Jaleel
Services : Aishath Ahmed
Interior : -

Rev no	Date
--	----------
--	----------
--	----------
--	----------

RIYAN PRIVATE LIMITED

t : +9603315049 **f :** +9603310776
e : info@riyan.com.mv
w : www.riyan.com.mv
3rd floor, H. Azum, Ameeneemagu, Male'

Title: RC Fins Detail
(Corridor)

The contents of these drawings remain as a property of Riyan Private Limited. Any use other that those expressly stated is a violation of this copyright

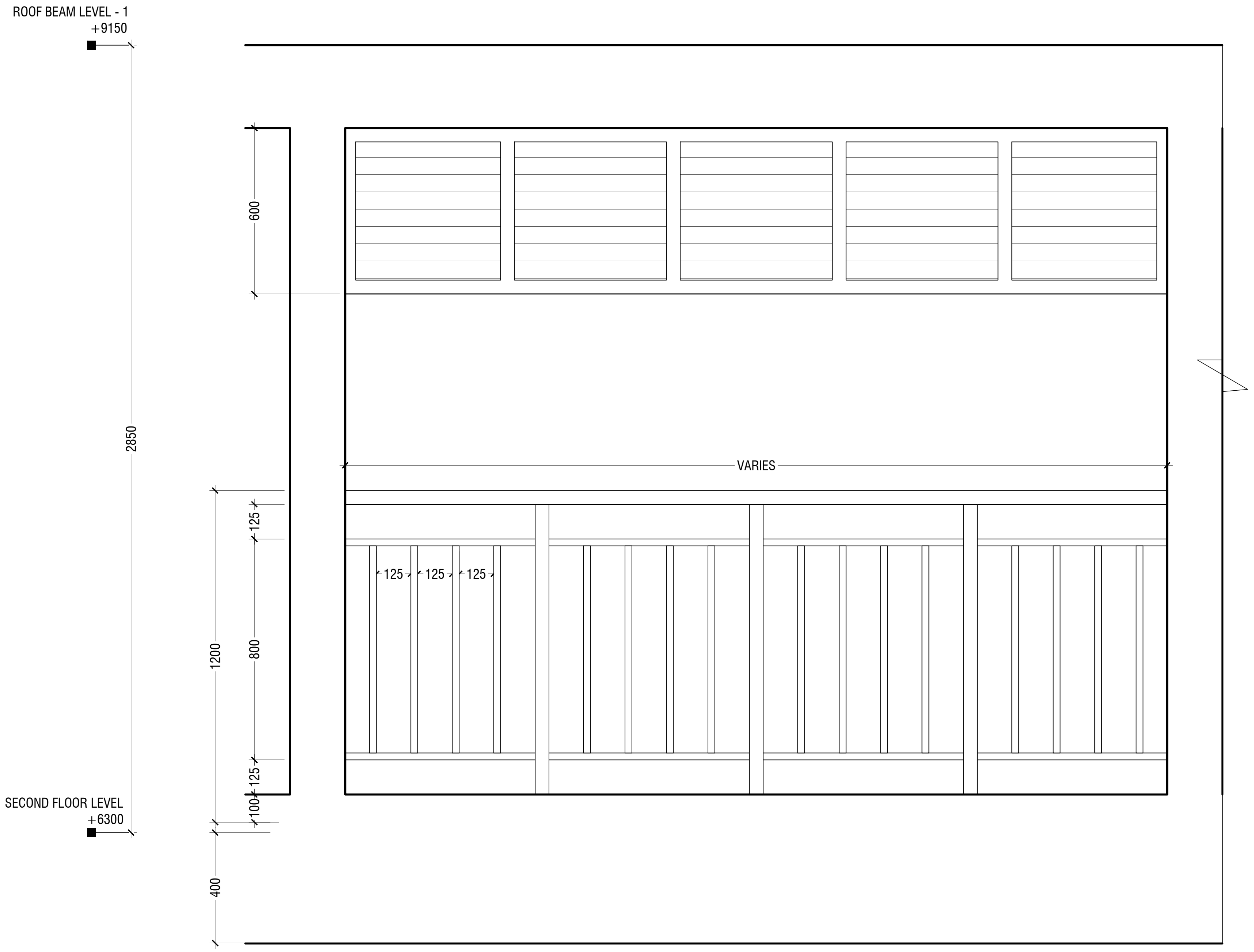
ROOF BEAM LEVEL - 1
+9150
SECOND FLOOR LEVEL
+6300
2850
600
1200
125
800
125
100
400
VARIES
125
125
125

ELEVATION

SCALE 1:20

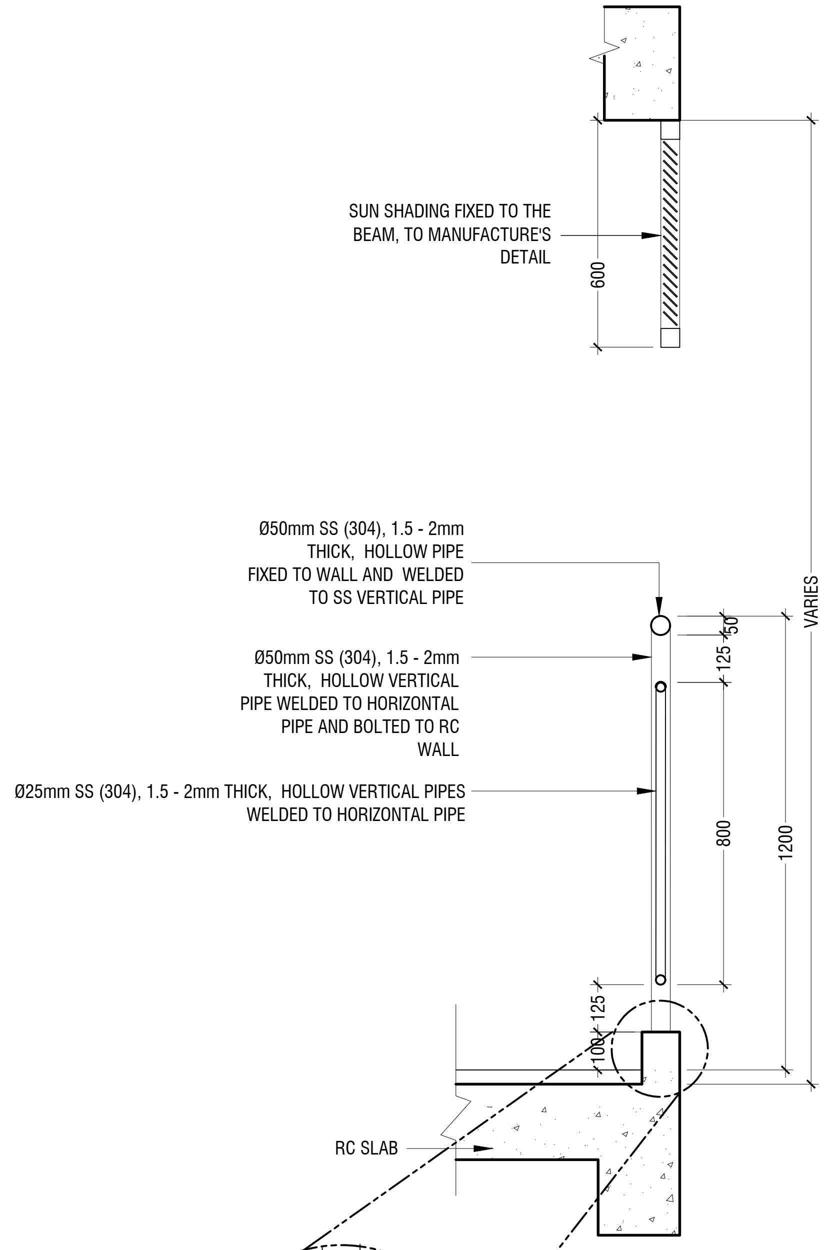
SUN SHADING FIXED TO THE BEAM, TO MANUFACTURE'S DETAIL
600
Ø50mm SS (304), 1.5 - 2mm THICK, HOLLOW PIPE FIXED TO WALL AND WELDED TO SS VERTICAL PIPE
Ø50mm SS (304), 1.5 - 2mm THICK, HOLLOW VERTICAL PIPE WELDED TO HORIZONTAL PIPE AND BOLTED TO RC WALL
Ø25mm SS (304), 1.5 - 2mm THICK, HOLLOW VERTICAL PIPES WELDED TO HORIZONTAL PIPE
50
125
800
1200
VARIES
125
100
RC SLAB

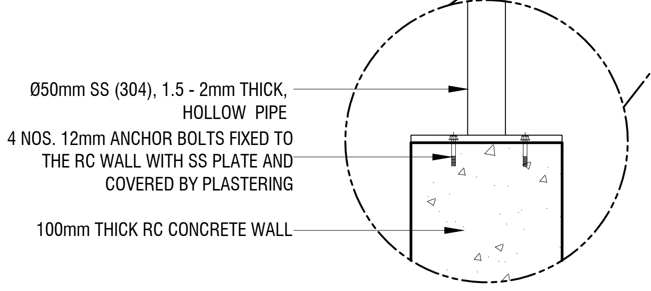
Ø50mm SS (304), 1.5 - 2mm THICK, HOLLOW PIPE
4 NOS. 12mm ANCHOR BOLTS FIXED TO THE RC WALL WITH SS PLATE AND COVERED BY PLASTERING
100mm THICK RC CONCRETE WALL

SECTION

SCALE 1:20

NOTE:-
FLOOR TO FLOOR HEIGHT VARIES AND WILL BE SUBJECTED TO CHANGES

DETAIL - 5
RAILING DETAILS

SCALE 1:20

0 0.1 0.2 0.4 0.6 0.8 1

M.Mulaku School (3 story)
Client: Ministry of Education

Project Number: RI/2020/006
Date: June 2021
Architect : Mariyam Irasha Shareef
Engineer : Mohamed Muththalib Waleed
Drawn by : Mariyam Leevan Jaleel
Services : Aishath Ahmed
Interior : -

Rev no	Date
--	----------------
--	----------------
--	----------------
--	----------------

RIYAN PRIVATE LIMITED

t : +9603315049 f : +9603310776
e : info@riyan.com.mv
w : www.riyan.com.mv
3rd floor, H. Azum, Ameeneemagu, Male'

Title: Railing Detail

The contents of these drawings remain as a property of Riyan Private Limited. Any use other that those expressly stated is a violation of this copyright

THE MAIN LOGO TO BE FIXED AS PER THE MANUFACTURES DETAIL

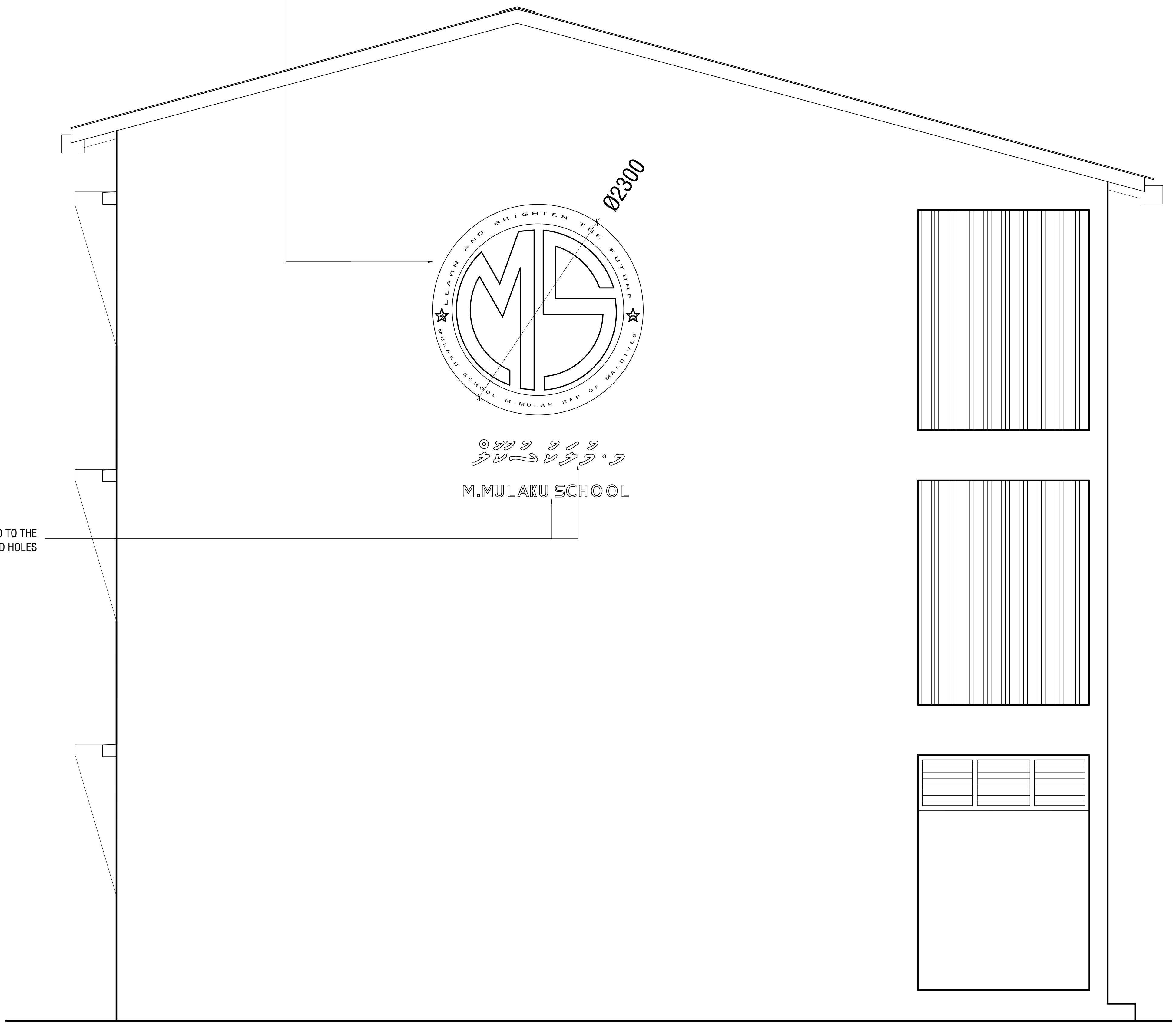
Ø2300
LEARN AND BRIGHTEN THE FUTURE
MULAKU SCHOOL M.MULAH REP OF MALDIVES
M.MULAKU SCHOOL

3D LETTERINGS TO BE STUD FIXED / ATTACHED TO THE WALL BY PUSHING OR GLUEING INTO PRE-DRILLED HOLES

NOTE: IN SELECTING COLOR SHADES, REFER TO THE OFFICIAL COLOR THEME OF MULAKU SCHOOL

REFER TO THE LOGO OF MULAKU SCHOOL FOR ACCURACY

DETAIL - 7
FACADE DETAIL

SCALE 1:50

0 0.1 0.2 0.4 0.6 0.8 1

M.Mulaku School (3 story)
Client: Ministry of Education

Project Number: RI/2020/006
Date: June 2021
Architect : Mariyam Irasha Shareef
Engineer : Mohamed Muththalib Waleed
Drawn by : Mariyam Leevan Jaleel
Services : Aishath Ahmed
Interior : -

Rev no	Date
--	----------------
--	----------------
--	----------------
--	----------------

RIYAN PRIVATE LIMITED

t : +9603315049 f : +9603310776
e : info@riyan.com.mv
w : www.riyan.com.mv
3rd floor, H. Azum, Ameeneemagu, Male'

Title: RC Wall details

The contents of these drawings remain as a property of Riyan Private Limited. Any use other that those expressly stated is a violation of this copyright

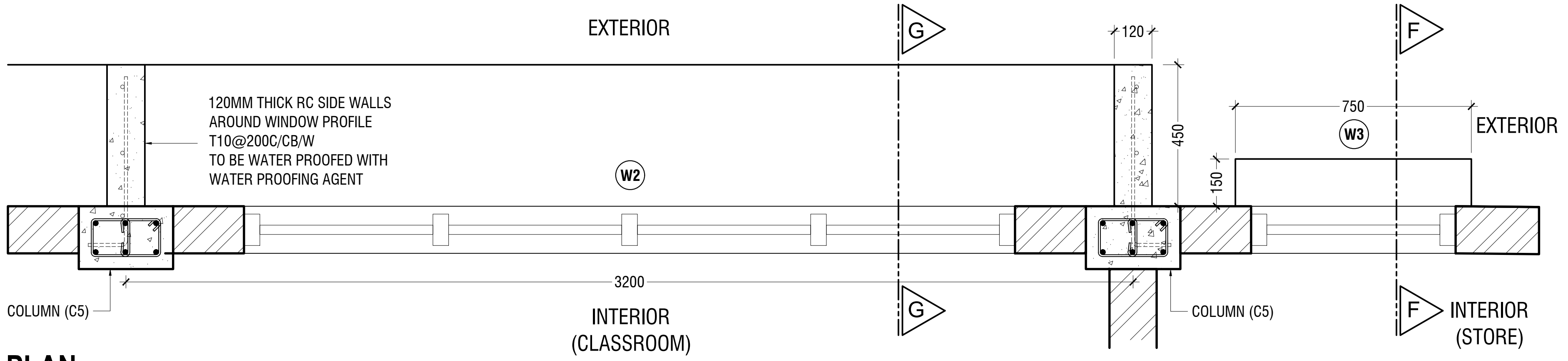
EXTERIOR
G
120
F
120MM THICK RC SIDE WALLS
AROUND WINDOW PROFILE
T10@200C/CB/W
TO BE WATER PROOFED WITH
WATER PROOFING AGENT
W2
450
750
W3
EXTERIOR
150
3200
COLUMN (C5)
G
COLUMN (C5)
F
INTERIOR
(STORE)
INTERIOR
(CLASSROOM)

PLAN

SCALE 1:20

0 0.1 0.2 0.4 0.6 0.8 1

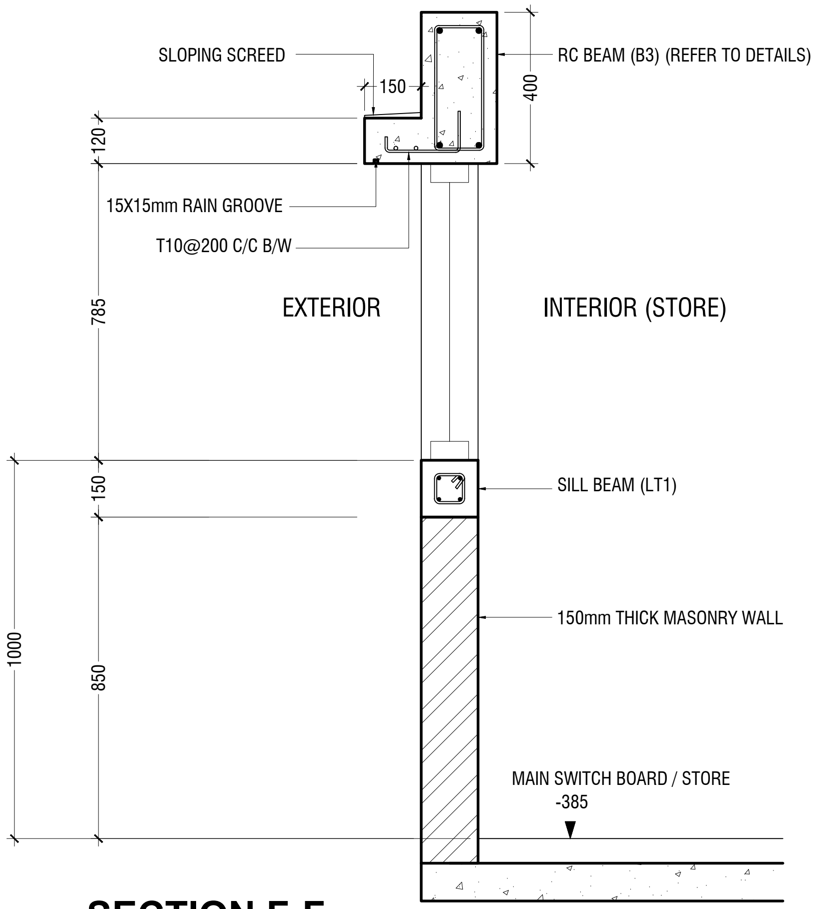
SLOPING SCREED
150
RC BEAM (B3) (REFER TO DETAILS)
400
120
15X15mm RAIN GROOVE
T10@200 C/C B/W
785
EXTERIOR
INTERIOR (STORE)
150
SILL BEAM (LT1)
1000
850
150mm THICK MASONRY WALL
MAIN SWITCH BOARD / STORE
-385

SECTION F-F

SCALE 1:20

0 0.1 0.2 0.4 0.6 0.8 1

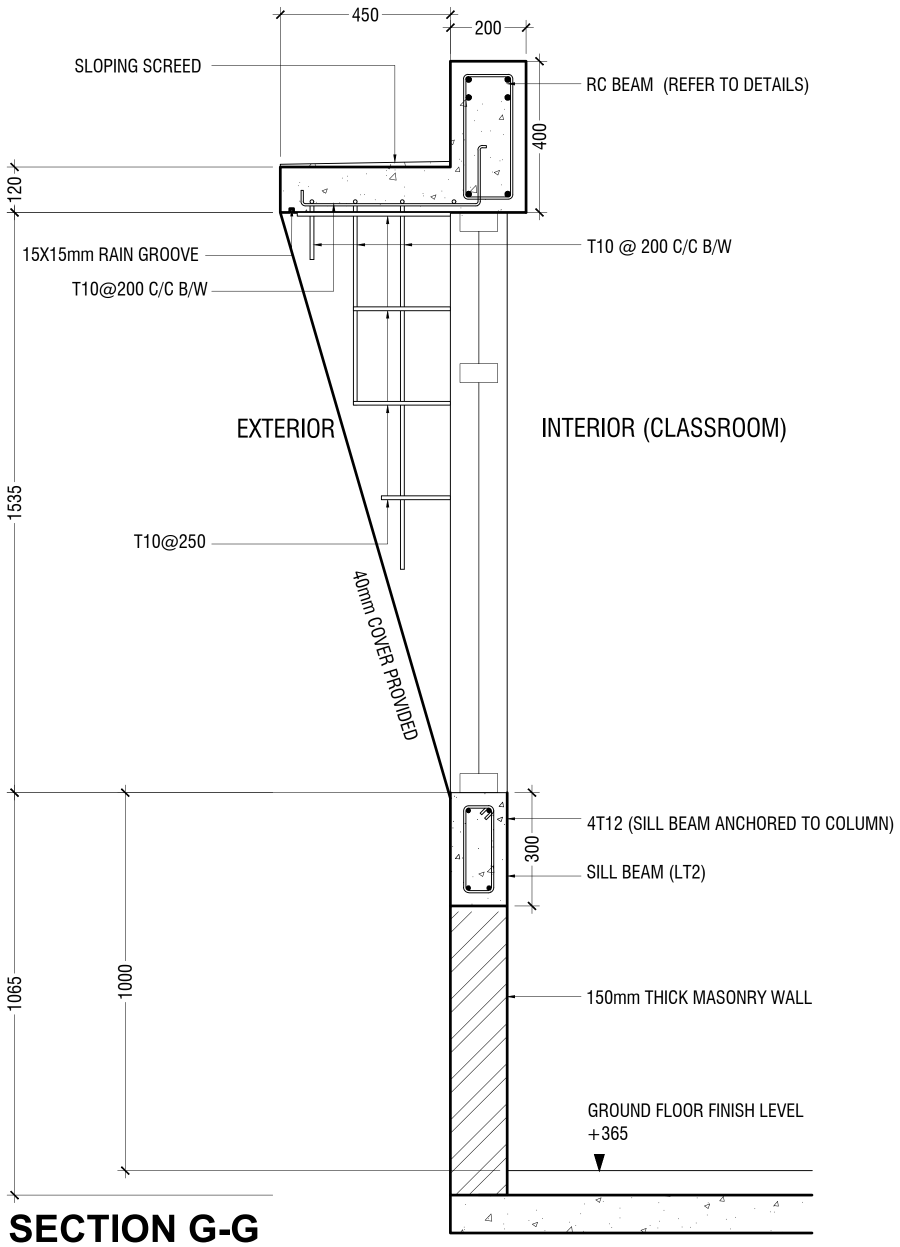
450
200
SLOPING SCREED
RC BEAM (REFER TO DETAILS)
400
120
15X15mm RAIN GROOVE
T10 @ 200 C/C B/W
T10@200 C/C B/W
EXTERIOR
INTERIOR (CLASSROOM)
1535
T10@250
40mm COVER PROVIDED
4T12 (SILL BEAM ANCHORED TO COLUMN)
300
SILL BEAM (LT2)
1065
1000
150mm THICK MASONRY WALL
GROUND FLOOR FINISH LEVEL
+365

SECTION G-G

SCALE 1:20

0 0.1 0.2 0.4 0.6 0.8 1

*** NOTE: GROUND FLOOR**

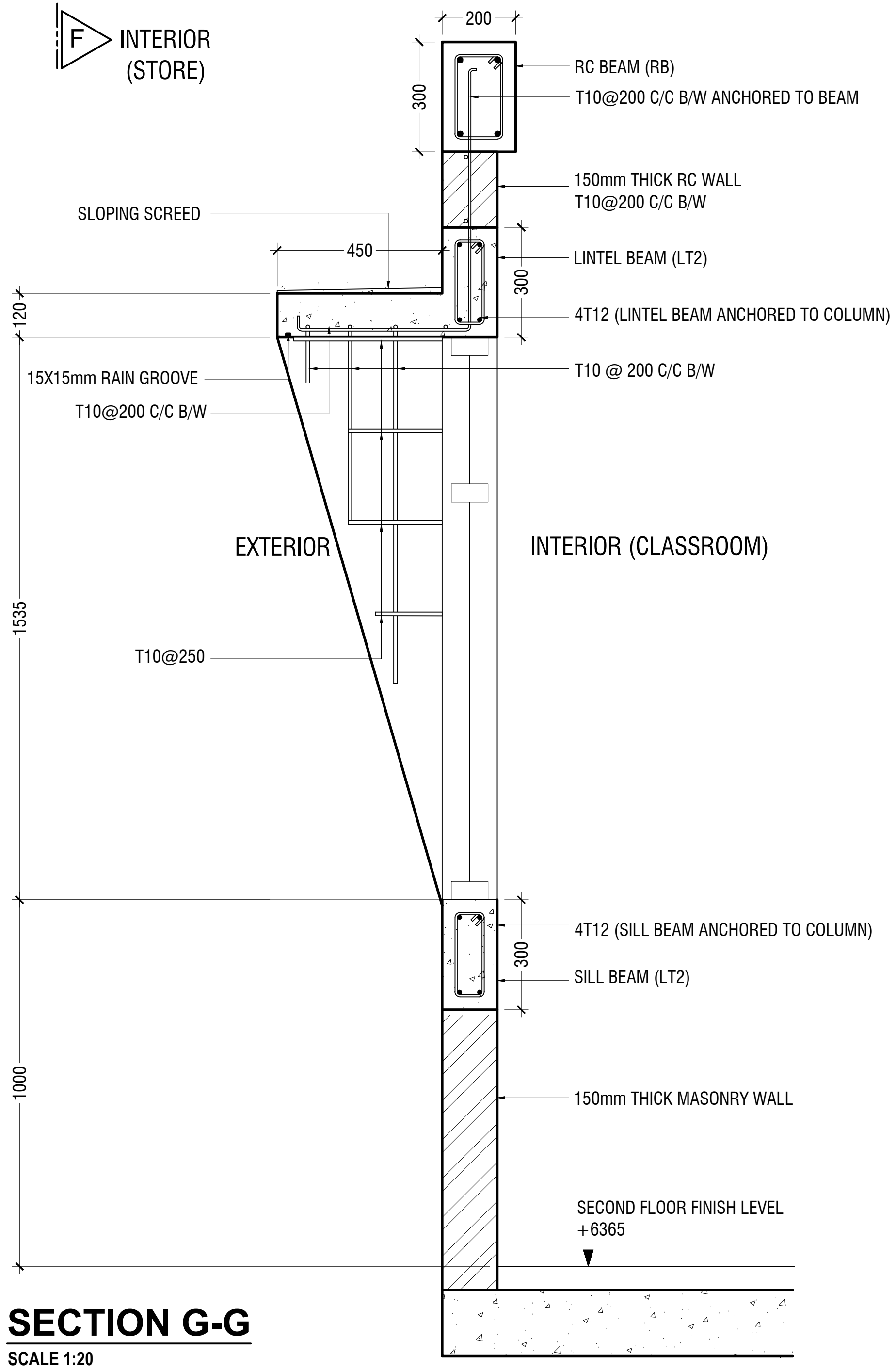
200
300
RC BEAM (RB)
T10@200 C/C B/W ANCHORED TO BEAM
150mm THICK RC WALL
T10@200 C/C B/W
SLOPING SCREED
450
LINTEL BEAM (LT2)
300
120
4T12 (LINTEL BEAM ANCHORED TO COLUMN)
15X15mm RAIN GROOVE
T10 @ 200 C/C B/W
T10@200 C/C B/W
EXTERIOR
INTERIOR (CLASSROOM)
1535
T10@250
4T12 (SILL BEAM ANCHORED TO COLUMN)
300
SILL BEAM (LT2)
1000
150mm THICK MASONRY WALL
SECOND FLOOR FINISH LEVEL
+6365

SECTION G-G

SCALE 1:20

0 0.1 0.2 0.4 0.6 0.8 1

*** NOTE: SECOND FLOOR**

DETAIL - 6
RC WALL DETAILS

SCALE 1:20

0 0.1 0.2 0.4 0.6 0.8 1

M.Mulaku School (3 story)
Client: Ministry of Education

Project Number: RI/2020/006
Date: June 2021
Architect : Mariyam Irasha Shareef
Engineer : Mohamed Muththalib Waleed
Drawn by : Mariyam Leevan Jaleel
Services : Aishath Ahmed
Interior : -

Rev no	Date
--	----------------
--	----------------
--	----------------
--	----------------

RIYAN PRIVATE LIMITED

t : +9603315049 f : +9603310776
e : info@riyan.com.mv
w : www.riyan.com.mv
3rd floor, H. Azum, Ameeneemagu, Male'

Title: Name board details

The contents of these drawings remain as a property of Riyan Private Limited. Any use other that those expressly stated is a violation of this copyright

GENERAL NOTES

THE GENERAL NOTES SHALL BE READ IN CONJUNCTION WITH THE CONTRACT SPECIFICATIONS AND DRAWINGS.
REGARDLESS OF WHETHER OR NOT SHOWN IN DRAWINGS OR OTHER TENDER DOCUMENTS, THE STANDARD PROVISIONS SPECIFIED HEREUNDER FOR COMPLIANCE BY THE CONTRACTOR SHALL APPLY TO ALL RELEVANT PORTIONS OF THE STRUCTURAL WORKS AND SHALL FORM PART OF THIS CONTRACT.

1.0 VERIFICATION OF DIMENSIONS AND LEVELS

- THE CONTRACTOR SHALL VERIFY ALL DIMENSIONS AND LEVELS ON SITE, AND RESOLVE ALL DISCREPANCIES WITH THE ARCHITECT OR ENGINEER PRIOR TO COMMENCEMENT OF WORK.
- DRAWING INDICATES GENERAL & TYPICAL DETAILS OF CONSTRUCTION. WHERE CONDITIONS ARE OF SIMILAR CHARACTER TO DETAILS SHOWN AND ALTHOUGH NOT SPECIFICALLY INDICATED, SIMILAR DETAILS OF CONSTRUCTION SHALL BE USED SUBJECTED TO REVIEW BY THE ENGINEER.
- PRIOR TO COMMENCEMENT OF WORKS, THE CONTRACTOR SHALL VERIFY ALL DIMENSIONS AND LEVELS IN THE CONTRACT DRAWINGS.
- DISCREPANCIES IN DRAWINGS ARISING FROM SUCH VERIFICATION WORKS SHALL BE BROUGHT TO THE ATTENTION OF THE ARCHITECT/ENGINEER.

2.0 SHOP DRAWINGS

- THE CONTRACTOR SHALL BE SOLELY RESPONSIBLE FOR ENSURING TOTAL COORDINATION OF ALL WORKS AND SHALL TAKE SITE MEASUREMENTS PRIOR TO THE PREPARATION OF ANY SHOP DRAWINGS OR BEFORE COMMENCING FABRICATION.
- THE CONTRACTOR SHALL SUBMIT SHOP DRAWINGS FOR ALL SPECIALIST TRADES, SUCH AS PRESTRESSING, CURTAIN WALLING, ETC. FOR REVIEWS AND COMMENTS BY THE ARCHITECT/ENGINEER PRIOR TO COMMENCEMENT OF WORK. SUCH SHOP DRAWINGS SUBMITTED SHALL INCORPORATE ALL NECESSARY CONNECTION DETAILS TO THE STRUCTURAL MEMBERS SUCH AS CAST-IN INSERTS, EMBEDDED PLATES, ETC.

3.0 INCORPORATION OF M&E REQUIREMENTS IN THE STRUCTURE

- THE CONTRACTOR SHALL BE SOLELY RESPONSIBLE FOR ENSURING TOTAL COORDINATION OF STRUCTURAL, M & E PENETRATION DRAWINGS OF SERVICES AND SUBMIT SUCH SHOP DRAWINGS TO THE ARCHITECT/ENGINEER FOR REVIEWS AND APPROVAL PRIOR TO COMMENCEMENT OF WORK.
- THESE SHOP DRAWINGS SHALL INCORPORATE ALL MECHANICAL, ELECTRICAL AND SANITARY WORKS TO BE EMBEDDED IN CONCRETE AND ALL OPENINGS FOR ALL PIPE OR DUCT WORKS, BASED ON THE REQUIREMENTS OF M & E DRAWINGS IN HIS POSSESSION.
- HE SHALL CHECK AND RESOLVE ALL DISCREPANCIES WITH THE RESPECTIVE ENGINEER PRIOR TO PLACEMENT OF CONCRETE.

4.0 LEAN CONCRETE FOR SUSPENDED STRUCTURES

- UNLESS OTHERWISE STATED, 50 MM THICK LEAN CONCRETE WITH A MINIMUM 28-DAY CUBE STRENGTH OF 15N/MM2 SHALL BE PROVIDED ON ALL SOIL SURFACES FORMING THE UNDERSIDE OF STRUCTURAL CONCRETE MEMBERS.

5.0 STRUCTURAL ELEMENTS ON GRADE

- UNLESS OTHERWISE STATED, A SINGLE LAYER OF 0.25 MM(HEAVY DUTY) POLYTHENE SHEET, OR EQUIVALENT THERMOPLASTIC MATERIAL, LAID OVER A COMPACTED 60 MM THICK LAYER OF HARD CORE BLINDED WITH SAND TO PREVENT GROUT LOSS FROM SEEPAGE INTO THE GROUND SHALL BE PROVIDED ON ALL SOIL SURFACES FORMING THE UNDERSIDE OF THE NON-SUSPENDED SLABS.

6.0 SUBGRADE UNDER STRUCTURAL ELEMENTS

- WHERE THE CONTRACTOR REQUIRES REMOVAL AND SUBSEQUENT BACKFILL OF SUBGRADE PRIOR TO CASTING OF PILECAP/WALL/BEAM/SLAB, HE SHALL ENSURE THAT THE BACKFILL IS OF APPROVED MATERIAL AND THAT THE BACKFILL SHALL BE REASONABLY COMPACTED TO ENSURE THAT THE COMPACTED SOIL IS ABLE TO WITHSTAND THE WEIGHT OF THE WET CONCRETE. THE CONTRACTOR SHALL EXERCISE PROPER SKILL AND CARE TO AVOID DAMAGE TO ADJACENT INSTALLED STRUCTURES ARISING FROM HIS CONSTRUCTION SEQUENCE.

7.0 WATERPROOFING FOR STRUCTURES

- THE CONTRACTOR SHALL SUBMIT SHOP DRAWINGS AND METHOD STATEMENTS FOR THE ENGINEER'S APPROVAL PRIOR TO COMMENCEMENT OF WORK. REQUIRED SHOP DRAWING DETAILS INCLUDE BUT ARE NOT LIMITED TO TREATMENT OF FLASHINGS, WATERSTOP AT CONSTRUCTION JOINTS, WALL AND SLAB PENETRATIONS.
- ALL PENETRATIONS THROUGH STRUCTURAL ELEMENTS SHALL BE CAST-IN, SLEEVED AND PROVIDED WITH APPROVED PUDDLE FLANGE DETAIL. IF FOR ANY REASON THE CONTRACTOR IS UNABLE TO LAY WATERSTOP AT CONSTRUCTION JOINTS AS INDICATED IN THE DRAWINGS, HE SHALL AT HIS OWN EXPENSES PROVIDE ADEQUATE GROUT TUBES FOR WATERPROOF PRESSURE GROUTING TO ENSURE WATERTIGHTNESS OF THE JOINT.
- ALL GROUT TUBES SHALL BE MARKED AND PROTECTED FROM BLOCKAGE.
- BACKFILLING OPERATIONS AGAINST VERTICAL SURFACE SHALL BE CARRIED OUT AS SOON AS THE WATERPROOFING BARRIER IS INSTALLED TO THE SATISFACTION OF THE ENGINEER.

8.0 CASTING LAYERS

- INCLINED CASTING LAYERS AND INCLINED CONSTRUCTION JOINTS SHALL BE AVOIDED.
- HORIZONTAL CASTING LAYERS SHALL NOT IN GENERAL EXCEED 0.6 M THICKNESS UNLESS OTHERWISE APPROVED BY THE ENGINEER.

9.0 FOUNDATIONS

- ALL FOUNDATIONS HAS BEEN DESIGNED FOR SAFE GROUND PRESSURE OF 150 KN/M.
- ALL BACKFILL SHOULD BE DONE WITH MATERIALS APPROVED BY THE CONSULTANT AND SOURCE. ALL BACKFILL SHOULD BE STRUCTURAL FILL, COMPACTED IN LAYERS AS SPECIFIED.
- WEAK POCKETS FOUND BELOW THE ASSUMED FOUNDATION LEVELS SHALL BE REMOVED AND REPLACED BY PLAIN CONCRETE.
- IN CASE OF EXCAVATIONS BELOW THE ASSUMED LEVEL OF THE FOUNDATION, THE SOIL SHALL BE REPLACED BY PLAIN CONCRETE.
- IN CASE GROUND WATER IS PRESENT ABOVE FOUNDATION LEVEL, THE CONTRACTOR SHALL BE RESPONSIBLE FOR DEWATERING THE BELOW LEVEL OF FOUNDATIONS.
- THE CONTRACTOR SHALL MAINTAIN DRY WORKING CONDITIONS THROUGH OUT THE CONSTRUCTION PERIOD. RESTORING WATER TABLE CAN BE DONE AFTER BACKFILLING AND COMPACTION UP TO THE SLAB ON GRADE LEVEL, OR AS DIRECTED BY THE ENGINEER.
- NO BACK FILLING SHALL BE PLACED AGAINST WALLS RETAINING EARTH, UNLESS THE WALLS ACHIEVE SUFFICIENT STRENGTH TO PREVENT MOVEMENT OR STRUCTURAL DAMAGE.

10.0 CONSTRUCTION LOAD AND SHORING

- CONSTRUCTION LIVE LOAD IMPOSED ON ANY SINGLE FLOOR SHALL NOT EXCEED 1.5 KN/M2. UNLESS OTHERWISE APPROVED BY THE ENGINEER, DEAD LOAD OF THE TOP CONSTRUCTION FLOOR SHALL BE SUPPORTED BY TWO COMPLETED FLOORS DIRECTLY BELOW IT.
- PROPS TO BEAMS AND SLABS AT ANY FLOORS SHALL NOT BE REMOVED UNTIL THE TWO IMMEDIATE FLOORS ABOVE THAT LEVEL ARE CAPABLE OF SUPPORTING THEMSELVES AS WELL AS ANY LOADS IMPOSED DURING CONSTRUCTION. CONSIDERATIONS GOVERNING REMOVAL OF PROPS INCLUDE BUT ARE NOT LIMITED TO THE ATTAINMENT OF 28-DAY STRENGTH FOR THE CONCRETE, DESIGN LOAD CAPACITY OF THE FLOOR UNDER REVIEW AND THE COMPLETION OF PRESTRESSING AND GROUTING OPERATIONS IN THE CASE OF A PRESTRESSED STRUCTURAL FLOOR SYSTEM.
- PROPS SHALL BE LEFT IN PLACE FOR SUPPORTING THE CONSTRUCTION LOADS APPROVED BY THE ENGINEER.
- NO ALLOWANCE HAS BEEN MADE IN THE DESIGN OF THE PERIMETER BEAMS/WALLS FOR THE SUPPORT OF TEMPORARY SCAFFOLDINGS.
- THE CONTRACTER SHALL ENGAGE HIS OWN PROFESSIONAL ENGINEER TO DESIGN AND STRENGTHEN THE BEAMS/WALLS.
- THE CONTRACTER SHALL ENGAGE HIS OWN PROFESSIONAL ENGINEER CHECK THE ADEQUACY OF SHORING DETAIL PROVIDED PROCEEDING THE WORK, AS SHORING WAS DESIGNED, CONSIDERING THE STATUS OF THE BUILDING AT THE TIME OF DESIGN.

11.0 CONCRETE COVER

- MINIMUM COVER TO OUTERMOST REINFORCEMENT INCLUDING LINKS SHALL BE AS FOLLOWS.

STRUCTURAL ELEMENT	COVER (mm)
RAFT BEAM & SLAB (EARTH FACE)	60
RAFT BEAM & SLAB (INTERNAL FACE)	60
COLUMN	40
BEAM	35
BEAM (EXTERNAL FACE)	40
SLAB	30
INTERNAL WALL	30
EXTERNAL WALL	40

- NOTE: EARTH FACE COVER OF BEAMS, COLUMNS & WALLS SHOULD BE 50mm

12.0 MATERIAL STRENGTHS

12.1 CONCRETE

- UNLESS OTHERWISE STATED, ORDINARY PORTLAND CEMENT CONFORMING TO BS 12, TO BE USED FOR ALL THE RC STRUCTURAL ELEMENTS.
- THE MINIMUM 28-DAY COMPRESSIVE CUBE STRENGTH OF CONCRETE FOR SPECIFIED STRUCTURAL ELEMENTS SHALL BE AS FOLLOWS UNLESS OTHERWISE STATED:

MAIN BUILDING	
LEAN CONCRETE	15 N/mm2
MASS CONCRETE	30 N/mm2
COLUMN, BEAM AND SLAB	30 N/mm2
EXTERNAL WORK	
PAVEMENTS	30 N/mm2
ALL OTHERS (CULVERT, DRAINS, MANHOLE, ETC)	30 N/mm2
FOUNDATION	
PILECAP, FOOTING, RAFT TIE-BEAM, CAPPING BEAM	30 N/mm2

- CEMENT SHALL BE ORDINARY PORTLAND CEMENT TO BS 12.

M.Mulaku School (3 story)
Client: Ministry of Education

Project Number: RI/2020/006
Date: June 2021
Architect : Mariyam Irasha Shareef
Engineer : Mohamed Muththalib Waleed
Drawn by : Mariyam Leevan Jaleel
Services : Aishath Ahmed
Interior : -

Rev no	Date
--	----------
--	----------
--	----------
--	----------

RIYAN PRIVATE LIMITED
t : +9603315049 f : +9603310776
e : info@riyan.com.mv
w : www.riyan.com.mv
3rd floor, H. Azum, Ameeneemagu, Male'

Title: General Notes

The contents of these drawings remain as a property of Riyan Private Limited. Any use other that those expressly stated is a violation of this copyright

12.2 REINFORCEMENT

- UNLESS OTHERWISE STATED, BAR SIZE 10MM DIAMETER OR LARGER SHALL BE HIGH TENSILE TYPE II DEFORMED BARS. THE MINIMUM YIELD STRENGTH OF STEEL BAR REINFORCEMENT SHALL BE AS FOLLOWS:

MILD STEEL PLAIN BAR	250 N/mm2
HIGH TENSILE TYPE II DEFORMED BAR	415 N/mm2

12.25 REINFORCEMENT ANCHORAGE OR LAPPING IS AS FOLLOWS U.N.O.

	BAR GRADE 415
TENSION	45Ø
COMPRESSION	45Ø

Ø IS DIAMETER OF THE SMALLER SIZED LAPPED BAR.

- NO SPLICE SHALL BE MADE AT POINT OF MAXIMUM STRESS,EG IN BEAMS AND SLABS, THERE SHALL BE NO SPLICING OF TOP BARS OVER SUPPORTS NOR BOTTOM BARS AT MID-SPANS. SPLICES SHALL BE STAGGERED WHEREVER POSSIBLE. LAP LENGTH FOR UNEQUAL SIZE BARS (OR WIRES IN FABRIC) MAY BE BASED UPON THE SMALLER BAR. FOR BUNDLED BARS, THE EQUIVALENT DIAMETER SHALL BE USED. CRANKING OF BARS SHALL NOT EXCEED A SLOPE OF 1:10.
- FOR LAP LENGTH, WHERE SYMBOLS ARE NOT INDICATED, THE TENSION LAP LENGTH SHALL BE FOLLOWED.

13.0 STIRRUPS, LINKS AND TIES

- ALL STIRRUPS, LINKS AND TIES IN BEAMS, COLUMNS AND WALLS RESPECTIVELY SHALL TERMINATE NOT MORE THAN 75mm FROM THE FACE OF ANY ADJACENT STRUCTURAL MEMBERS.

14.0 SLAB DISTRIBUTION BARS

- REGARDLESS OF WHETHER OR NOT SHOWN ON PLAN, ALL DISTRIBUTION BARS FOR SLAB SHALL COMPRISE TYPICALLY ONE OF THE FOLLOWING COMBINATIONS, UNLESS OTHERWISE STATED IN THE RELEVANT DRAWINGS :

SLAB THICKNESS (mm)	MIN. DISTRIBUTION BAR
250 OR LESS	T10-300
GREATER THAN 250 BUT LESS THAN OR EQUAL TO 300	T10-200
GREATER THAN 300 BUT LESS THAN OR EQUAL TO 400	T10-150

15.0 FLOOR RENDERING

- THICKNESS OF SCREED RENDERING/MASS CONCRETE TOPPING EXCEEDING 60 OR MORE SHALL BE REINFORCED WITH ONE LAYER OF R6.

16.0 SHRINKAGE CRACKS

- THE SURFACE OF CONCRETE SHALL BE ADEQUATELY AND CONTINUOUSLY CURED TO SPECIFICATION TO PREVENT FORMATION OF SHRINKAGE CRACKS.THOUGH SHRINKAGE CRACKS HAVE NO EFFECT ON THE STRENGTH AND INTEGRITY OF THE STRUCTURE,THEY SHOULD BE SEALED BY EPOXY PRESSURE GROUTING. ALL COST INCURRED FOR THE NECESSARY SEALING UP OF SHRINKAGE CRACKS BY EPOXY PRESSURE GROUTING SHALL BE DEEMED TO BE INCLUDED IN THE CONCRETE WORK AS TENDERED.

17.0 STEEL BAR CORROSION PROTECTION

- ALL EXPOSED BARS FOR FUTURE CONSTRUCTION PURPOSES (EXCEEDING 3 MONTHS) MUST BE COATED WITH MASTER EMACO 8100 AP OR APPROVED EQUIVALENT AND PROVIDED WITH ADEQUATE MAINTENANCE.

18.0 SPACER BARS

- ALL SPACER BARS BETWEEN 2 OR MORE LAYERS OF REINFORCEMENT SHALL T25 OR BAR DIAMETER (WHICHEVER IS GREATER) AT ±1-5M C/C.

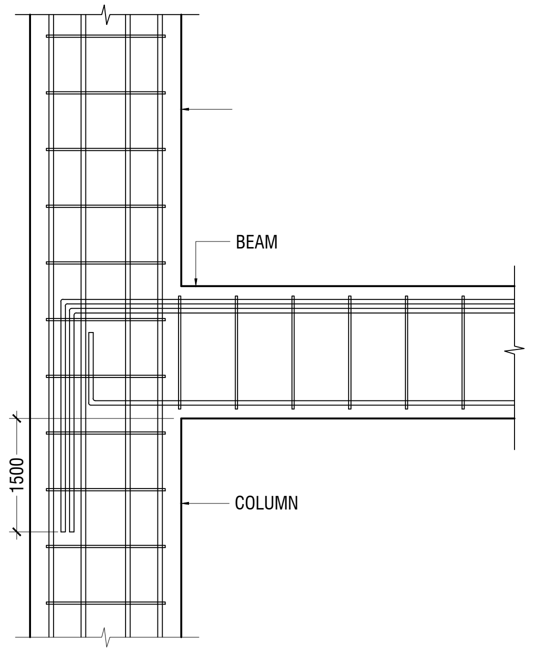

BEAM TO COLUMN CONNECTION

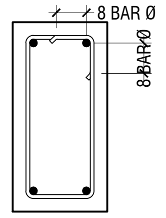

Ø = DIA OF LINK

SHEAR LINKS ANCHORAGE DETAIL

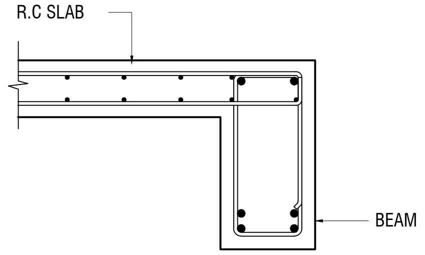

SLAB-BEAM ANCHORAGE DETAIL

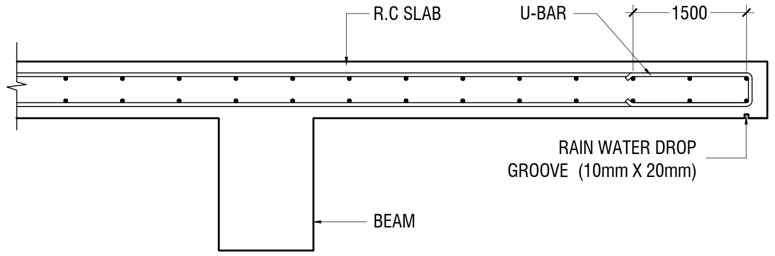

CANTILEVERED SLAB EDGE DETAIL

M.Mulaku School (3 story)
Client: Ministry of Education

Project Number: RI/2020/006
Date: June 2021
Architect : Mariyam Irasha Shareef
Engineer : Mohamed Muththalib Waleed
Drawn by : Mariyam Leevan Jaleel
Services : Aishath Ahmed
Interior : -

Rev no	Date
--	------------
--	------------
--	------------
--	------------

RIYAN PRIVATE LIMITED

t : +9603315049 f : +9603310776
e : info@riyan.com.mv
w : www.riyan.com.mv
3rd floor, H. Azum, Ameeneemagu, Male'

Title: General Notes

The contents of these drawings remain as a property of Riyan Private Limited. Any use other that those expressly stated is a violation of this copyright

19.0 STRUCTURAL TIMBER SPECIFICATION

19.1 THE CONTRACT STRUCTURAL DRAWINGS AND SPECIFICATIONS REPRESENT THE COMPLETED STRUCTURE, AND ARE NOT INTENDED TO INDICATE THE METHOD OR MEANS OF CONSTRUCTION. THE CONTRACTOR SHALL SUPERVISE AND DIRECT THE WORK AND SHALL BE SOLELY RESPONSIBLE FOR ALL CONSTRUCTION MEANS, METHODS, PROCEDURES, TECHNIQUES, SEQUENCES, AND FOR JOB SAFETY.

19.2 THE ENGINEER DOES NOT HAVE CONTROL OR CHARGE OF, AND SHALL NOT BE RESPONSIBLE FOR, CONSTRUCTION MEANS, METHODS, TECHNIQUES, SEQUENCES, OR PROCEDURES, FOR SAFETY PRECAUTIONS AND PROGRAMS IN CONNECTION WITH THE WORK, FOR THE ACTS OR OMISSIONS OF THE CONTRACTOR, SUBCONTRACTOR, OR ANY OTHER PERSONS PERFORMING ANY OF THE WORK, OR FOR THE FAILURE OF ANY OF THEM TO CARRY OUT THE WORK IN ACCORDANCE WITH THE CONTRACT DOCUMENTS.

19.3 ALL CONSTRUCTION IS IN COMPLIANCE WITH THE CONSTRUCTION DOCUMENTS. THE GENERAL CONTRACTOR SHALL BE RESPONSIBLE FOR PERFORMING ALL WORK IN COMPLIANCE WITH THE CONSTRUCTION DOCUMENTS.

19.4 ALL TIMBER FOR STRUCTURAL USE SHALL BE HARDWOOD OR SOFTWOOD OF VISUAL GRADE C/D IN ACCORDANCE WITH BS 5756 WITH THE FOLLOWING MINIMUM GRADE STRESSES:

19.5 CONNECTIONS
PLATES - STAINLESS STEEL GRADE 316 OF STATED THICKNESS
BOLTS - SS GRADE 316

19.6 TIMBER TREATMENT
MOISTURE - PRESSURE IMPREGNATION OF CCA
INSECTS - TERMITE TREATMENT FOR TIMBER IN / NEAR GROUND

20.0 STRUCTURAL STEEL SPECIFICATION

1. SEE 21.0 ON PRIMARY CODES AND SPECIFICATIONS.

2. MATERIALS:

W-SHAPES & WT-SHAPES.................................... ASTM A992
S-SHAPES, M-SHAPES, HP-SHAPES........................... ASTM A36
ST-SHAPES & MT-SHAPES.................................... ASTM A36
C-SHAPES & MC-SHAPES.................................... ASTM A36
ANGLES & PLATES... ASTM A36
HSS SHAPES.. ASTM A500, GRADE B
STEEL PIPE................................. ASTM A53 (TYPE E OR S), GRADE B
HIGH STRENGTH BOLTS..................................... ASTM A325
MACHINE BOLTS... ASTM A307
ANCHOR RODS.................................ASTM F1554, GRADE 55 TYPE S1(UNO)
WELDED HEADED STUDS..................................... ASTM A108
DEFORMED BAR ANCHORS.................................... ASTM A496
WELDING ELECTRODES...................................... AWS D1.1, E70 SERIES

3. NON-SHRINK, NON-METALLIC GROUT WITH A 28 DAY STRENGTH OF 35MPa SHALL BE USED UNDER BASE PLATES AND SHALL CONFORM TO BS EN 12390-3 AND EN 196-1. MASTERFLOW 542 OR EQUIVALENT MAYBE USED.

23.0 POST-INSTALLED ANCHORS

1. POST-INSTALLED ANCHORS SHALL ONLY BE USED WHERE SPECIFIED ON THE DRAWINGS. CONTRACTOR SHALL OBTAIN APPROVAL FROM ENGINEER OF RECORD (EOR) PRIOR TO USING POST-INSTALLED ANCHORS FOR MISSINGS OR MISPLACED ANCHORS.

2. CARE SHALL BE GIVEN TO AVOID CONFLICTS WITH EXISTING REINFORCING WHEN DRILLING HOLES. HOLES SHALL BE DRILLED AND CLEANED PER THE MANUFACTURER'S INSTRUCTIONS. ANCHORS SHALL BE INSTALLED PER THE MANUFACTURER'S INSTALLATION INSTRUCTIONS AT NOT LESS THAN MINIMUM EDGE DISTANCES AND/OR SPACINGS INDICATED IN THE MANUFACTURER'S LITERATURE.

3. SPECIAL INSPECTION SHALL BE PROVIDED FOR ALL ADHESIVE AND MECHANICAL ANCHOR INSTALLATIONS AS REQUIRED BY THE EOR. INDEPENDENT ON-SITE PROOF LOAD TESTING SHALL BE PERFORMED AS REQUIRED BY THE EOR. CONTACT EOR FOR NUMBER OF ANCHORS REQUIRED TO BE TESTED AND REQUIRED PROOF LOAD MAGNITUDE.

M.Mulaku School (3 story)
Client: Ministry of Education

Project Number: RI/2020/006
Date: June 2021
Architect : Mariyam Irasha Shareef
Engineer : Mohamed Muththalib Waleed
Drawn by : Mariyam Leevan Jaleel
Services : Aishath Ahmed
Interior : -

Rev no	Date
--	----------
--	----------
--	----------
--	----------

RIYAN PRIVATE LIMITED

t : +9603315049 **f** : +9603310776
e : info@riyan.com.mv
w : www.riyan.com.mv
3rd floor, H. Azum, Ameeneemagu, Male'

Title: General Notes

The contents of these drawings remain as a property of Riyan Private Limited. Any use other that those expressly stated is a violation of this copyright

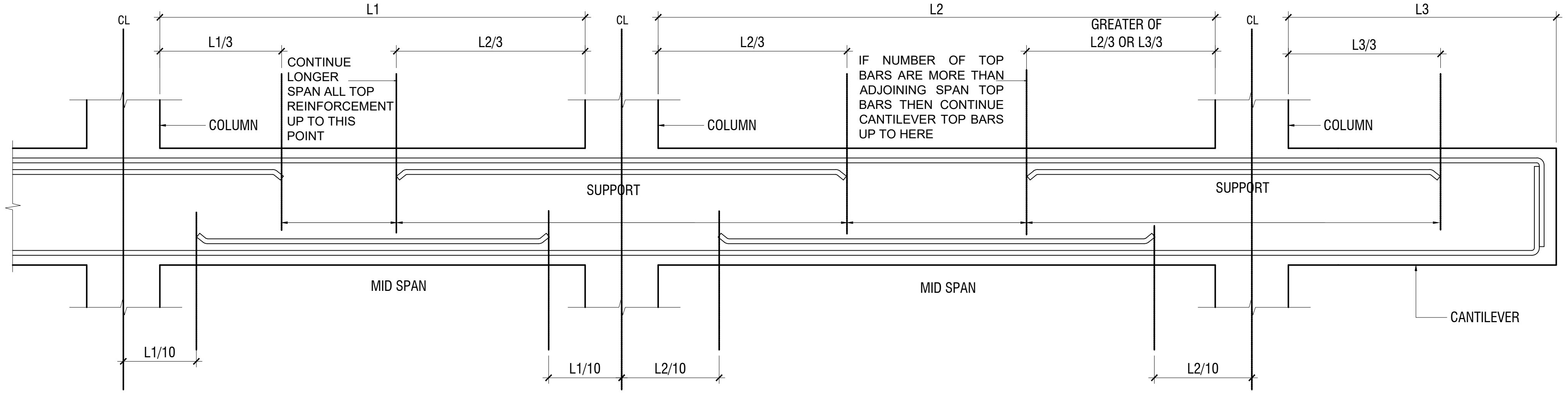
CL
L1
L1/3
L2/3
CONTINUE
LONGER
SPAN ALL TOP
REINFORCEMENT
UP TO THIS
POINT
COLUMN
CL
L2
L2/3
GREATER OF
L2/3 OR L3/3
IF NUMBER OF TOP
BARS ARE MORE THAN
ADJOINING SPAN TOP
BARS THEN CONTINUE
CANTILEVER TOP BARS
UP TO HERE
COLUMN
CL
L3
L3/3
COLUMN
SUPPORT
SUPPORT
MID SPAN
MID SPAN
CANTILEVER
L1/10
L1/10
L2/10
L2/10

L1 = SHORTER SPAN
L2 = LONGER SPAN
L3 = CANTILEVER LENGTH

SIMPLIFIED DETAILING RULES FOR BEAMS (BS8110-1)

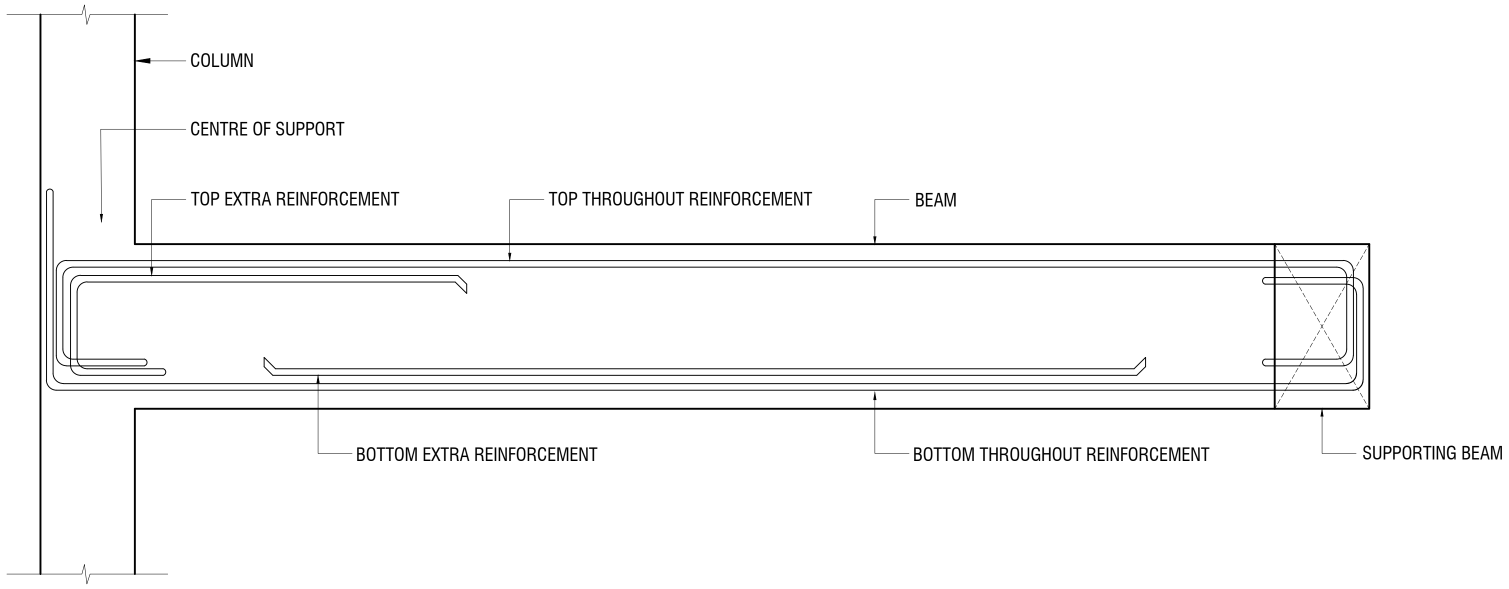
COLUMN
CENTRE OF SUPPORT
TOP EXTRA REINFORCEMENT
TOP THROUGHOUT REINFORCEMENT
BEAM
BOTTOM EXTRA REINFORCEMENT
BOTTOM THROUGHOUT REINFORCEMENT
SUPPORTING BEAM

LONGITUDINAL SECTION OF TYPICAL SLAB BEAM SPANNING BETWEEN A COLUMN AND BEAM
SHOWING END SPAN MID SPAN REINFORCEMENT DETAILS

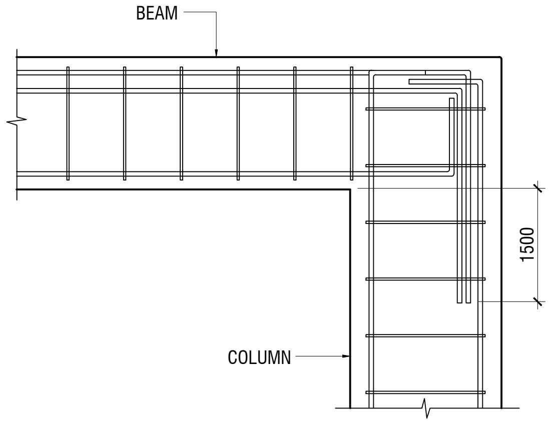
BEAM
1500
COLUMN

END COLUMN TO BEAM CONNECTION

NOTE:
STANDARD DETAILS GIVEN HERE ALSO APPLIES TO FOUNDATION MEMBERS
OTHER DETAILS NOT FOUND HERE SHALL BE REFEREED TO IN RELEVANT BS
CODES OR SHALL BE APPROVED BY CLIENT'S ENGINEER

M.Mulaku School (3 story)
Client: Ministry of Education

Project Number: RI/2020/006
Date: June 2021
Architect : Mariyam Irasha Shareef
Engineer : Mohamed Muththalib Waleed
Drawn by : Mariyam Leevan Jaleel
Services : Aishath Ahmed
Interior : -

Rev no	Date
--	----------
--	----------
--	----------
--	----------

RIYAN PRIVATE LIMITED

t : +9603315049 f : +9603310776
e : info@riyan.com.mv
w : www.riyan.com.mv
3rd floor, H. Azum, Ameeneemagu, Male'

Title: General Notes

The contents of these drawings remain as a property of Riyan Private Limited. Any use other that those expressly stated is a violation of this copyright

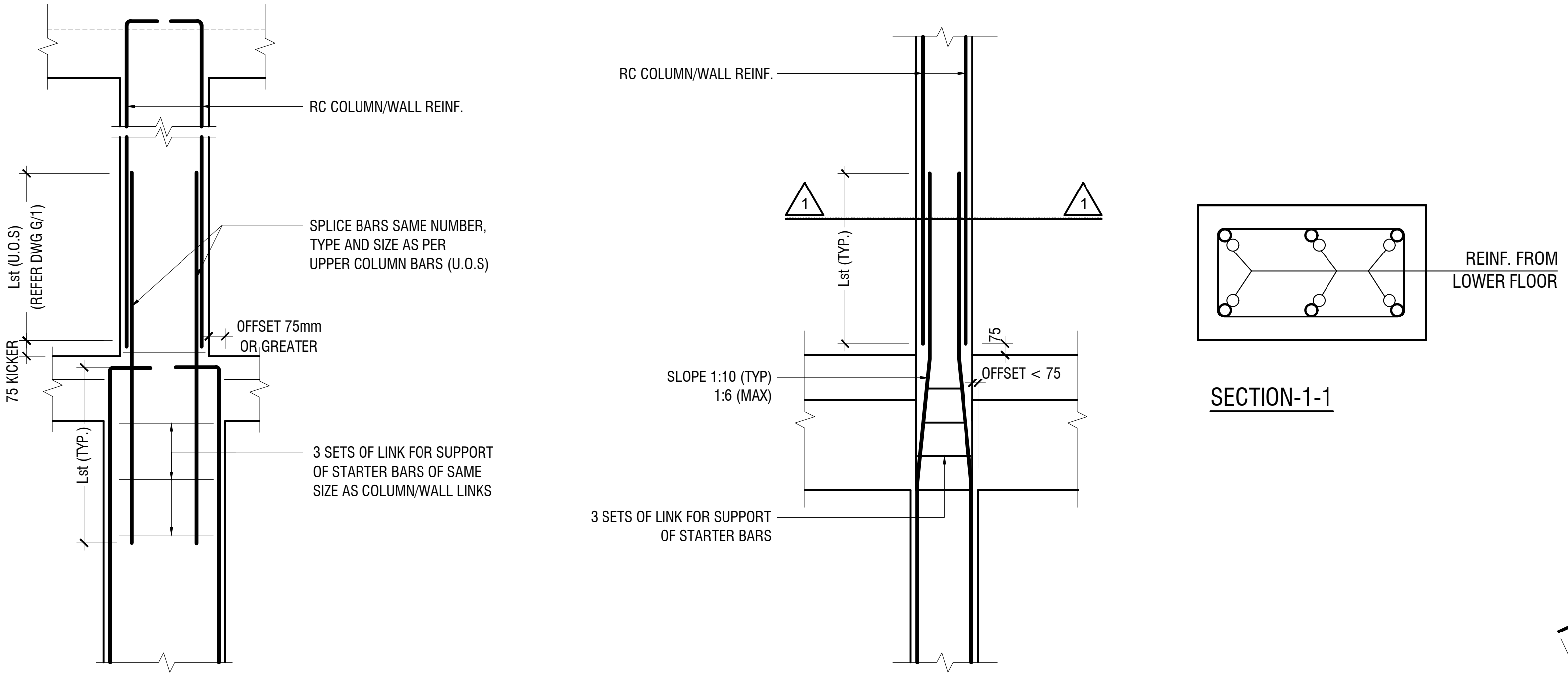
RC COLUMN/WALL REINF.
SPLICE BARS SAME NUMBER, TYPE AND SIZE AS PER UPPER COLUMN BARS (U.O.S)
Lst (U.O.S) (REFER DWG G/1)
75 KICKER
OFFSET 75mm OR GREATER
Lst (TYP.)
3 SETS OF LINK FOR SUPPORT OF STARTER BARS OF SAME SIZE AS COLUMN/WALL LINKS
RC COLUMN/WALL REINF.
1
1
Lst (TYP.)
75
OFFSET < 75
SLOPE 1:10 (TYP) 1:6 (MAX)
3 SETS OF LINK FOR SUPPORT OF STARTER BARS
REINF. FROM LOWER FLOOR
SECTION-1-1

A) FOR COLUMN OFFSET > 75mm

TO BE VERIFIED BY THE CONSULTING ENGINEER

B) FOR COLUMN OFFSET < 75mm

COLUMN/WALL REINF. LAPPING DETAIL AT FLOOR LEVEL

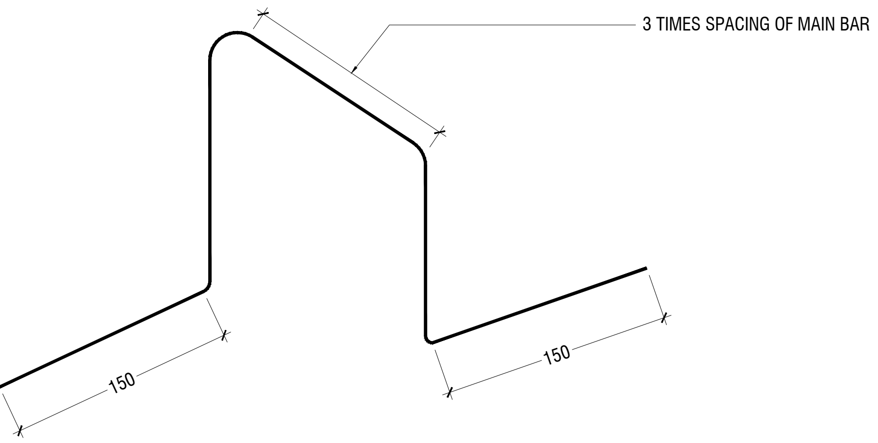
3 TIMES SPACING OF MAIN BAR
150
150

TYPICAL CHAIR DETAIL

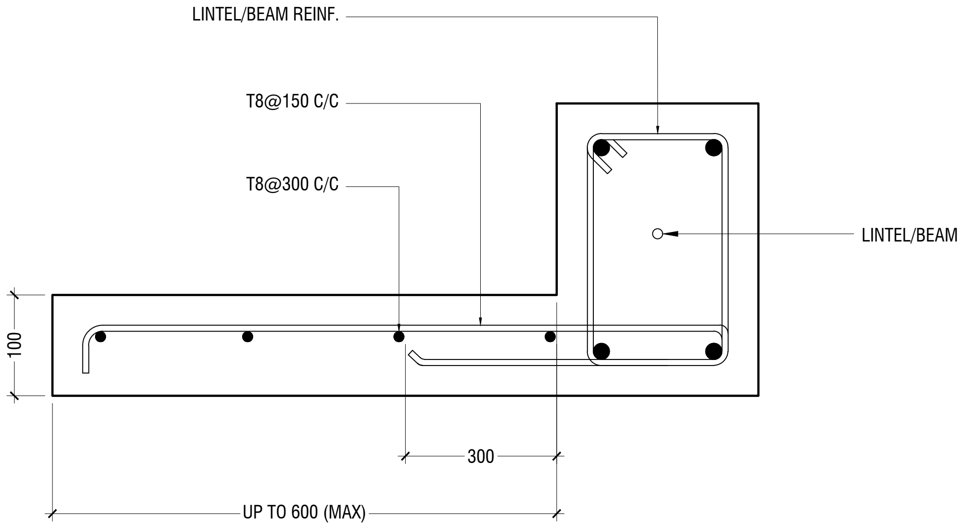
LINTEL/BEAM REINF.
T8@150 C/C
T8@300 C/C
LINTEL/BEAM
100
300
UP TO 600 (MAX)

TYPICAL CANTILEVER DETAILS

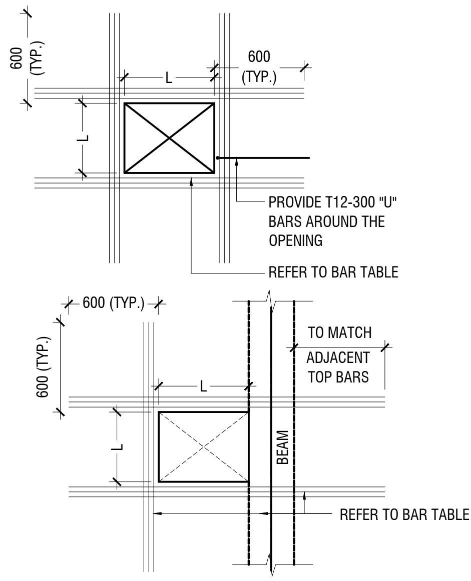
600 (TYP.)
L
600 (TYP.)
L
PROVIDE T12-300 "U" BARS AROUND THE OPENING
REFER TO BAR TABLE
600 (TYP.)
600 (TYP.)
L
TO MATCH ADJACENT TOP BARS
L
BEAM
REFER TO BAR TABLE

FLOOR OPENING (L)	ADD BARS
LESS THAN 250	3T12 T & B
L = > 250 < 500	3T16 T & B
L = ⩾ 500 < 1000	3T16 T & B

NOTE:-
1. FOR OPENINGS LESS THAN 200x200. SLAB REBARS TO BE ADJUSTED AROUND OPENING.
2. FOR OPENINGS GREATER THAN 250x250 TO BE APPROVED BY THE ENGINEER.
3. ALL SLAB OPENINGS LOCATION TO BE APPROVED BY THE ENGINEER.
4. EQUIVALENT OPENING AREA SHALL APPLY THE DETAILS SHOWN ABOVE.
5. EQUIVALENT OPENING AREA SHALL INCLUDE RECTANGLE, TRIANGLE AND ANY POLYGON SHAPE.
6. EXCEPT HACKING, NO SLAB CORING ARE ADVISABLE FOR POST-TENSIONED SLAB.

TYPICAL TRIMMER BARS DETAILS FOR OPENING IN SLABS

M.Mulaku School (3 story)
Client: Ministry of Education

Project Number: RI/2020/006
Date: June 2021
Architect : Mariyam Irasha Shareef
Engineer : Mohamed Muththalib Waleed
Drawn by : Mariyam Leevan Jaleel
Services : Aishath Ahmed
Interior : -

Rev no	Date
--	----------
--	----------
--	----------
--	----------

RIYAN PRIVATE LIMITED

t : +9603315049 **f** : +9603310776
e : info@riyan.com.mv
w : www.riyan.com.mv
3rd floor, H. Azum, Ameeneemagu, Male'

Title: General Notes

The contents of these drawings remain as a property of Riyan Private Limited. Any use other that those expressly stated is a violation of this copyright

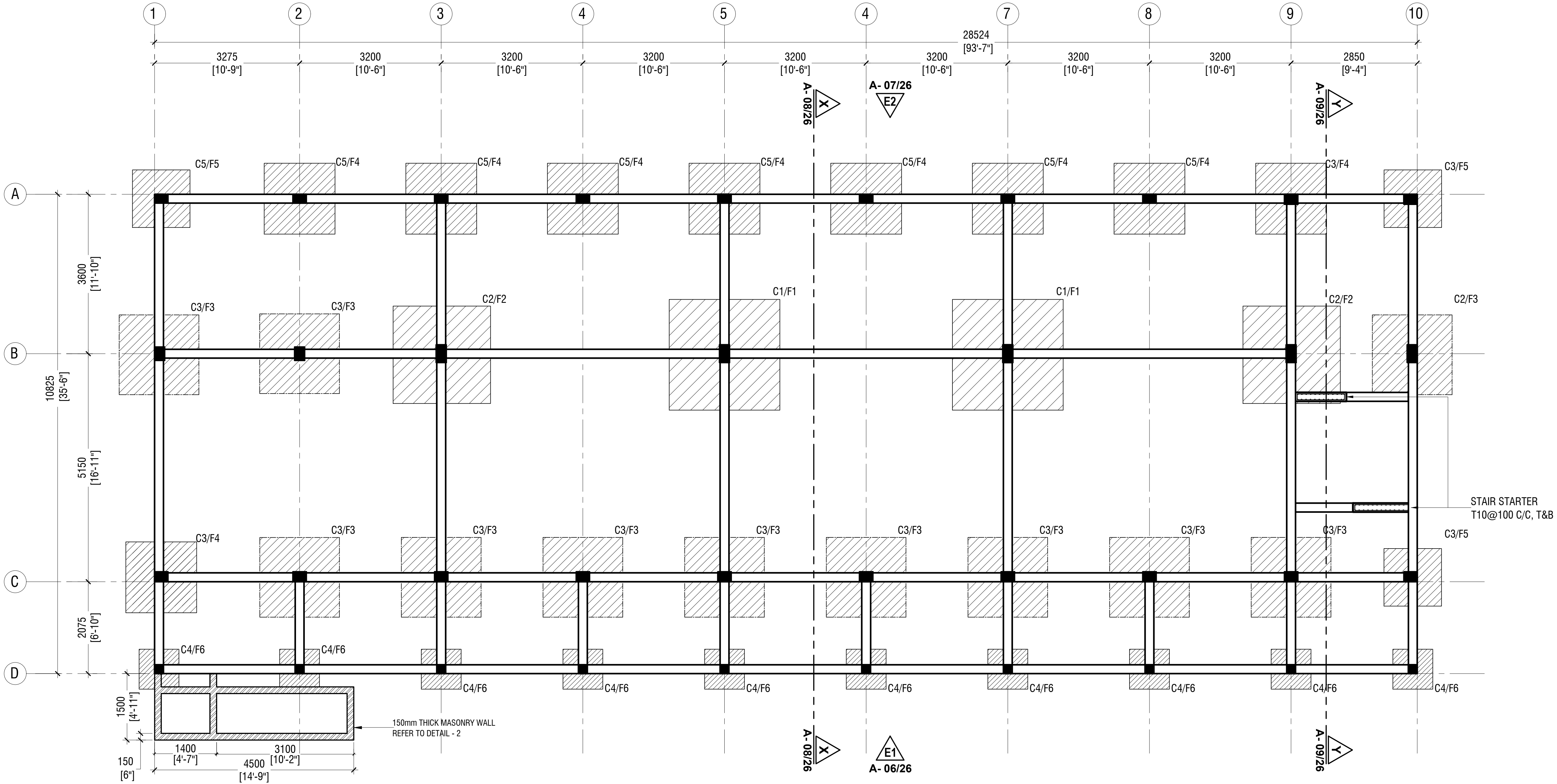
1
2
3
4
5
4
7
8
9
10
28524
[93'-7"]
3275
[10'-9"]
3200
[10'-6"]
2850
[9'-4"]
A- 08/26
X
A- 07/26
E2
A- 09/26
Y
A
B
C
D
3600
[11'-10"]
10825
[35'-6"]
5150
[16'-11"]
2075
[6'-10"]
C5/F5
C5/F4
C3/F4
C3/F5
C3/F3
C2/F2
C1/F1
C2/F3
STAIR STARTER
T10@100 C/C, T&B
C4/F6
1500
[4'-11"]
150
[6"]
1400
[4'-7"]
3100
[10'-2"]
4500
[14'-9"]
150mm THICK MASONRY WALL
REFER TO DETAIL - 2
A- 06/26
E1

FOUNDATION PLAN

SCALE 1:100

0 0.5 1 2 3 4 5

NOTE:

COLUMN SIZES

C1	: 225 x 400 mm
C2	: 225 x 400 mm
C3	: 225 x 300 mm
C4	: 200 x 200 mm
C5	: 200 x 300 mm
SC	: 150 x 150 mm
COVER	: 40mm

FOUNDATION PAD SIZES

	DIMENSION	REINFORCEMENT	FOUNDATION DEPTH
F1	2500 x 2500 x 400	T16@125 C/C B/W (B)	1300mm
F2	2200 x 2200 x 350	T16@150 C/C B/W (B)	1250mm
F3	1800 x 1800 x 300	T12@125 C/C B/W (B)	1200mm
F4	1600 x 1600 x 300	T12@150 C/C B/W (B)	1200mm
F5	1300 x 1300 x 300	T12@150 C/C B/W (B)	1200mm
F6	900 x 900 x 300	T12@150 C/C B/W (B)	1200mm

NOTE:

CONCRETE COVER

COLUMN	: 40mm
SLAB	: 30mm
BEAM	: 35mm
FOOTING	: 50mm
TIE BEAM	: 50mm

LAP LENGTH FOR BARS

25MM	: 1125 mm
20MM	: 900 mm
16MM	: 720 mm
12MM	: 550 mm
10MM	: 450 mm

CONCRETE GRADE = M25

SAFE BEARING CAPACITY = 150KPa

HOOK LENGTH AND OTHER DETAILS ARE PROVIDED IN THE GENERAL NOTES

FOUNDATION DEPTH : REFER TO FOUNDATION TABLE

ALL FOOTINGS ARE TO BE LAID ON TOP OF 50mm THICK LEAN CONCRETE
APPLY WATER PROOFING TO SUBSTRUCTURE
(BELOW GROUND ELEMENTS)

TIE BEAM SIZES (ALL TIE BEAMS ARE TB)

TB	: 200 x 450 mm
COVER	: 50mm

GROUND SLAB : 100mm THK RC SLAB ON FILL
REINFORCED WITH T10@200 C/C BW

▨ -150mm THK. SOLID MASONRY BLOCK WALL

RAMP SLAB : 100mm THK RC SLAB ON COMPACTED FILL
REINFORCED WITH T10@200 C/C BW

M.Mulaku School (3 story)
Client: Ministry of Education

Project Number: RI/2020/006
Date: June 2021
Architect : Mariyam Irasha Shareef
Engineer : Mohamed Muththalib Waleed
Drawn by : Mariyam Leevan Jaleel
Services : Aishath Ahmed
Interior : -

Rev no	Date
--	----------
--	----------
--	----------
--	----------

RIYAN PRIVATE LIMITED

t : +9603315049 f : +9603310776
e : info@riyan.com.mv
w : www.riyan.com.mv
3rd floor, H. Azum, Ameeneemagu, Male'

Title: Foundation Plan

The contents of these drawings remain as a property of Riyan Private Limited. Any use other that those expressly stated is a violation of this copyright

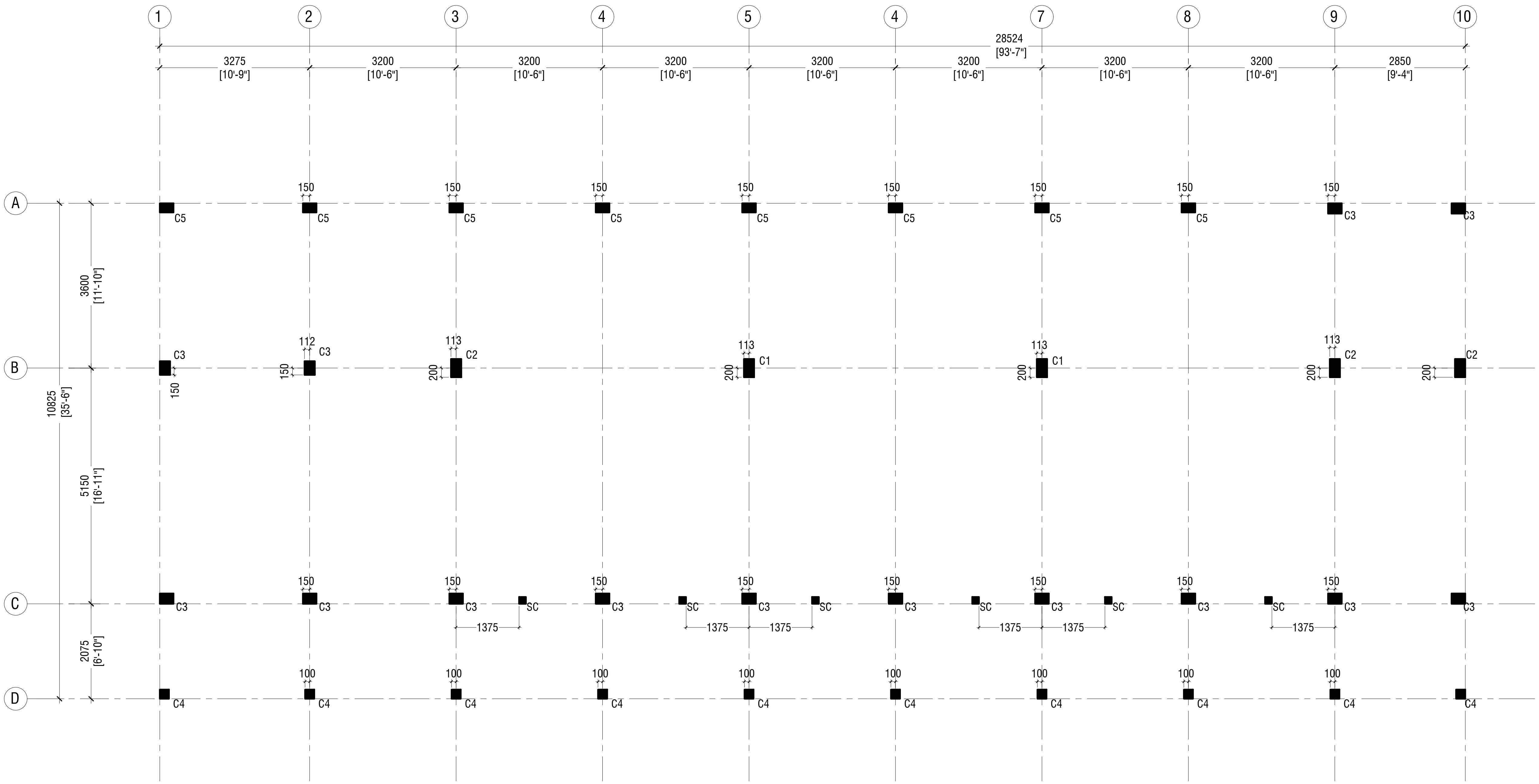
1
2
3
4
5
4
7
8
9
10
28524
[93'-7"]
3275
[10'-9"]
3200
[10'-6"]
3200
[10'-6"]
3200
[10'-6"]
3200
[10'-6"]
3200
[10'-6"]
3200
[10'-6"]
3200
[10'-6"]
2850
[9'-4"]
A
B
C
D
3600
[11'-10"]
5150
[16'-11"]
2075
[6'-10"]
10825
[35'-6"]
150
C5
C3
112
113
C2
C1
200
1375
SC
100
C4

NOTE:

COLUMN SIZES

C1	: 225 x 400 mm
C2	: 225 x 400 mm
C3	: 225 x 300 mm
C4	: 200 x 200 mm
C5	: 200 x 300 mm
SC	: 150 x 150 mm
COVER	: 40mm

GROUND & SECOND FLOOR COLUMN LAYOUT PLAN

SCALE 1:100

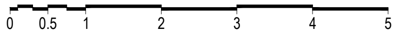

M.Mulaku School (3 story)
Client: Ministry of Education

Project Number: RI/2020/006
Date: June 2021
Architect : Mariyam Irasha Shareef
Engineer : Mohamed Muththalib Waleed
Drawn by : Mariyam Leevan Jaleel
Services : Aishath Ahmed
Interior : -

Rev no	Date
--	----------------
--	----------------
--	----------------
--	----------------

RIYAN PRIVATE LIMITED

t : +9603315049 **f** : +9603310776
e : info@riyan.com.mv
w : www.riyan.com.mv
3rd floor, H. Azum, Ameeneemagu, Male'

Title: Gound & Second Floor
Column Layout Plan

Page: S-02/13

The contents of these drawings remain as a property of Riyan Private Limited. Any use other that those expressly stated is a violation of this copyright

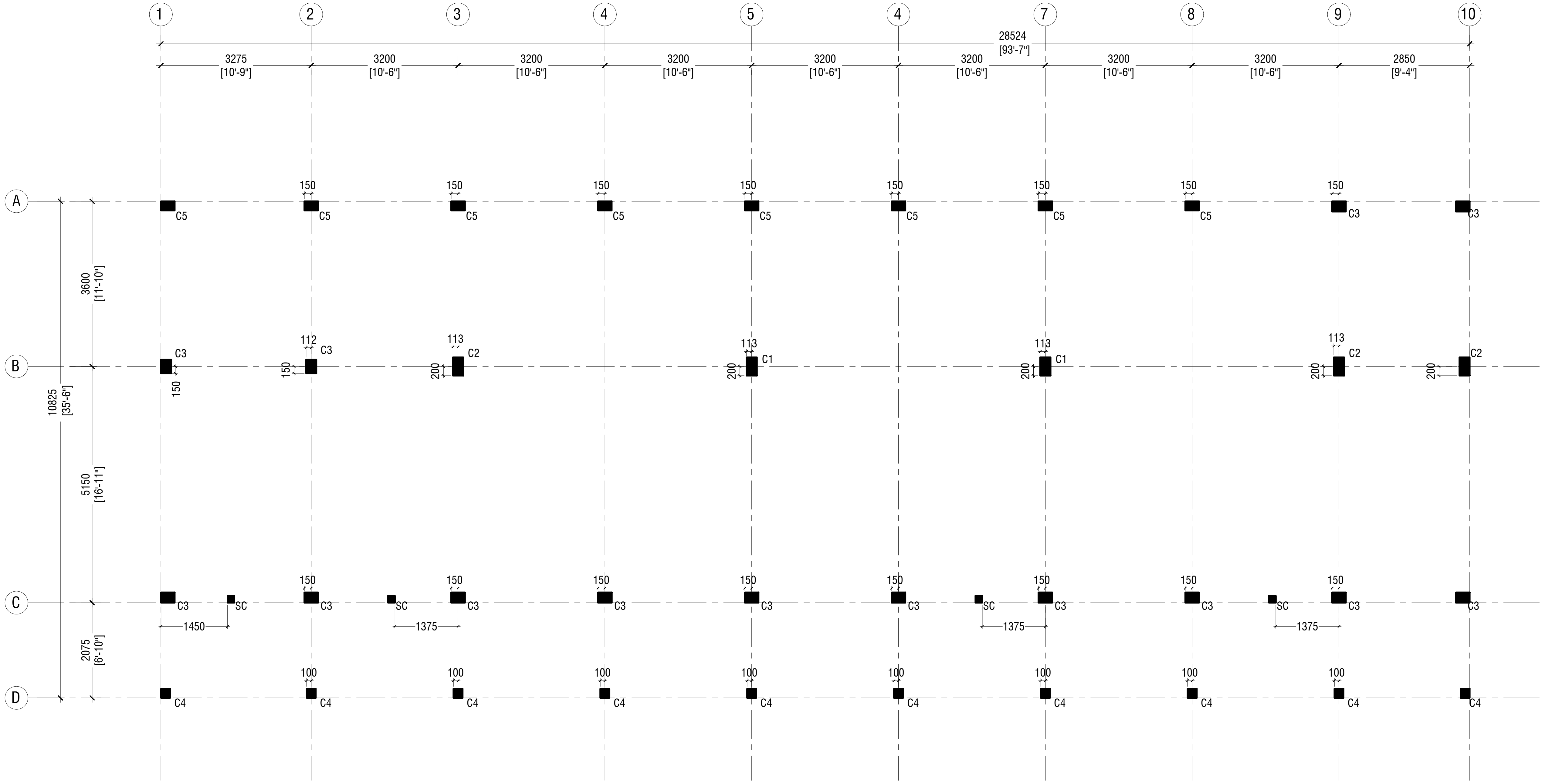
1
2
3
4
5
4
7
8
9
10
28524
[93'-7"]
3275
[10'-9"]
3200
[10'-6"]
2850
[9'-4"]
A
B
C
D
3600
[11'-10"]
5150
[16'-11"]
2075
[6'-10"]
10825
[35'-6"]
150
112
113
200
100
1450
1375
C1
C2
C3
C4
C5
SC

FIRST FLOOR COLUMN LAYOUT PLAN

SCALE 1:100

0 0.5 1 2 3 4 5

NOTE:

COLUMN SIZES

C1	: 225 x 400 mm
C2	: 225 x 400 mm
C3	: 225 x 300 mm
C4	: 200 x 200 mm
C5	: 200 x 300 mm
SC	: 150 x 150 mm
COVER	: 40mm

M.Mulaku School (3 story)
Client: Ministry of Education

Project Number: RI/2020/006
Date: June 2021
Architect : Mariyam Irasha Shareef
Engineer : Mohamed Muththalib Waleed
Drawn by : Mariyam Leevan Jaleel
Services : Aishath Ahmed
Interior : -

Rev no	Date
--	----------
--	----------
--	----------
--	----------

RIYAN PRIVATE LIMITED

t : +9603315049 f : +9603310776
e : info@riyan.com.mv
w : www.riyan.com.mv
3rd floor, H. Azum, Ameeneemagu, Male'

Title: First Floor Column Layout Plan

Page: S-03/13

The contents of these drawings remain as a property of Riyan Private Limited. Any use other that those expressly stated is a violation of this copyright

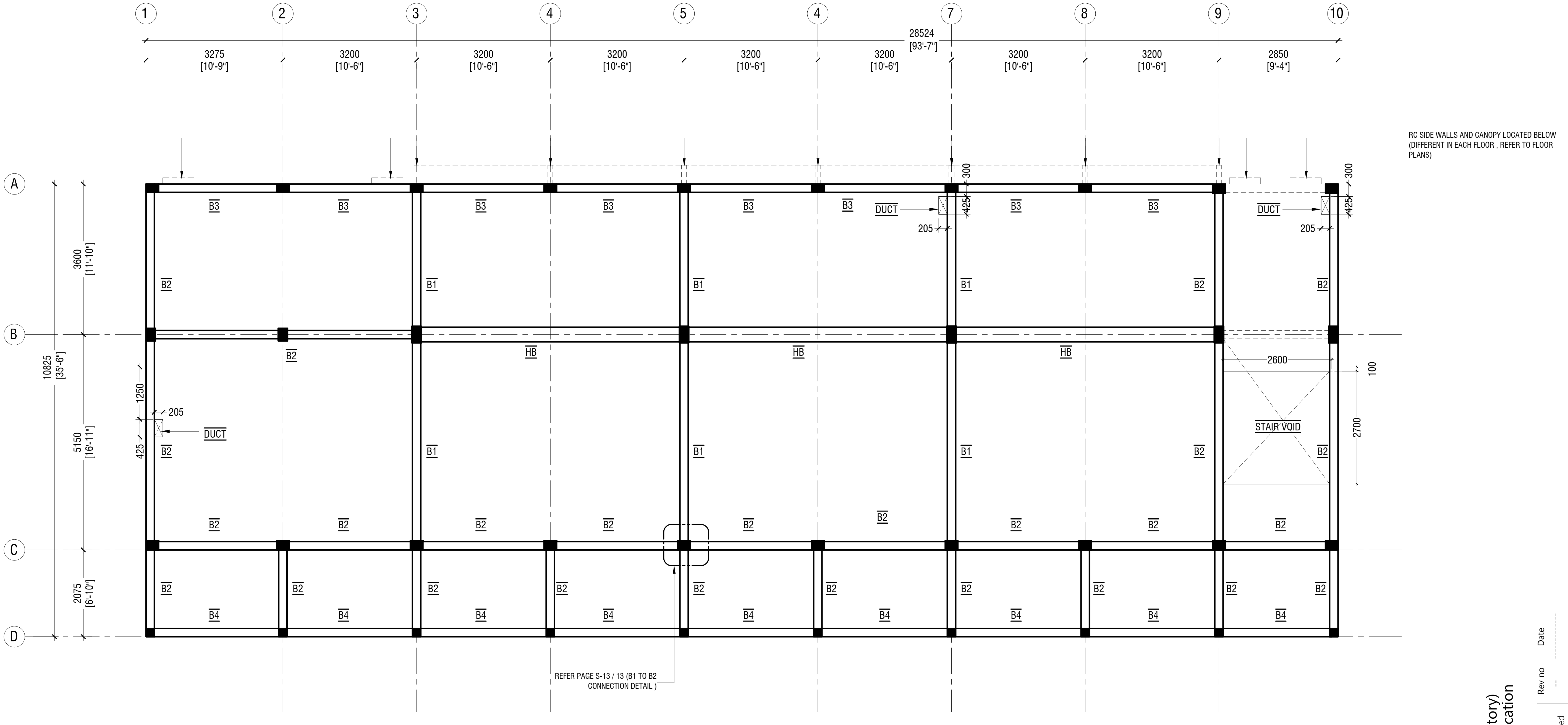
1
2
3
4
5
4
7
8
9
10
28524
[93'-7"]
3275
[10'-9"]
3200
[10'-6"]
2850
[9'-4"]
A
B
C
D
3600
[11'-10"]
5150
[16'-11"]
2075
[6'-10"]
10825
[35'-6"]
RC SIDE WALLS AND CANOPY LOCATED BELOW (DIFFERENT IN EACH FLOOR , REFER TO FLOOR PLANS)
B1
B2
B3
B4
HB
DUCT
205
425
300
1250
2600
100
2700
STAIR VOID
REFER PAGE S-13 / 13 (B1 TO B2 CONNECTION DETAIL)

NOTE:

COLUMN SIZES

C1	: 225 x 400 mm
C2	: 225 x 400 mm
C3	: 225 x 300 mm
C4	: 200 x 200 mm
C5	: 200 x 300 mm
SC	: 150 x 150 mm
COVER	: 40mm

BEAM SIZES

B1	: 200x475 mm
B2	: 200x400 mm
B3	: 200x400 mm
B4	: 200x400 mm
HB	: 400x180 mm
COVER	: 35mm

FIRST - SECOND FLOOR BEAM PLAN

SCALE 1:100

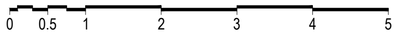

M.Mulaku School (3 story)
Client: Ministry of Education

Project Number: RI/2020/006
Date: June 2021
Architect : Mariyam Irasha Shareef
Engineer : Mohamed Muththalib Waleed
Drawn by : Mariyam Leevan Jaleel
Services : Aishath Ahmed
Interior : -

Rev no	Date
--	----------------
--	----------------
--	----------------
--	----------------

RIYAN PRIVATE LIMITED

t : +9603315049 f : +9603310776
e : info@riyan.com.mv
w : www.riyan.com.mv
3rd floor, H. Azum, Ameeneemagu, Male'

Title: First Floor Beam Plan

The contents of these drawings remain as a property of Riyan Private Limited. Any use other that those expressly stated is a violation of this copyright

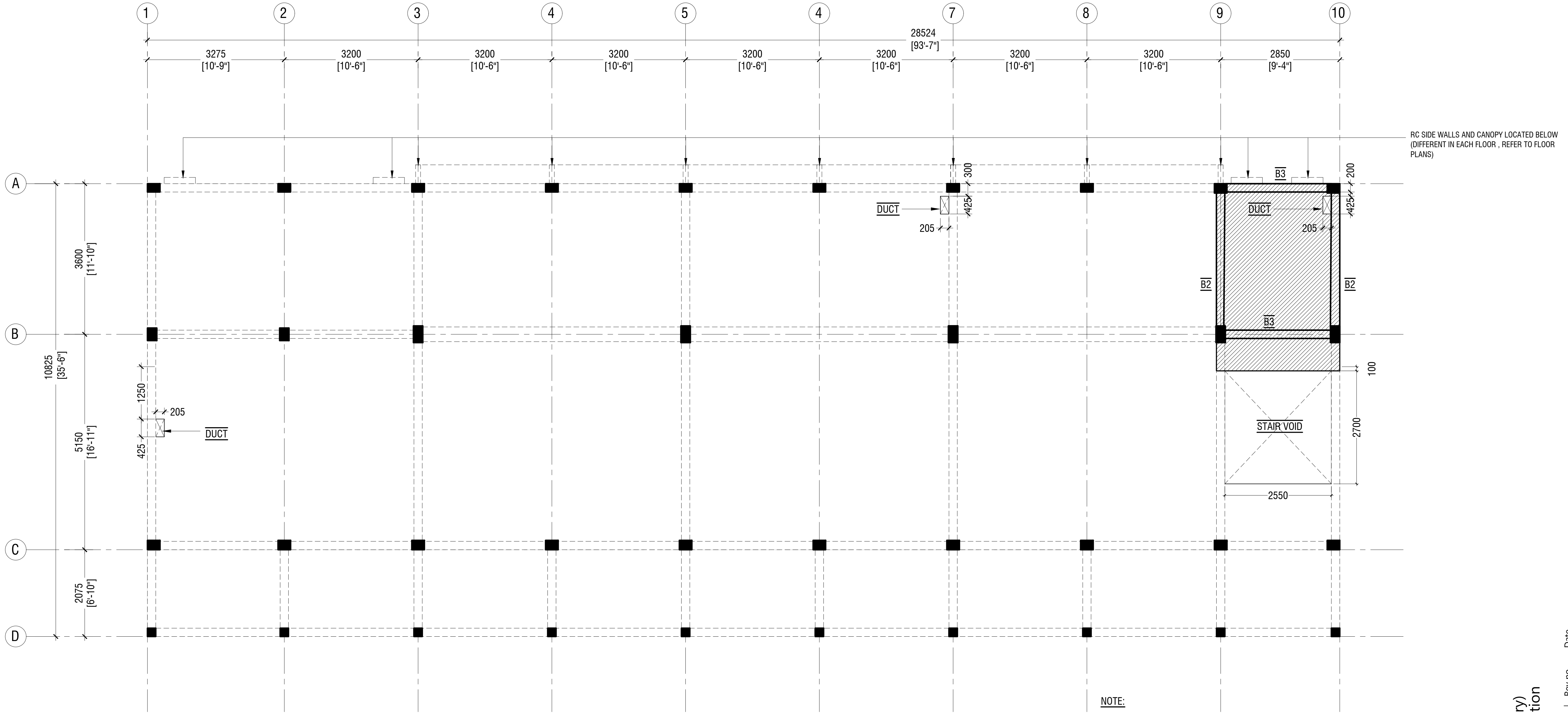
1
2
3
4
5
4
7
8
9
10
28524
[93'-7"]
3275
[10'-9"]
3200
[10'-6"]
3200
[10'-6"]
3200
[10'-6"]
3200
[10'-6"]
3200
[10'-6"]
3200
[10'-6"]
3200
[10'-6"]
2850
[9'-4"]
RC SIDE WALLS AND CANOPY LOCATED BELOW (DIFFERENT IN EACH FLOOR , REFER TO FLOOR PLANS)
A
B
C
D
3600
[11'-10"]
10825
[35'-6"]
5150
[16'-11"]
2075
[6'-10"]
300
200
425
425
205
205
DUCT
DUCT
DUCT
B3
B3
B2
B2
100
2700
STAIR VOID
2550
1250
205
425

NOTE:

COLUMN SIZES

C1	: 225 x 400 mm
C2	: 225 x 400 mm
C3	: 225 x 300 mm
C4	: 200 x 200 mm
C5	: 200 x 300 mm
SC	: 150 x 150 mm
COVER	: 40mm

BEAM SIZES

B1	: 200x475 mm
B2	: 200x400 mm
B3	: 200x400 mm
B4	: 200x400 mm
HB	: 400x180 mm
COVER	: 35mm

▨ SLAB THICKNESS: 150mm

REINFORCEMENT: T10@150C/C B/W (T&B)

ALL REINFORCEMENT TO BE DISCONTINUOUS OVER THE VOIDS

STORE / HALF LANDING FLOOR BEAM & SLAB REINFORCEMENT PLAN (+1865 & +4865)

SCALE 1:100

0 0.5 1 2 3 4 5

M.Mulaku School (3 story)
Client: Ministry of Education

Project Number: RI/2020/006
Date: June 2021
Architect : Mariyam Irasha Shareef
Engineer : Mohamed Muththalib Waleed
Drawn by : Mariyam Leevan Jaleel
Services : Aishath Ahmed
Interior : -

Rev no	Date
--	------------
--	------------
--	------------
--	------------

RIYAN PRIVATE LIMITED

t : +9603315049 f : +9603310776
e : info@riyan.com.mv
w : www.riyan.com.mv
3rd floor, H. Azum, Ameeneemagu, Male'

Title: Store / Half Landing Beam & Slab Rein. Plan

Page: S-05/13

The contents of these drawings remain as a property of Riyan Private Limited. Any use other that those expressly stated is a violation of this copyright

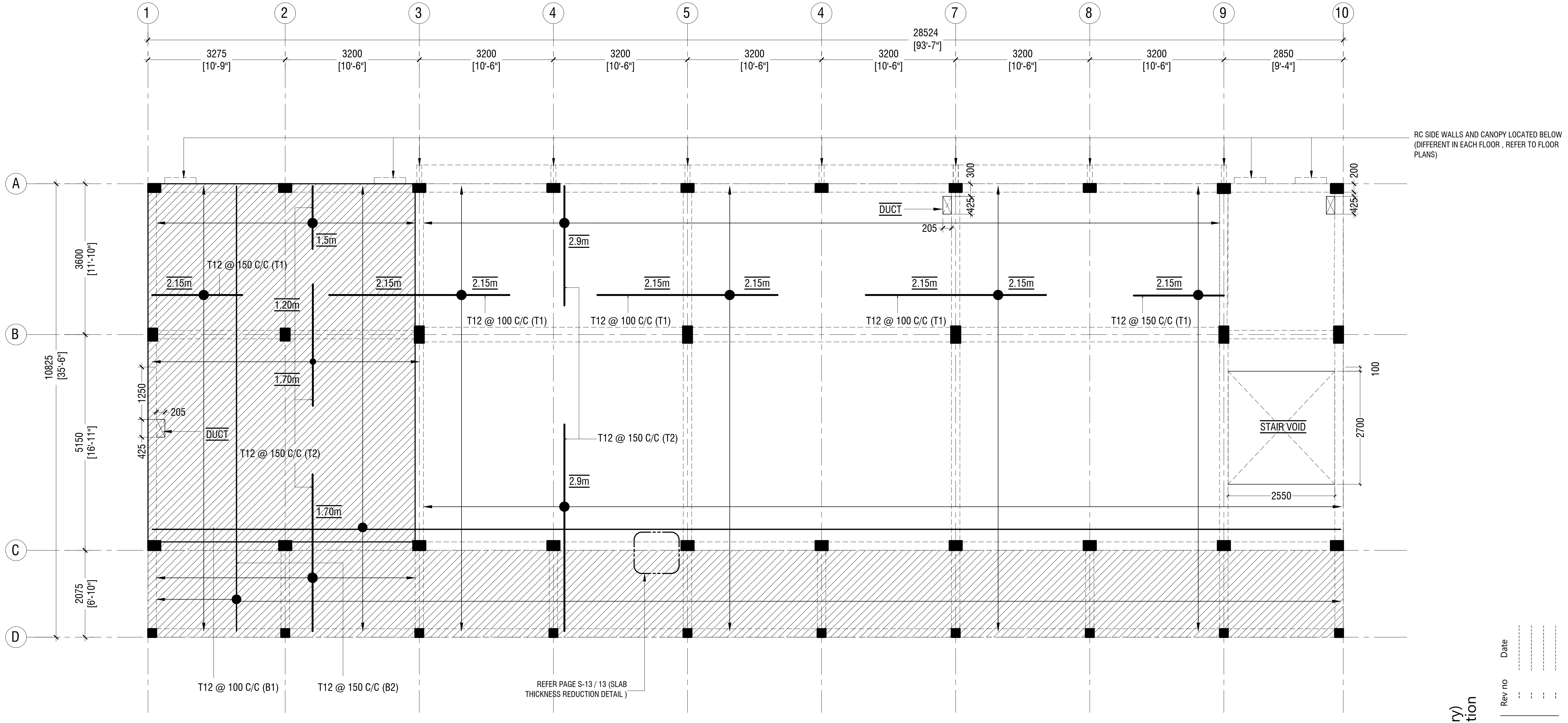
1
2
3
4
5
4
7
8
9
10
28524
[93'-7"]
3275
[10'-9"]
3200
[10'-6"]
3200
[10'-6"]
3200
[10'-6"]
3200
[10'-6"]
3200
[10'-6"]
3200
[10'-6"]
3200
[10'-6"]
2850
[9'-4"]
RC SIDE WALLS AND CANOPY LOCATED BELOW (DIFFERENT IN EACH FLOOR , REFER TO FLOOR PLANS)
A
B
C
D
3600
[11'-10"]
10825
[35'-6"]
5150
[16'-11"]
2075
[6'-10"]
1250
205
425
DUCT
300
425
DUCT
205
200
425
1.5m
2.9m
T12 @ 150 C/C (T1)
2.15m
2.15m
2.15m
2.15m
2.15m
2.15m
2.15m
2.15m
1.20m
T12 @ 100 C/C (T1)
T12 @ 100 C/C (T1)
T12 @ 100 C/C (T1)
T12 @ 150 C/C (T1)
1.70m
T12 @ 150 C/C (T2)
T12 @ 150 C/C (T2)
2.9m
1.70m
100
STAIR VOID
2700
2550
T12 @ 100 C/C (B1)
T12 @ 150 C/C (B2)
REFER PAGE S-13 / 13 (SLAB THICKNESS REDUCTION DETAIL)

NOTE

☐	SLAB THICKNESS:	180mm
▨	SLAB THICKNESS:	135mm
- - - -	BOTTOM REINFORCEMENT:	T12@100C/C ALONG SHORT DIRECTION (B1) T12@ 150 C/C ALONG LONGER DIRECTION (B2)
——	TOP REINFORCEMENT:	T12@150C/C (AS SHOWN, UNLESS STATED)
	TOP DISTRIBUTION STEEL:	T12@150C/C (NOT SHOWN)

ALL REINFORCEMENT TO BE DISCONTINUOUS OVER THE VOIDS

FIRST & SECOND FLOOR SLAB REINFORCEMENT PLAN

SCALE 1:100

0 0.5 1 2 3 4 5

M.Mulaku School (3 story)
Client: Ministry of Education

Project Number: RI/2020/006
Date: June 2021
Architect : Mariyam Irasha Shareef
Engineer : Mohamed Muththalib Waleed
Drawn by : Mariyam Leevan Jaleel
Services : Aishath Ahmed
Interior : -

Rev no	Date
--	----------
--	----------
--	----------
--	----------

RIYAN PRIVATE LIMITED

t : +9603315049 f : +9603310776
e : info@riyan.com.mv
w : www.riyan.com.mv
3rd floor, H. Azum, Ameeneemagu, Male'

Title: First Floor Slab
Reinforcement Plan

Page: S-06/13

The contents of these drawings remain as a property of Riyan Private Limited. Any use other that those expressly stated is a violation of this copyright

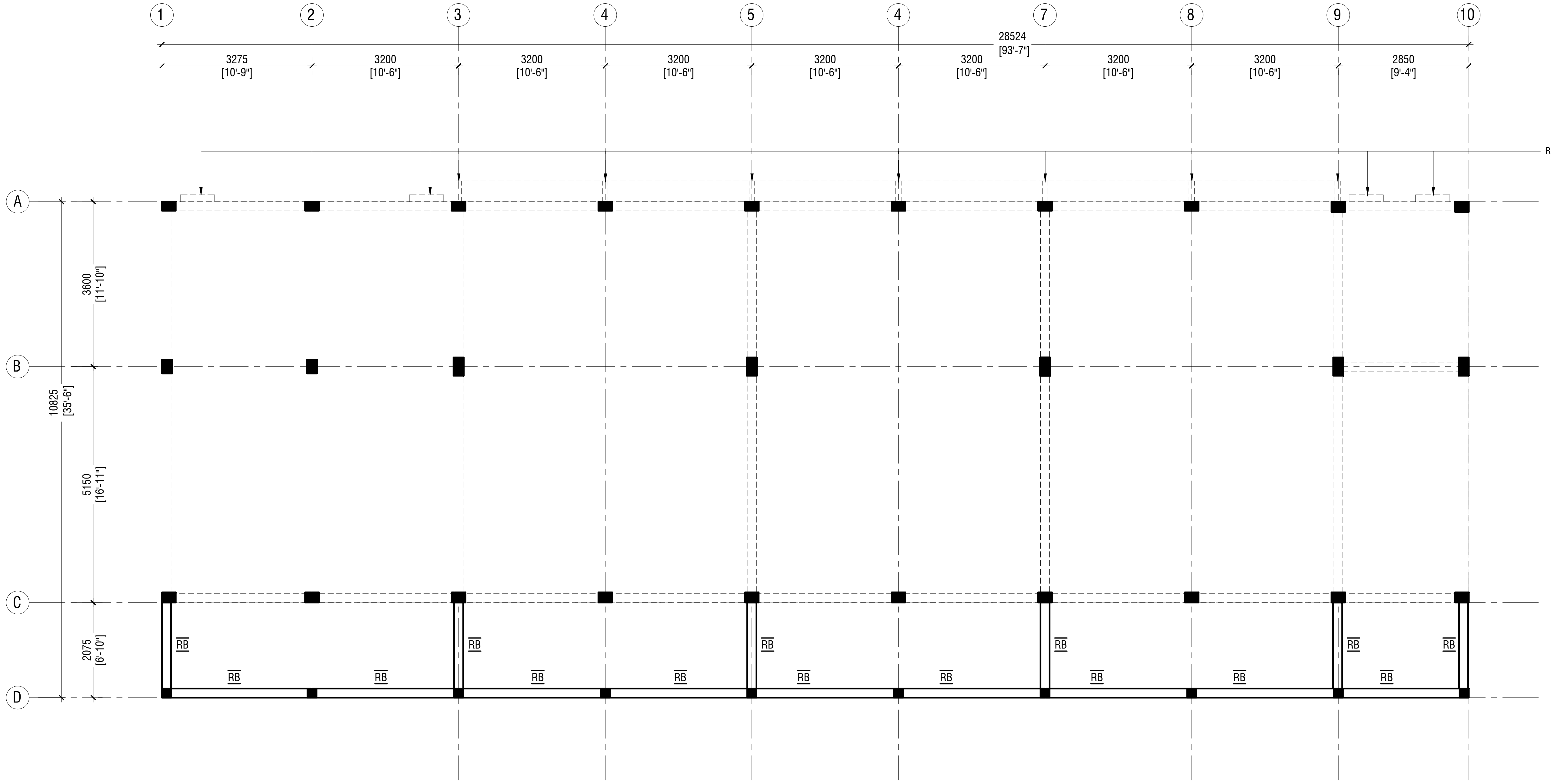
1
2
3
4
5
4
7
8
9
10
28524
[93'-7"]
3275
[10'-9"]
3200
[10'-6"]
3200
[10'-6"]
3200
[10'-6"]
3200
[10'-6"]
3200
[10'-6"]
3200
[10'-6"]
3200
[10'-6"]
2850
[9'-4"]
RC SIDE WALLS AND CANOPY LOCATED BELOW
A
B
C
D
3600
[11'-10"]
10825
[35'-6"]
5150
[16'-11"]
2075
[6'-10"]
RB
RB
RB
RB
RB
RB
RB
RB
RB
RB
RB
RB
RB
RB
RB
RB
RB

ROOF BEAM PLAN - 1 @9.15 FROM F.F.L

SCALE 1:100

0 0.5 1 2 3 4 5

NOTE:

COLUMN SIZES

C1 : 225 x 400 mm
C2 : 225 x 400 mm
C3 : 225 x 300 mm
C4 : 200 x 200 mm
C5 : 200 x 300 mm
SC : 150 x 150 mm
COVER : 40mm

BEAM SIZES

RB : 200x300 mm
COVER : 35mm

M.Mulaku School (3 story)
Client: Ministry of Education

Project Number: RI/2020/006
Date: June 2021
Architect : Mariyam Irasha Shareef
Engineer : Mohamed Muththalib Waleed
Drawn by : Mariyam Leevan Jaleel
Services : Aishath Ahmed
Interior : -

Rev no	Date
--	----------
--	----------
--	----------
--	----------

RIYAN PRIVATE LIMITED

t : +9603315049 f : +9603310776
e : info@riyan.com.mv
w : www.riyan.com.mv
3rd floor, H. Azum, Ameeneemagu, Male'

Title: Roof Beam Plan 1

Page: S-07/13

The contents of these drawings remain as a property of Riyan Private Limited. Any use other that those expressly stated is a violation of this copyright

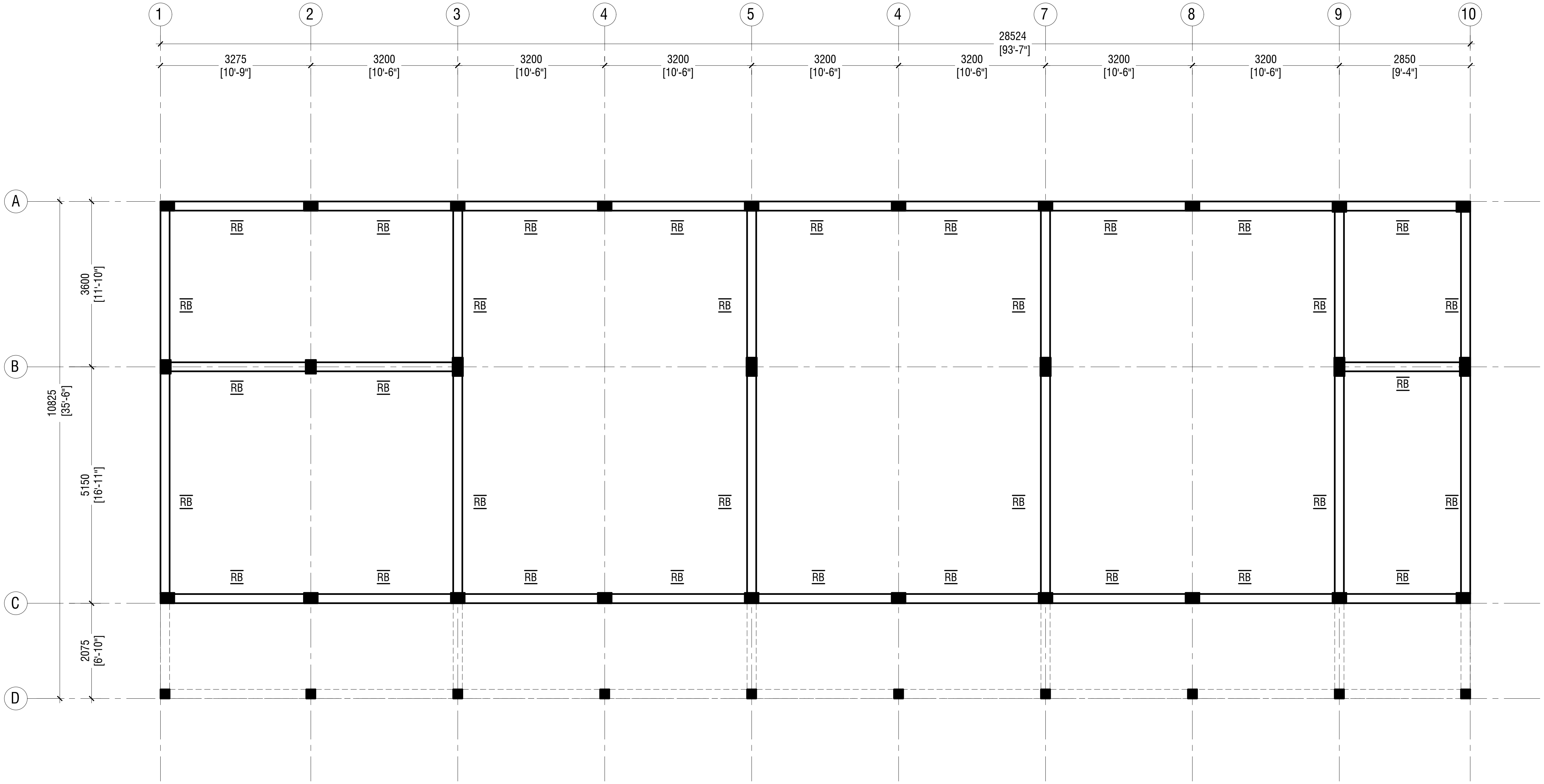
1
2
3
4
5
4
7
8
9
10
28524
[93'-7"]
3275
[10'-9"]
3200
[10'-6"]
3200
[10'-6"]
3200
[10'-6"]
3200
[10'-6"]
3200
[10'-6"]
3200
[10'-6"]
3200
[10'-6"]
2850
[9'-4"]
A
B
C
D
3600
[11'-10"]
10825
[35'-6"]
5150
[16'-11"]
2075
[6'-10"]
RB
RB
RB
RB
RB
RB
RB
RB
RB
RB
RB
RB
RB
RB
RB
RB
RB
RB
RB
RB
RB
RB
RB
RB
RB
RB
RB
RB
RB
RB
RB
RB
RB

ROOF BEAM PLAN - 2 @9.706 FROM F.F.L

SCALE 1:100

0 0.5 1 2 3 4 5

NOTE:

COLUMN SIZES

C1 : 225 x 400 mm
C2 : 225 x 400 mm
C3 : 225 x 300 mm
C4 : 200 x 200 mm
C5 : 200 x 300 mm
SC : 150 x 150 mm
COVER : 40mm

BEAM SIZES

RB : 200x300 mm
COVER : 35mm

M.Mulaku School (3 story)
Client: Ministry of Education

Project Number: RI/2020/006
Date: June 2021
Architect : Mariyam Irasha Shareef
Engineer : Mohamed Muththalib Waleed
Drawn by : Mariyam Leevan Jaleel
Services : Aishath Ahmed
Interior : -

Rev no	Date
--	----------------
--	----------------
--	----------------
--	----------------

RIYAN PRIVATE LIMITED

t : +9603315049 f : +9603310776
e : info@riyan.com.mv
w : www.riyan.com.mv
3rd floor, H. Azum, Ameeneemagu, Male'

Title: Roof Beam Plan 2

Page: S-08/13

The contents of these drawings remain as a property of Riyan Private Limited. Any use other that those expressly stated is a violation of this copyright

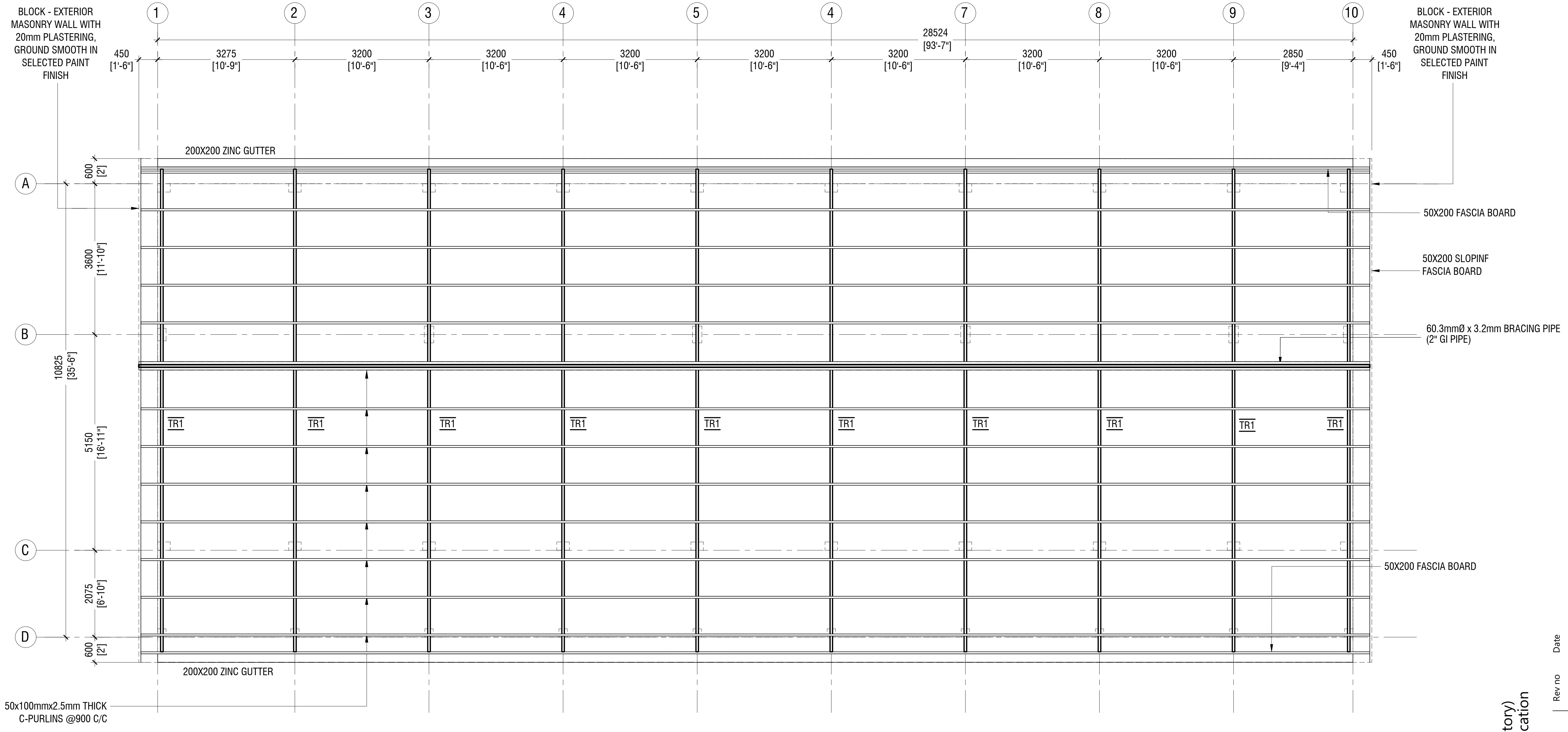
BLOCK - EXTERIOR MASONRY WALL WITH 20mm PLASTERING, GROUND SMOOTH IN SELECTED PAINT FINISH
1
2
3
4
5
4
7
8
9
10
28524
[93'-7"]
450
[1'-6"]
3275
[10'-9"]
3200
[10'-6"]
3200
[10'-6"]
3200
[10'-6"]
3200
[10'-6"]
3200
[10'-6"]
3200
[10'-6"]
3200
[10'-6"]
2850
[9'-4"]
450
[1'-6"]
BLOCK - EXTERIOR MASONRY WALL WITH 20mm PLASTERING, GROUND SMOOTH IN SELECTED PAINT FINISH
200X200 ZINC GUTTER
A
B
C
D
600
[2']
3600
[11'-10"]
10825
[35'-6"]
5150
[16'-11"]
2075
[6'-10"]
600
[2']
50X200 FASCIA BOARD
50X200 SLOPINF FASCIA BOARD
60.3mmØ x 3.2mm BRACING PIPE (2" GI PIPE)
TR1
TR1
TR1
TR1
TR1
TR1
TR1
TR1
TR1
TR1
50X200 FASCIA BOARD
200X200 ZINC GUTTER
50x100mmx2.5mm THICK C-PURLINS @900 C/C

ROOF TRUSS & FRAMING PLAN

SCALE 1:100

0 0.5 1 2 3 4 5

M.Mulaku School (3 story)
Client: Ministry of Education

Project Number: RI/2020/006
Date: June 2021
Architect : Mariyam Irasha Shareef
Engineer : Mohamed Muththalib Waleed
Drawn by : Mariyam Leevan Jaleel
Services : Aishath Ahmed
Interior : -

Rev no	Date
--	----------
--	----------
--	----------
--	----------

RIYAN PRIVATE LIMITED
t : +9603315049 f : +9603310776
e : info@riyan.com.mv
w : www.riyan.com.mv
3rd floor, H. Azum, Ameeneemagu, Male'

Title: Roof Truss and Framing Plan

Page: S-09/13

The contents of these drawings remain as a property of Riyan Private Limited. Any use other that those expressly stated is a violation of this copyright

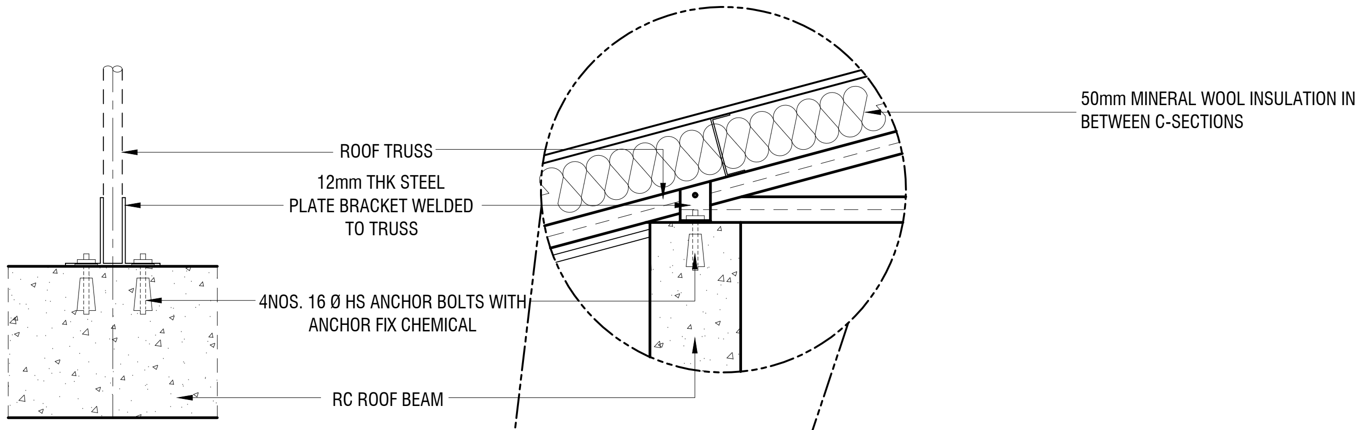
ROOF TRUSS
12mm THK STEEL
PLATE BRACKET WELDED
TO TRUSS
4NOS. 16 Ø HS ANCHOR BOLTS WITH
ANCHOR FIX CHEMICAL
RC ROOF BEAM
50mm MINERAL WOOL INSULATION IN
BETWEEN C-SECTIONS

ELEVATION

SCALE 1:20

SECTION

SCALE 1:20

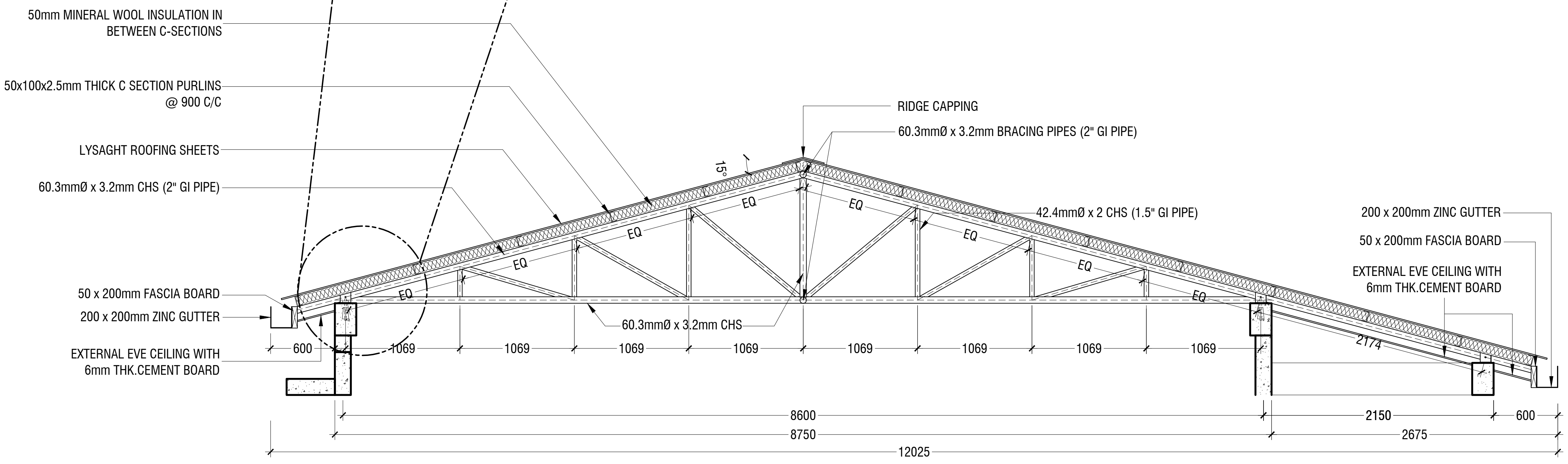
50mm MINERAL WOOL INSULATION IN
BETWEEN C-SECTIONS
50x100x2.5mm THICK C SECTION PURLINS
@ 900 C/C
LYSAGHT ROOFING SHEETS
60.3mmØ x 3.2mm CHS (2" GI PIPE)
50 x 200mm FASCIA BOARD
200 x 200mm ZINC GUTTER
EXTERNAL EVE CEILING WITH
6mm THK.CEMENT BOARD
RIDGE CAPPING
60.3mmØ x 3.2mm BRACING PIPES (2" GI PIPE)
15°
EQ
42.4mmØ x 2 CHS (1.5" GI PIPE)
60.3mmØ x 3.2mm CHS
200 x 200mm ZINC GUTTER
50 x 200mm FASCIA BOARD
EXTERNAL EVE CEILING WITH
6mm THK.CEMENT BOARD
2174
600
1069
1069
1069
1069
1069
1069
1069
1069
8600
2150
600
8750
2675
12025

TRUSS TYPE TR1

SCALE 1:50

0 0.25 0.5 1 1.5 2 2.5

NOTE
- CORROSION PROTECTION: GALVANIZED COATING THICKNESS SHALL NOT BE LESS THAN 80 MICRONS
- ALL FILLET WELDS TO BE 4mm THICK
- CONTRACTOR AND CONSULTANT TO CONFIRM ON SITE TRUSS SPAN AND DIMENSIONS BEFORE FABRICATION

M.Mulaku School (3 story)
Client: Ministry of Education

Project Number: RI/2020/006
Date: June 2021
Architect : Mariyam Irasha Shareef
Engineer : Mohamed Muththalib Waleed
Drawn by : Mariyam Leevan Jaleel
Services : Aishath Ahmed
Interior : -

Rev no	Date
--	----------
--	----------
--	----------
--	----------

RIYAN PRIVATE LIMITED

t : +9603315049 **f** : +9603310776
e : info@riyan.com.mv
w : www.riyan.com.mv
3rd floor, H. Azum, Ameeneemagu, Male'

Title: Truss TR1 Detail

Page: S-10/13

The contents of these drawings remain as a property of Riyan Private Limited. Any use other that those expressly stated is a violation of this copyright

	DIMENSION	REINFORCEMENT	FOUNDATION DEPTH
F1	2500 x 2500 x 400	T16@125 C/C B/W (B)	1300mm
F2	2200 x 2200 x 350	T16@150 C/C B/W (B)	1250mm
F3	1800 x 1800 x 300	T12@125 C/C B/W (B)	1200mm
F4	1600 x 1600 x 300	T12@150 C/C B/W (B)	1200mm
F5	1300 x 1300 x 300	T12@150 C/C B/W (B)	1200mm
F6	900 x 900 x 300	T12@150 C/C B/W (B)	1200mm

NOTE:-
COVER TO FOUNDATION = 50mm
COVER TO COLUMNS = 40mm
COVER TO BEAMS = 35mm
COVER TO SLAB = 30mm
LAPS = Ø OF BAR x 45
BEAMS @END SUPPORT = Ø OF BAR x 12

GRADE OF CONCRETE = M25

FOUNDATION PADS

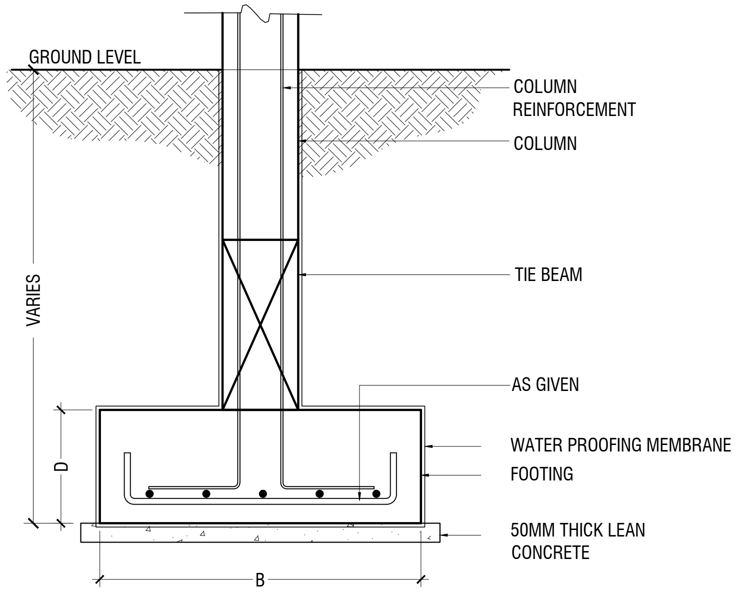
GROUND LEVEL
COLUMN REINFORCEMENT
COLUMN
TIE BEAM
VARIES
AS GIVEN
WATER PROOFING MEMBRANE
FOOTING
D
50MM THICK LEAN CONCRETE
B

TYPICAL FOOTING SECTION

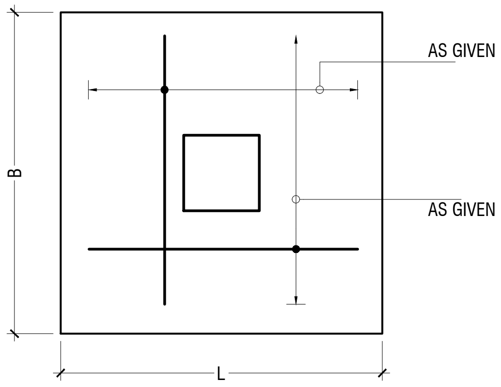
AS GIVEN
AS GIVEN
B
L

PLAN

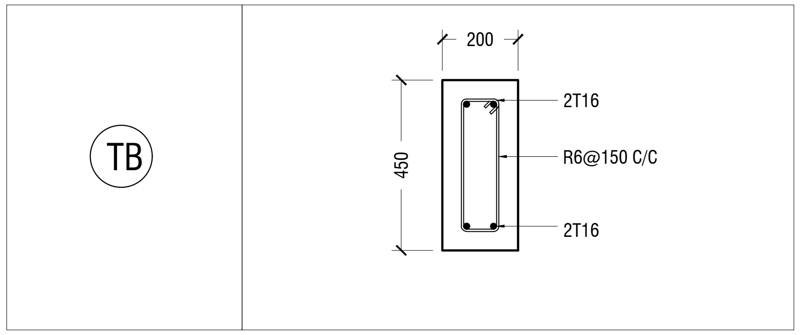
TB
200
450
2T16
R6@150 C/C
2T16

FOUNDATION DETAILS

NOTE:-
TIE BEAM REINFORCEMENT TO GO THROUGH BETWEEN COLUMN REINFORCEMENT

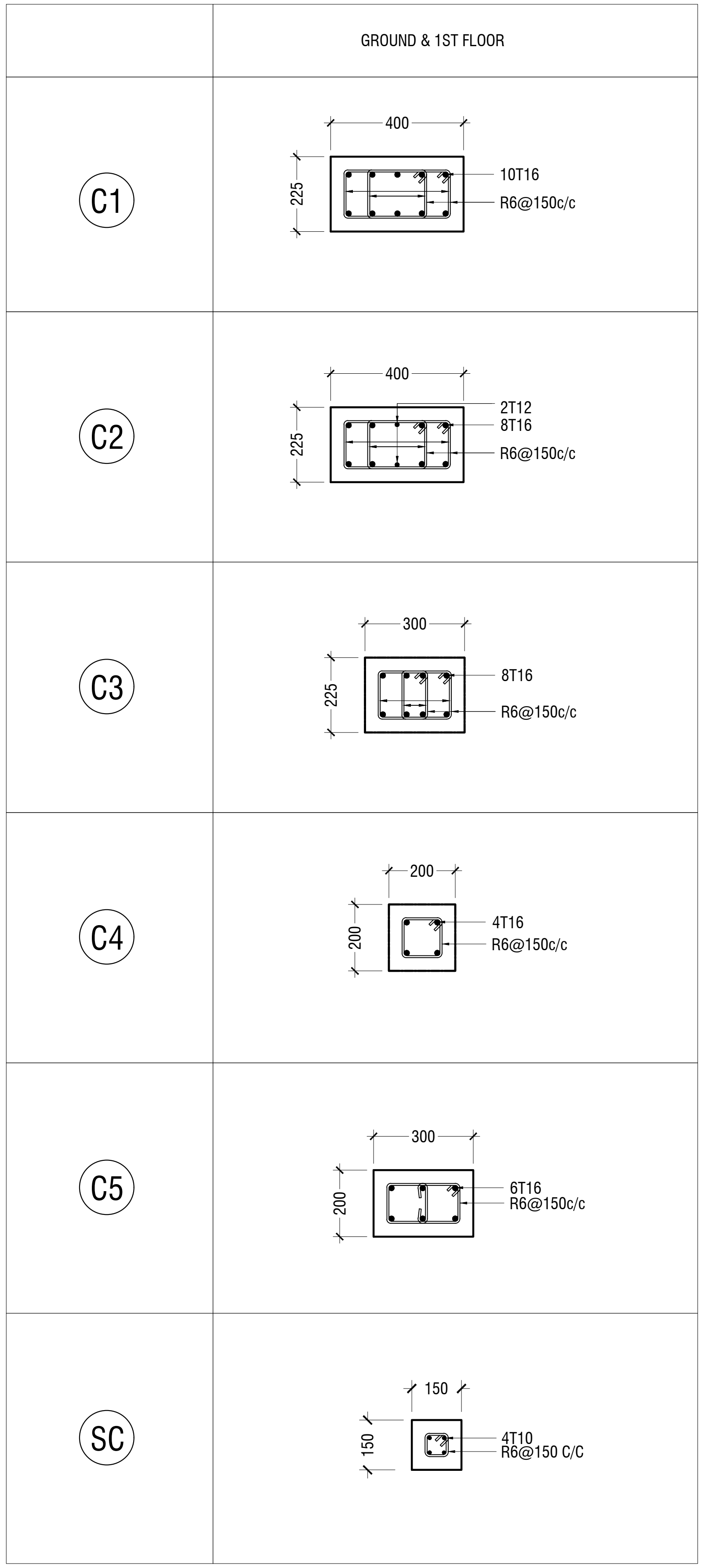
GROUND & 1ST FLOOR
C1
400
225
10T16
R6@150c/c
C2
400
225
2T12
8T16
R6@150c/c
C3
300
225
8T16
R6@150c/c
C4
200
200
4T16
R6@150c/c
C5
300
200
6T16
R6@150c/c
SC
150
150
4T10
R6@150 C/C

COLUMN DETAIL

STRUCTURAL DETAILS - 1

SCALE 1:20
0 0.1 0.2 0.4 0.6 0.8 1

M.Mulaku School (3 story)
Client: Ministry of Education

Project Number: RI/2020/006
Date: June 2021
Architect : Mariyam Irasha Shareef
Engineer : Mohamed Muththalib Waleed
Drawn by : Mariyam Leevan Jaleel
Services : Aishath Ahmed
Interior : -

Rev no	Date
--	----------
--	----------
--	----------
--	----------

RIYAN PRIVATE LIMITED
t : +9603315049 f : +9603310776
e : info@riyan.com.mv
w : www.riyan.com.mv
3rd floor, H. Azum, Ameeneemagu, Male'

Title: Structural Details 1

Page: S-11/13

The contents of these drawings remain as a property of Riyan Private Limited. Any use other that those expressly stated is a violation of this copyright

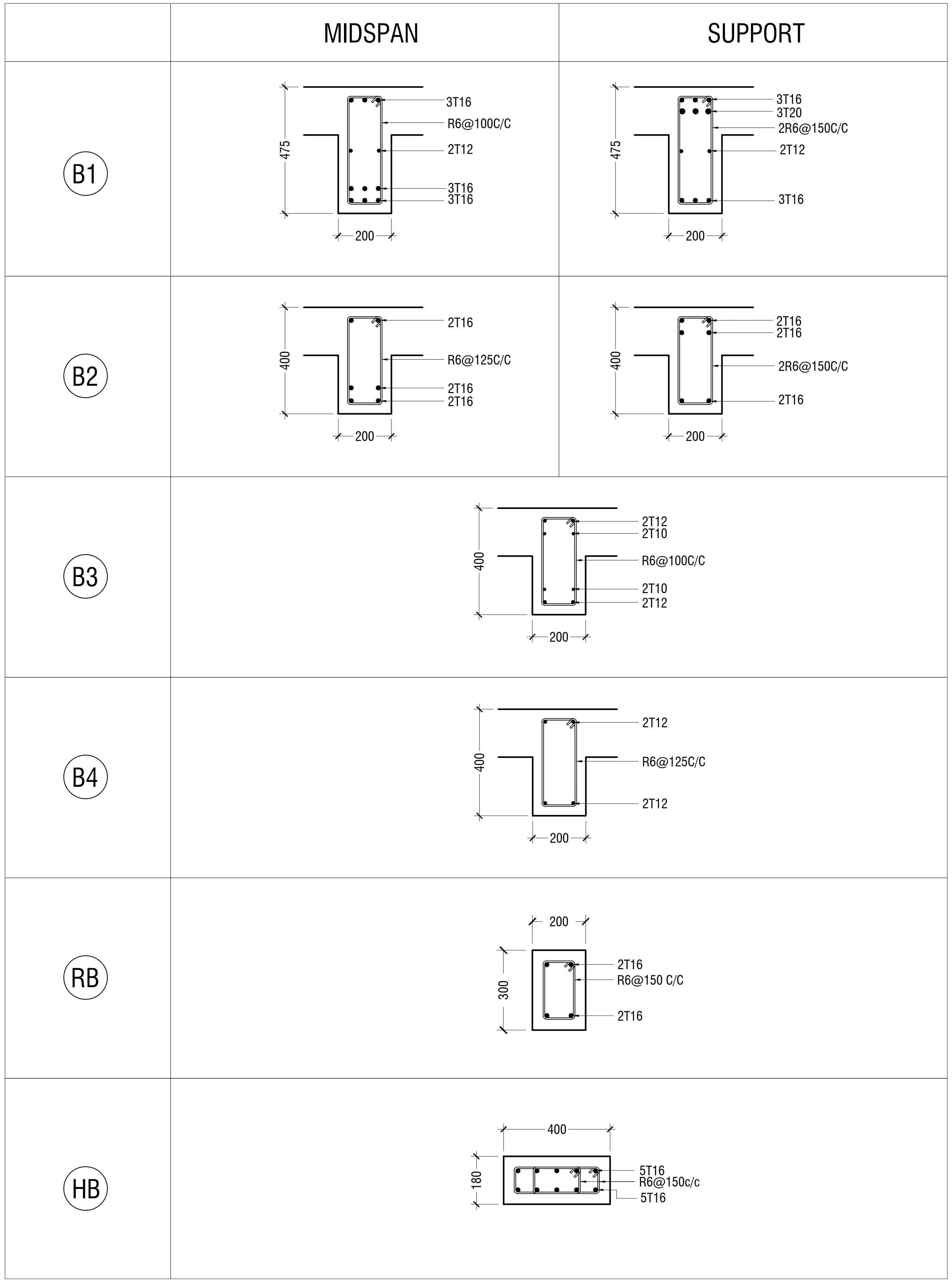
MIDSPAN
SUPPORT
B1
475
200
3T16
R6@100C/C
2T12
3T16
3T16
475
200
3T16
3T20
2R6@150C/C
2T12
3T16
B2
400
200
2T16
R6@125C/C
2T16
2T16
400
200
2T16
2T16
2R6@150C/C
2T16
B3
400
200
2T12
2T10
R6@100C/C
2T10
2T12
B4
400
200
2T12
R6@125C/C
2T12
RB
200
300
2T16
R6@150 C/C
2T16
HB
400
180
5T16
R6@150c/c
5T16

BEAM DETAIL

NOTE:
PROVIDE 25MM SPACER BAR @ 2000 C/C BETWEEN TWO LAYERS OF BEAM REINFORCEMENT

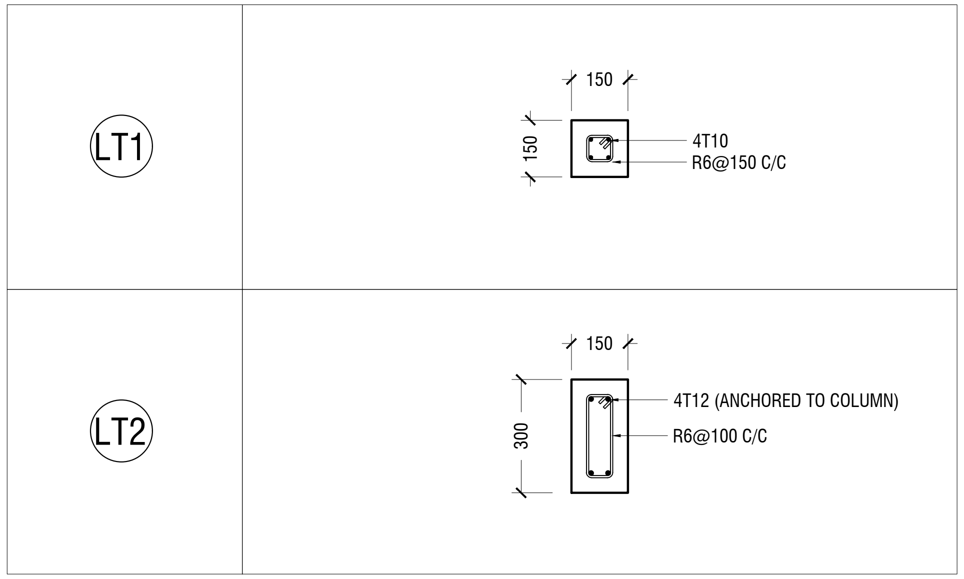
LT1
150
150
4T10
R6@150 C/C
LT2
150
300
4T12 (ANCHORED TO COLUMN)
R6@100 C/C

LINTELS OVER ALL DOORS, WINDOWS
(THAT DOES NOT RISE TO ROOF BEAM LEVEL)
LT2 FOR WINDOW (W2) ONLY

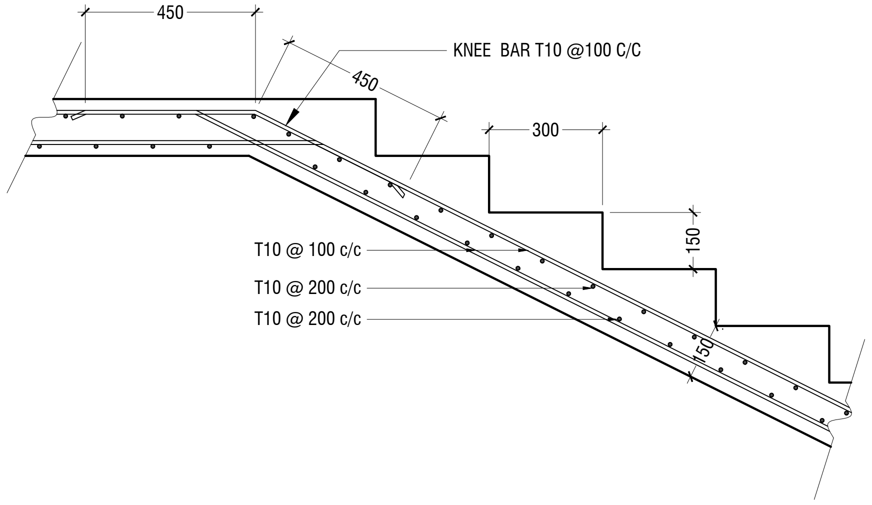
450
450
KNEE BAR T10 @100 C/C
300
150
150
T10 @ 100 c/c
T10 @ 200 c/c
T10 @ 200 c/c

MAIN STAIRCASE REINFORCEMENT DETAIL

STRUCTURAL DETAILS - 2

SCALE 1:20
0 0.1 0.2 0.4 0.6 0.8 1

M.Mulaku School (3 story)
Client: Ministry of Education

Project Number: RI/2020/006
Date: June 2021
Architect : Mariyam Irasha Shareef
Engineer : Mohamed Muththalib Waleed
Drawn by : Mariyam Leevan Jaleel
Services : Aishath Ahmed
Interior : -

Rev no	Date
--	----------
--	----------
--	----------
--	----------

RIYAN PRIVATE LIMITED

t : +9603315049 f : +9603310776
e : info@riyan.com.mv
w : www.riyan.com.mv
3rd floor, H. Azum, Ameeneemagu, Male'

Title: Structural Details 2

The contents of these drawings remain as a property of Riyan Private Limited. Any use other that those expressly stated is a violation of this copyright

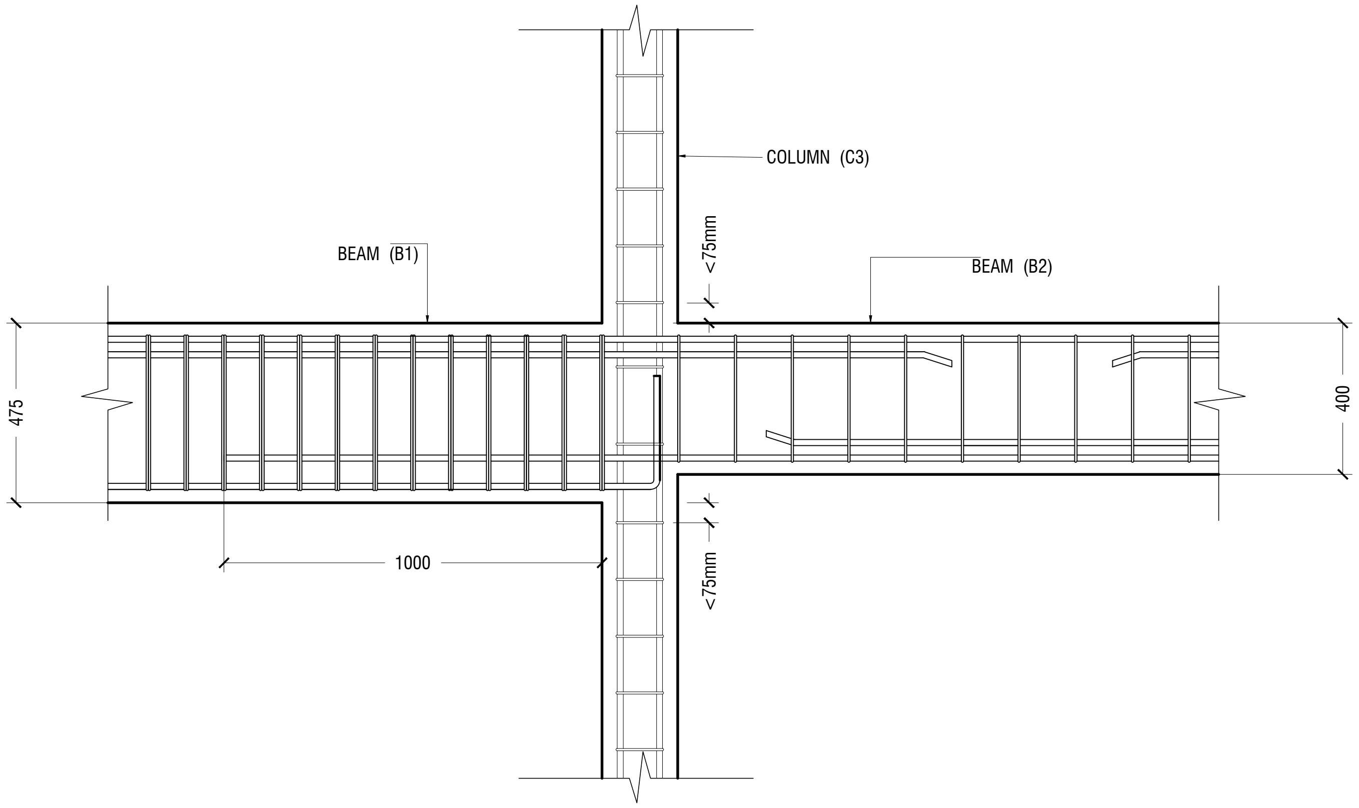

B1 TO B2 CONNECTION DETAIL

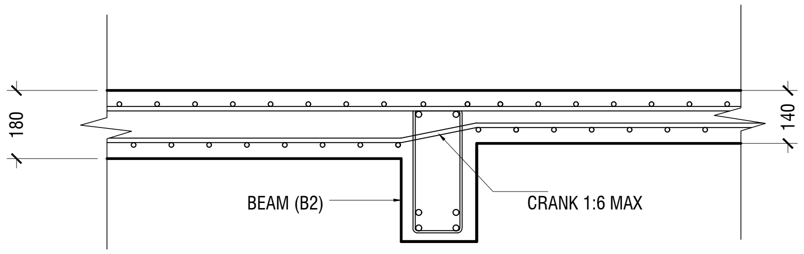

SLAB THICKNESS REDUCTION DETAIL

STRUCTURAL DETAILS - 3

SCALE 1:20

0 0.1 0.2 0.4 0.6 0.8 1

M.Mulaku School (3 story)
Client: Ministry of Education

Project Number: RI/2020/006
Date: June 2021
Architect : Mariyam Irasha Shareef
Engineer : Mohamed Muththalib Waleed
Drawn by : Mariyam Leevan Jaleel
Services : Aishath Ahmed
Interior : -

Rev no	Date
--	----------
--	----------
--	----------
--	----------

RIYAN PRIVATE LIMITED

t : +9603315049 f : +9603310776
e : info@riyan.com.mv
w : www.riyan.com.mv
3rd floor, H. Azum, Ameeneemagu, Male'

Title: Structural Details 3

The contents of these drawings remain as a property of Riyan Private Limited. Any use other that those expressly stated is a violation of this copyright

Proposed Office block, Staff room, AV room, Science lab & 4 Classroom at M.Mulaku School

(03 Storey)

SERVICES DRAWINGS

Client: Ministry of Education

RIYAN PRIVATE LIMITED

t : +9603315049 f : +9603310776
e : info@riyan.com.mv
w : www.riyan.com.mv
3rd floor, H. Azum, Ameeneemagu, Male'

The contents of these drawings remain as a property of Riyan Private Limited. Any use other that those expressly stated is a violation of this copyright

TABLE OF CONTENTS

DRAWING No.	TITLE	REVISION No.	DATE	REMARKS
SERVICES		---	---	---
DR - 01 /04	GROUND FLOOR DRAINAGE LAYOUT	---	---	---
DR - 02 /04	FIRST FLOOR DRAINAGE LAYOUT	---	---	---
DR - 03 /04	SECOND FLOOR DRAINAGE LAYOUT	---	---	---
DR - 04 /04	ROOF DRAINAGE LAYOUT	---	---	---
PL - 01 / 03	GROUND FLOOR PLUMBING LAYOUT	---	---	---
PL - 02 / 03	FIRST FLOOR PLUMBING LAYOUT	---	---	---
PL - 03 / 03	SECOND FLOOR PLUMBING LAYOUT	---	---	---
EL - 01 / 03	GROUND FLOOR LIGHTING LAYOUT	---	---	---
EL - 02 / 03	FIRST FLOOR LIGHTING LAYOUT	---	---	---
EL - 03 / 03	SECOND FLOOR LIGHTING LAYOUT	---	---	---
EP - 01 / 03	GROUND FLOOR POWER LAYOUT	---	---	---
EP - 02 / 03	FIRST FLOOR POWER LAYOUT	---	---	---
EP - 03 / 03	SECOND FLOOR POWER LAYOUT	---	---	---
FDP - 01 / 03	GROUND FLOOR FDP LAYOUT	---	---	---
FDP - 02 / 03	FIRST FLOOR FDP LAYOUT	---	---	---
FDP - 03 / 03	SECOND FLOOR FDP LAYOUT	---	---	---
ACV - 01 / 02	GROUND FLOOR ACV LAYOUT	---	---	---
ACV - 02 / 02	FIRST FLOOR ACV LAYOUT	---	---	---
DETAIL - 01 / 01	GROUND WELL DETAIL	---	---	---

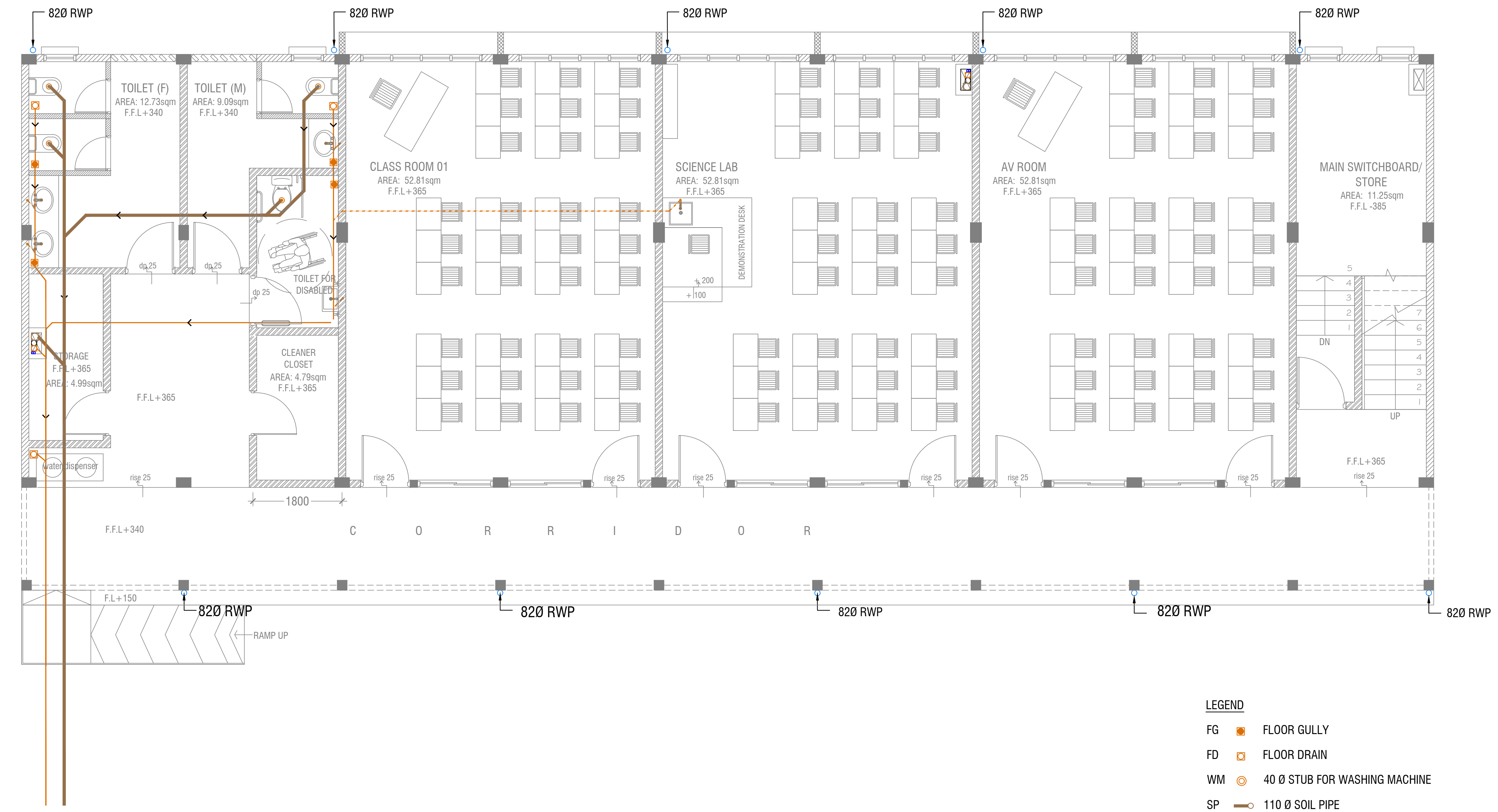
82Ø RWP
82Ø RWP
82Ø RWP
82Ø RWP
82Ø RWP
TOILET (F)
AREA: 12.73sqm
F.F.L+340
TOILET (M)
AREA: 9.09sqm
F.F.L+340
CLASS ROOM 01
AREA: 52.81sqm
F.F.L+365
SCIENCE LAB
AREA: 52.81sqm
F.F.L+365
DEMONSTRATION DESK
+200
+100
AV ROOM
AREA: 52.81sqm
F.F.L+365
MAIN SWITCHBOARD/
STORE
AREA: 11.25sqm
F.F.L -385
dp 25
dp 25
dp 25
TOILET FOR
DISABLED
STORAGE
F.F.L+365
AREA: 4.99sqm
F.F.L+365
CLEANER
CLOSET
AREA: 4.79sqm
F.F.L+365
water dispenser
DN
UP
5
4
3
2
1
7
6
5
4
3
2
1
F.F.L+365
rise 25
rise 25
rise 25
rise 25
rise 25
rise 25
rise 25
rise 25
1800
F.F.L+340
C O R R I D O R
F.L+150
RAMP UP
82Ø RWP
82Ø RWP
82Ø RWP
82Ø RWP
82Ø RWP

CONNECTED TO EXISTING SEWER NETWORK

GROUND FLOOR DRAINAGE LAYOUT

SCALE 1:100

0 0.5 1 2 3 4 5

LEGEND

FG	▣	FLOOR GULLY
FD	▣	FLOOR DRAIN
WM	◎	40 Ø STUB FOR WASHING MACHINE
SP	—○	110 Ø SOIL PIPE
SVP	○	110 Ø SOIL VENT PIPE
WP	—○	82 Ø WASTE PIPE
WVP	○	82 Ø WASTE VENT PIPE
WP	—○	40 Ø WASTE PIPE
RWP	—○	82/50 Ø RAINWATER PIPE
RWO	◉	82/50 Ø DRAIN OUTLET
CD	—	25 Ø DRAIN PIPE
MHVP	—○	50 Ø MANHOLE VENT PIPE

NOTE:
- ALL RAINWATER PIPES TO BE AT GROUND LEVEL DISCHARGED THROUGH A PERFORATED COWL OR TO A SOAK PIT
- ALL SOIL AND WASTE PIPES TO BE AT GROUND LEVEL, UNDER THE SLAB.

Date
Rev no
--

M.Mulaku School
Client: Ministry of Education

Project Number: RI/2020/006
Date: March 2021
Architect : Mariyam Irasha Shareef
Engineer : Mohamed Muththalib Waleed
Drawn by : Mariyam Leevan Jaleel
Services : Aishath Ahmed
Interior :

RIYAN PRIVATE LIMIT

t : +9603315049 f : +960331077
e : info@riyan.com.mv
w : www.riyan.com.mv
3rd floor, H. Azum, Ameeneemagu,

Title: Ground Floor
Drainage Layout

Page: DR 01-/04

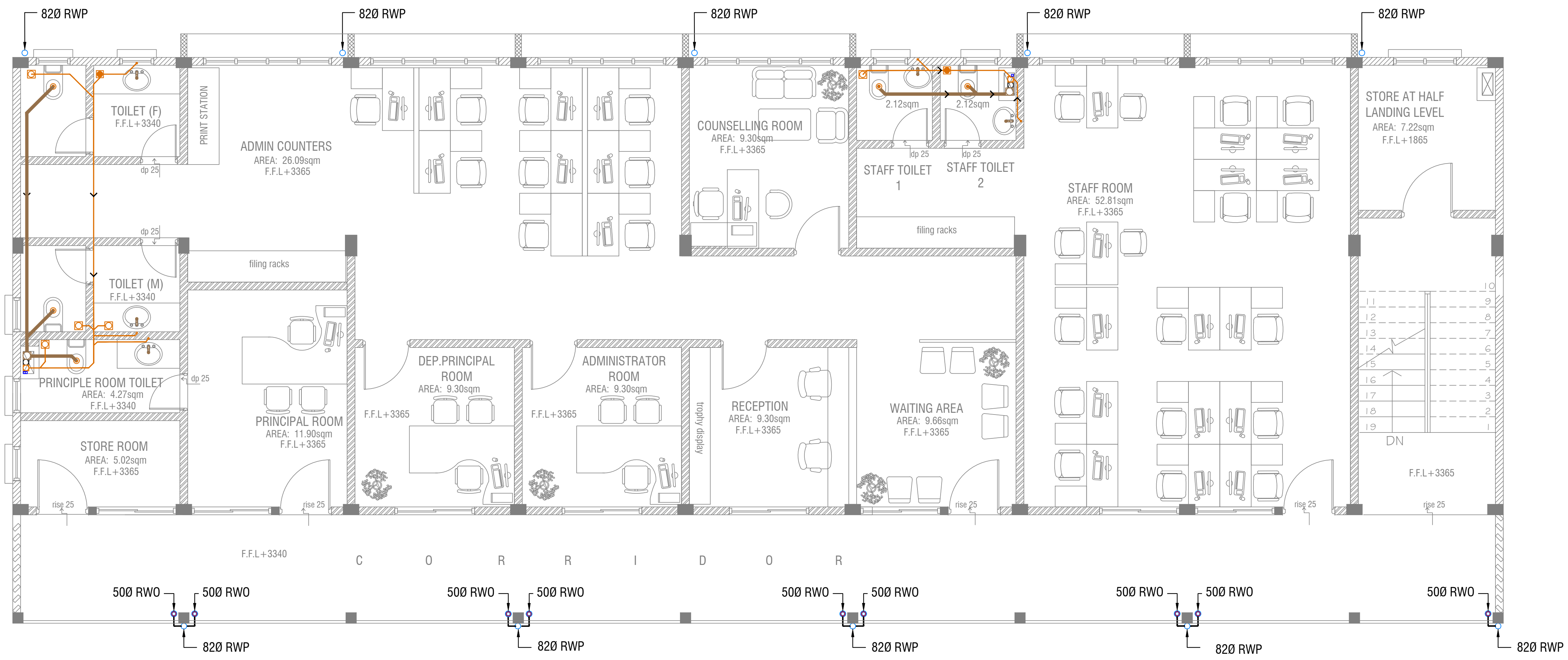
82Ø RWP
82Ø RWP
82Ø RWP
82Ø RWP
82Ø RWP
TOILET (F)
F.F.L+3340
dp 25
PRINT STATION
ADMIN COUNTERS
AREA: 26.09sqm
F.F.L+3365
COUNSELLING ROOM
AREA: 9.30sqm
F.F.L+3365
2.12sqm
2.12sqm
dp 25
dp 25
STAFF TOILET 1
STAFF TOILET 2
filing racks
STAFF ROOM
AREA: 52.81sqm
F.F.L+3365
STORE AT HALF LANDING LEVEL
AREA: 7.22sqm
F.F.L+1865
dp 25
TOILET (M)
F.F.L+3340
filing racks
PRINCIPLE ROOM TOILET
AREA: 4.27sqm
F.F.L+3340
dp 25
PRINCIPAL ROOM
AREA: 11.90sqm
F.F.L+3365
DEP.PRINCIPAL ROOM
AREA: 9.30sqm
F.F.L+3365
ADMINISTRATOR ROOM
AREA: 9.30sqm
F.F.L+3365
tophy display
RECEPTION
AREA: 9.30sqm
F.F.L+3365
WAITING AREA
AREA: 9.66sqm
F.F.L+3365
DN
F.F.L+3365
STORE ROOM
AREA: 5.02sqm
F.F.L+3365
rise 25
rise 25
rise 25
rise 25
rise 25
F.F.L+3340
CORRIDOR
50Ø RWO
50Ø RWO
50Ø RWO
50Ø RWO
50Ø RWO
50Ø RWO
50Ø RWO
50Ø RWO
50Ø RWO
82Ø RWP
82Ø RWP
82Ø RWP
82Ø RWP
82Ø RWP

FIRST FLOOR DRAINAGE LAYOUT

SCALE 1:100

0 0.5 1 2 3 4 5

LEGEND

FG	▣	FLOOR GULLY
FD	▢	FLOOR DRAIN
WM	◎	40 Ø STUB FOR WASHING MACHINE
SP	—○	110 Ø SOIL PIPE
SVP	○	110 Ø SOIL VENT PIPE
WP	—○	82 Ø WASTE PIPE
WVP	○	82 Ø WASTE VENT PIPE
WP	—○	40 Ø WASTE PIPE
RWP	—○	82/50 Ø RAINWATER PIPE
RWO	●	82/50 Ø DRAIN OUTLET
CD	—	25 Ø DRAIN PIPE
MHVP	—○	50 Ø MANHOLE VENT PIPE

NOTE:

- ALL SOIL AND WASTE PIPES TO BE UNDER THE SLAB LEVEL.

M.Mulaku School
Client: Ministry of Education

Project Number: RI/2020/006
Date: March 2021
Architect : Mariyam Irasha Shareef
Engineer : Mohamed Muththalib Waleed
Drawn by : Mariyam Leevan Jaleel
Services : Aishath Ahmed

Rev no	Date
--	----------
--	----------

RIYAN PRIVATE LIMIT
t : +9603315049 f : +960331077
e : info@riyan.com.mv
w : www.riyan.com.mv
3rd floor, H. Azum, Ameeneemagu,

Title: First Floor
Drainage Layout

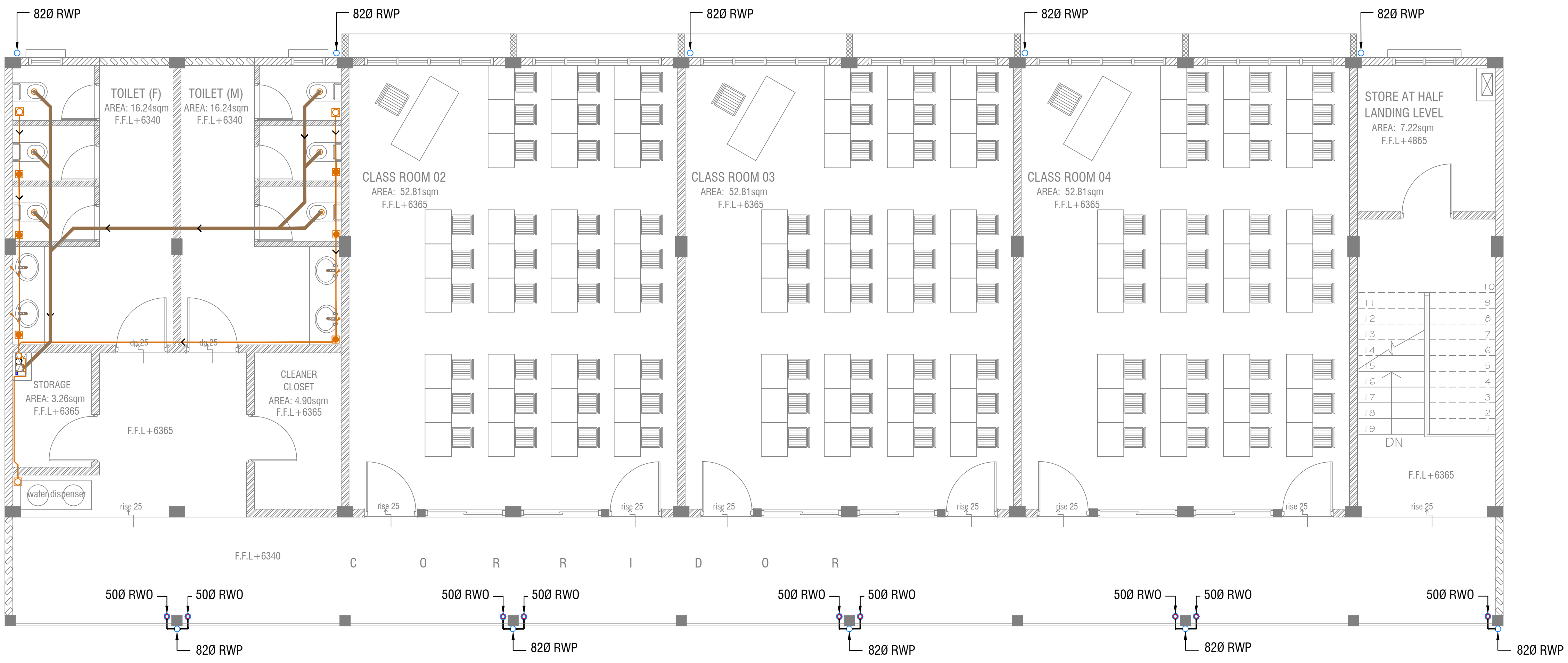
82Ø RWP
TOILET (F)
AREA: 16.24sqm
F.F.L+6340
TOILET (M)
AREA: 16.24sqm
F.F.L+6340
CLASS ROOM 02
AREA: 52.81sqm
F.F.L+6365
CLASS ROOM 03
AREA: 52.81sqm
F.F.L+6365
CLASS ROOM 04
AREA: 52.81sqm
F.F.L+6365
STORE AT HALF
LANDING LEVEL
AREA: 7.22sqm
F.F.L+4865
STORAGE
AREA: 3.26sqm
F.F.L+6365
CLEANER
CLOSET
AREA: 4.90sqm
F.F.L+6365
F.F.L+6365
water dispenser
DN
rise 25
F.F.L+6340
CORRIDOR
50Ø RWO
82Ø RWP

SECOND FLOOR DRAINAGE LAYOUT

SCALE 1:100

0 0.5 1 2 3 4 5

LEGEND

FG	▣	FLOOR GULLY
FD	▢	FLOOR DRAIN
WM	◎	40 Ø STUB FOR WASHING MACHINE
SP	—○	110 Ø SOIL PIPE
SVP	○	110 Ø SOIL VENT PIPE
WP	—○	82 Ø WASTE PIPE
WVP	○	82 Ø WASTE VENT PIPE
WP	—○	40 Ø WASTE PIPE
RWP	—○	82/50 Ø RAINWATER PIPE
RWO	○	82/50 Ø DRAIN OUTLET
CD	—	25 Ø DRAIN PIPE
MHVP	—○	50 Ø MANHOLE VENT PIPE

NOTE:

- ALL SOIL AND WASTE PIPES TO BE UNDER THE SLAB LEVEL.

M.Mulaku School
Client: Ministry of Education

Project Number: RI/2020/006
Date: March 2021
Architect : Mariyam Irasha Shareef
Engineer : Mohamed Muththalib Waleed
Drawn by : Mariyam Leevan Jaleel
Services : Aishath Ahmed

Rev no	Date
--	--------
--	--------

RIYAN PRIVATE LIMI
t : +9603315049 f : +960331077
e : info@riyan.com.mv
w : www.riyan.com.mv
3rd floor, H. Azum, Ameeneemagu,

Title: Second Floor
Drainage Layout

Page: DD 02 /04

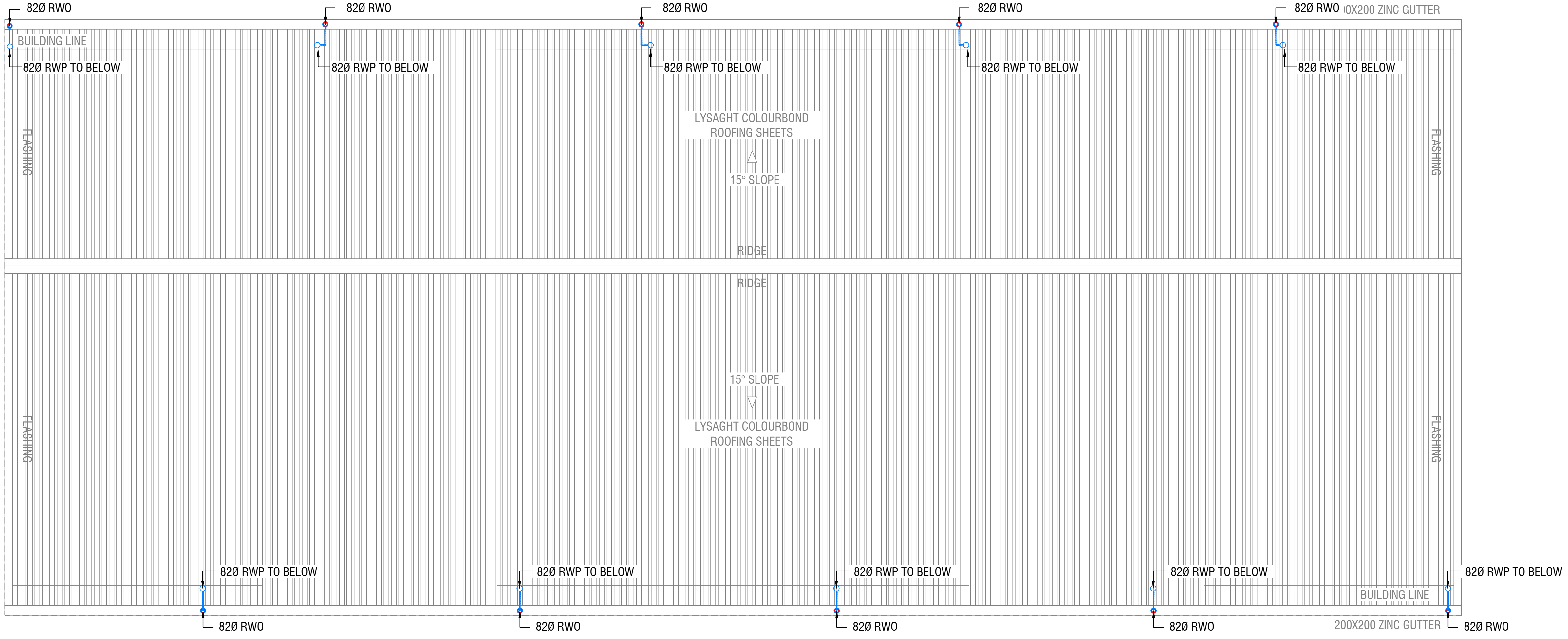
82Ø RWO
82Ø RWO
82Ø RWO
82Ø RWO
82Ø RWO
0X200 ZINC GUTTER
BUILDING LINE
82Ø RWP TO BELOW
82Ø RWP TO BELOW
82Ø RWP TO BELOW
82Ø RWP TO BELOW
82Ø RWP TO BELOW
LYSAGHT COLOURBOND
ROOFING SHEETS
15° SLOPE
FLASHING
FLASHING
RIDGE
RIDGE
15° SLOPE
LYSAGHT COLOURBOND
ROOFING SHEETS
FLASHING
FLASHING
82Ø RWP TO BELOW
82Ø RWP TO BELOW
82Ø RWP TO BELOW
82Ø RWP TO BELOW
82Ø RWP TO BELOW
BUILDING LINE
82Ø RWO
82Ø RWO
82Ø RWO
82Ø RWO
200X200 ZINC GUTTER
82Ø RWO

ROOF DRAINAGE LAYOUT

SCALE 1:100

0 0.5 1 2 3 4 5

LEGEND

FG	▣	FLOOR GULLY
FD	▢	FLOOR DRAIN
WM	◎	40 Ø STUB FOR WASHING MACHINE
SP	—○	110 Ø SOIL PIPE
SVP	○	110 Ø SOIL VENT PIPE
WP	—○	82 Ø WASTE PIPE
WVP	○	82 Ø WASTE VENT PIPE
WP	—○	40 Ø WASTE PIPE
RWP	—○	82/50 Ø RAINWATER PIPE
RWO	●	82/50 Ø DRAIN OUTLET
CD	—	25 Ø DRAIN PIPE
MHVP	—○	50 Ø MANHOLE VENT PIPE

M.Mulaku School
Client: Ministry of Education

Project Number: RI/2020/006
Date: March 2021
Architect : Mariyam Irasha Shareef
Engineer : Mohamed Muththalib Waleed
Drawn by : Mariyam Leevan Jaleel
Services : Aishath Ahmed
Interior : -

Rev no	Date
--	-------------
--	-------------
--	-------------
--	-------------

RIYAN PRIVATE LIMITED

t : +9603315049 f : +9603310776
e : info@riyan.com.mv
w : www.riyan.com.mv
3rd floor, H. Azum, Ameeneemagu, Male'

Title: Roof
Drainage Layout

Page: DR 04-/04

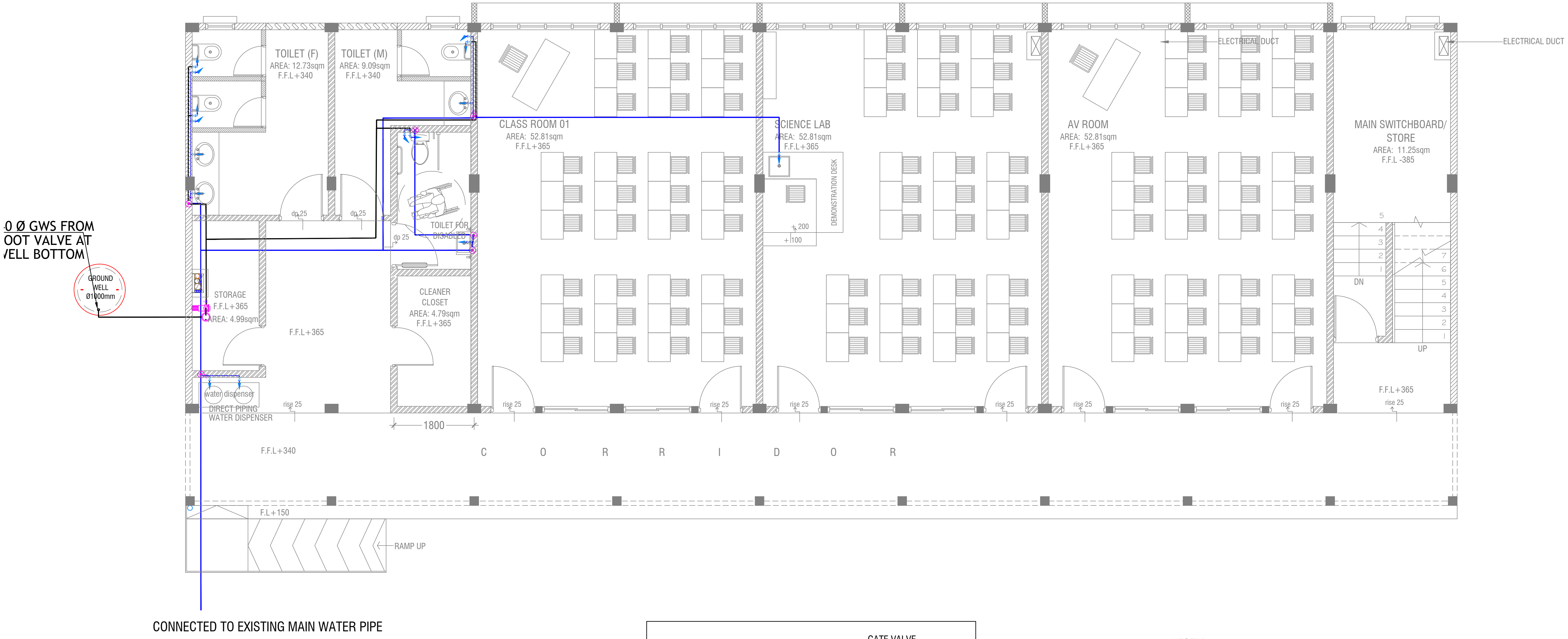
0 Ø GWS FROM
OOT VALVE AT
VELL BOTTOM
GROUND WELL Ø1000mm
TOILET (F)
AREA: 12.73sqm
F.F.L+340
TOILET (M)
AREA: 9.09sqm
F.F.L+340
CLASS ROOM 01
AREA: 52.81sqm
F.F.L+365
SCIENCE LAB
AREA: 52.81sqm
F.F.L+365
DEMONSTRATION DESK
200
100
AV ROOM
AREA: 52.81sqm
F.F.L+365
ELECTRICAL DUCT
ELECTRICAL DUCT
MAIN SWITCHBOARD/ STORE
AREA: 11.25sqm
F.F.L -385
DN
UP
F.F.L+365
dp 25
dp 25
dp 25
TOILET FOR DISABLED
STORAGE
F.F.L+365
AREA: 4.99sqm
CLEANER CLOSET
AREA: 4.79sqm
F.F.L+365
F.F.L+365
water dispenser
DIRECT PIPING WATER DISPENSER
rise 25
1800
F.F.L+340
C O R R I D O R
F.L+150
RAMP UP
CONNECTED TO EXISTING MAIN WATER PIPE

GROUND FLOOR PLUMBING LAYOUT

SCALE 1:100

0 0.5 1 2 3 4 5

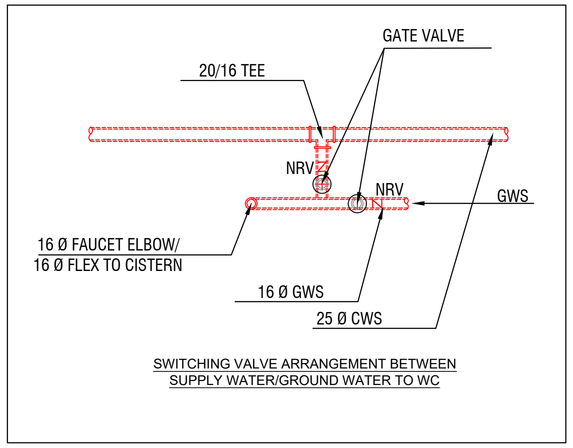
GATE VALVE
20/16 TEE
NRV
NRV
GWS
16 Ø FAUCET ELBOW/
16 Ø FLEX TO CISTERN
16 Ø GWS
25 Ø CWS

SWITCHING VALVE ARRANGEMENT BETWEEN SUPPLY WATER/GROUND WATER TO WC

LEGEND

↑	16 Ø COLD WATER SUPPLY TO CISTERN
↗	16 Ø COLD WATER SUPPLY TO BIDET SHOWER
→	16 Ø COLD WATER SUPPLY TO BASIN FAUCET / SINK
⊠ GV	GATE VALVE
—	25 Ø COLD WATER SUPPLY PIPES RUN UNDERGROUND
—○	25 Ø COLD WATER SUPPLY PIPES RUN IN WALL / UNDER FALSE CEILING
⊙	RISE IN WALL
⊗	DROP IN WALL
CWS	COLD WATER SUPPLY
HWS	HOT WATER SUPPLY
—	GROUND WATER SUPPLY

NOTE:
- THE WELL SHALL BE RELOCATED ACCORDING TO THE SALINITY OF THE GROUND WATER.

- BASED ON WELL LOCATION PUMP CAPACITY TO BE DECIDED

Rev no	Date
-	-
-	-
-	-
-	-

M.Mulaku School
Client: Ministry of Education

Project Number: RI/2020/006
Date: March 2021
Architect : Mariyam Irasha Shareef
Engineer : Mohamed Muththalib Waleed
Drawn by : Mariyam Leevan Jaleel
Services : Aishath Ahmed
Interior : -

RIYAN PRIVATE LIMITED

t : +9603315049 f : +9603310776
e : info@riyan.com.mv
w : www.riyan.com.mv
3rd floor, H. Azum, Ameeneemagu, Male'

Title: Ground Floor Plumbing Layout

Page: PL 01-/03

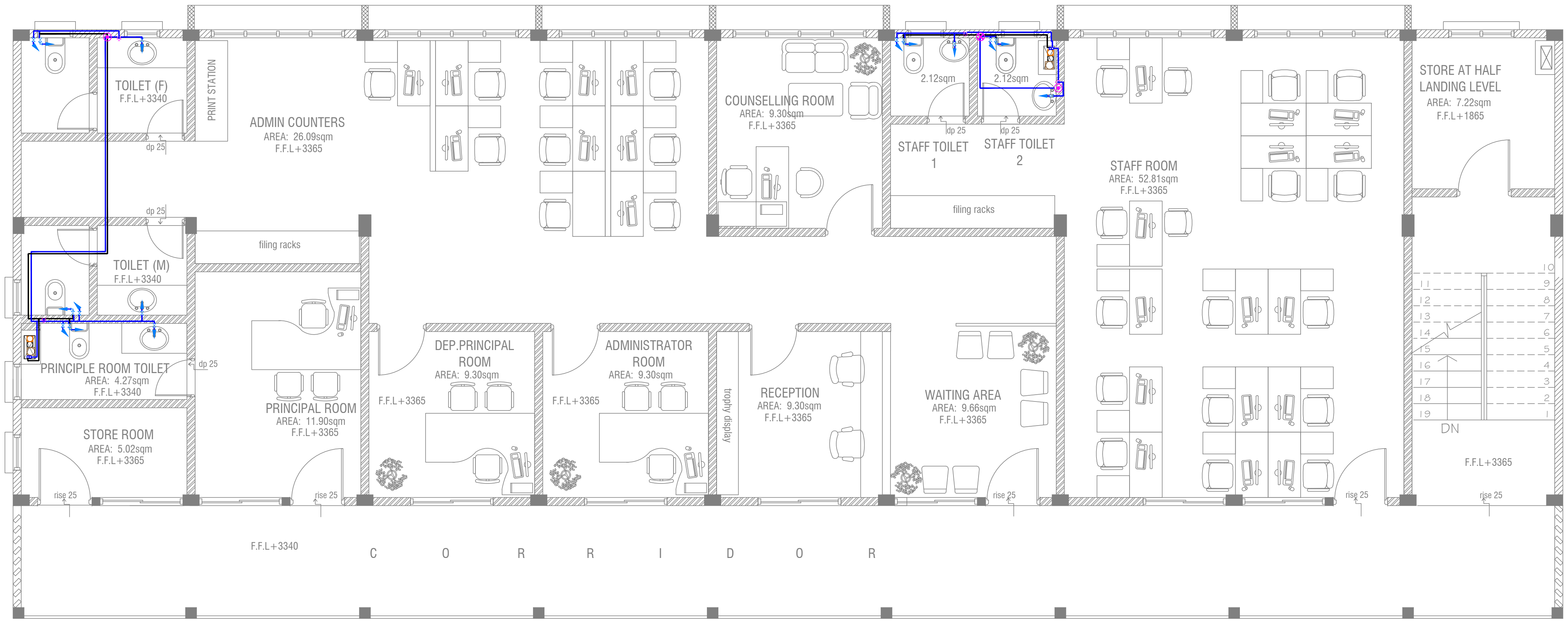
TOILET (F)
F.F.L+3340
dp 25
PRINT STATION
ADMIN COUNTERS
AREA: 26.09sqm
F.F.L+3365
COUNSELLING ROOM
AREA: 9.30sqm
F.F.L+3365
2.12sqm
2.12sqm
dp 25
dp 25
STAFF TOILET
1
STAFF TOILET
2
filing racks
STAFF ROOM
AREA: 52.81sqm
F.F.L+3365
STORE AT HALF
LANDING LEVEL
AREA: 7.22sqm
F.F.L+1865
dp 25
filing racks
TOILET (M)
F.F.L+3340
dp 25
PRINCIPLE ROOM TOILET
AREA: 4.27sqm
F.F.L+3340
PRINCIPAL ROOM
AREA: 11.90sqm
F.F.L+3365
DEP.PRINCIPAL
ROOM
AREA: 9.30sqm
F.F.L+3365
ADMINISTRATOR
ROOM
AREA: 9.30sqm
F.F.L+3365
trophy display
RECEPTION
AREA: 9.30sqm
F.F.L+3365
WAITING AREA
AREA: 9.66sqm
F.F.L+3365
STORE ROOM
AREA: 5.02sqm
F.F.L+3365
10 9 8 7 6 5 4 3 2 1
11 12 13 14 15 16 17 18 19
DN
F.F.L+3365
rise 25
rise 25
rise 25
rise 25
rise 25
F.F.L+3340
C O R R I D O R

LEGEND

↑	16 Ø COLD WATER SUPPLY TO CISTERN
↗	16 Ø COLD WATER SUPPLY TO BIDET SHOWER
→	16 Ø COLD WATER SUPPLY TO BASIN FAUCET / SINK
⋈ GV	GATE VALVE
—	25 Ø COLD WATER SUPPLY PIPES RUN UNDERGROUND
—○	25 Ø COLD WATER SUPPLY PIPES RUN IN WALL / UNDER FALSE CEILING
⊙	RISE IN WALL
⊗	DROP IN WALL
CWS	COLD WATER SUPPLY
HWS	HOT WATER SUPPLY
—	GROUND WATER SUPPLY

FIRST FLOOR PLUMBING LAYOUT

SCALE 1:100

0 0.5 1 2 3 4 5

M.Mulaku School
Client: Ministry of Education

Project Number: RI/2020/006
Date: March 2021
Architect : Mariyam Irasha Shareef
Engineer : Mohamed Muththalib Waleed
Drawn by : Mariyam Leevan Jaleel
Services : Aishath Ahmed
Interior : -

Rev no	Date
-	----------
-	----------
-	----------
-	----------

RIYAN PRIVATE LIMITED

t : +9603315049 f : +9603310776
e : info@riyan.com.mv
w : www.riyan.com.mv
3rd floor, H. Azum, Ameeneemagu, Male'

Title: First Floor
Plumbing Layout

Page: PL 02-/03

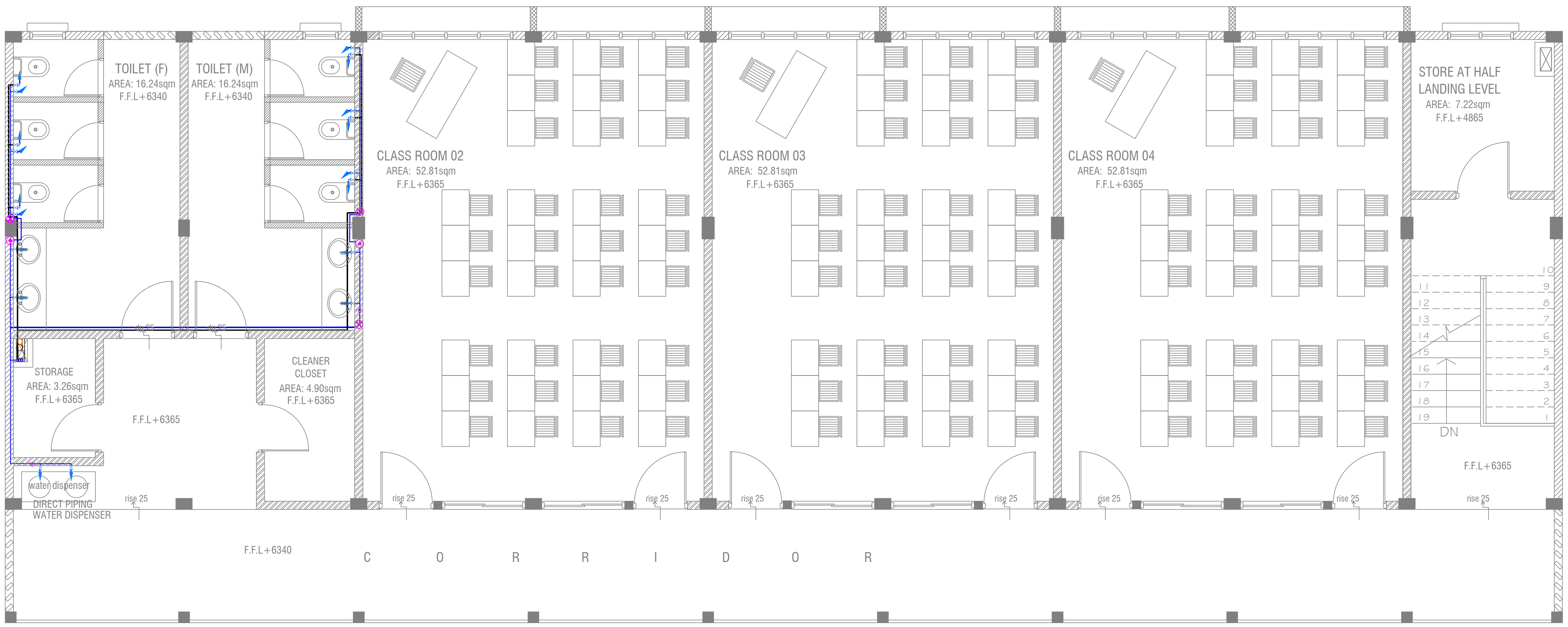
TOILET (F)
AREA: 16.24sqm
F.F.L+6340
TOILET (M)
AREA: 16.24sqm
F.F.L+6340
CLASS ROOM 02
AREA: 52.81sqm
F.F.L+6365
CLASS ROOM 03
AREA: 52.81sqm
F.F.L+6365
CLASS ROOM 04
AREA: 52.81sqm
F.F.L+6365
STORE AT HALF
LANDING LEVEL
AREA: 7.22sqm
F.F.L+4865
STORAGE
AREA: 3.26sqm
F.F.L+6365
F.F.L+6365
CLEANER
CLOSET
AREA: 4.90sqm
F.F.L+6365
dp 25
dp 25
water dispenser
DIRECT PIPING
WATER DISPENSER
rise 25
rise 25
rise 25
rise 25
rise 25
rise 25
rise 25
rise 25
DN
F.F.L+6365
F.F.L+6340
C O R R I D O R

SECOND FLOOR PLUMBING LAYOUT

SCALE 1:100

0 0.5 1 2 3 4 5

LEGEND

↑	16 Ø COLD WATER SUPPLY TO CISTERN
↗	16 Ø COLD WATER SUPPLY TO BIDET SHOWER
→	16 Ø COLD WATER SUPPLY TO BASIN FAUCET / SINK
⋈ GV	GATE VALVE
—	25 Ø COLD WATER SUPPLY PIPES RUN UNDERGROUND
—○	25 Ø COLD WATER SUPPLY PIPES RUN IN WALL / UNDER FALSE CEILING
⊙	RISE IN WALL
⊗	DROP IN WALL
CWS	COLD WATER SUPPLY
HWS	HOT WATER SUPPLY
—	GROUND WATER SUPPLY

M.Mulaku School
Client: Ministry of Education

Project Number: RI/2020/006
Date: March 2021
Architect : Mariyam Irasha Shareef
Engineer : Mohamed Muththalib Waleed
Drawn by : Mariyam Leevan Jaleel
Services : Aishath Ahmed
Interior : -

Rev no	Date
--	----------
--	----------
--	----------
--	----------

RIYAN PRIVATE LIMITED
t : +9603315049 f : +9603310776
e : info@riyan.com.mv
w : www.riyan.com.mv
3rd floor, H. Azum, Ameeneemagu, Male'

Title: Second Floor
Plumbing Layout

Page: PL 03-/03

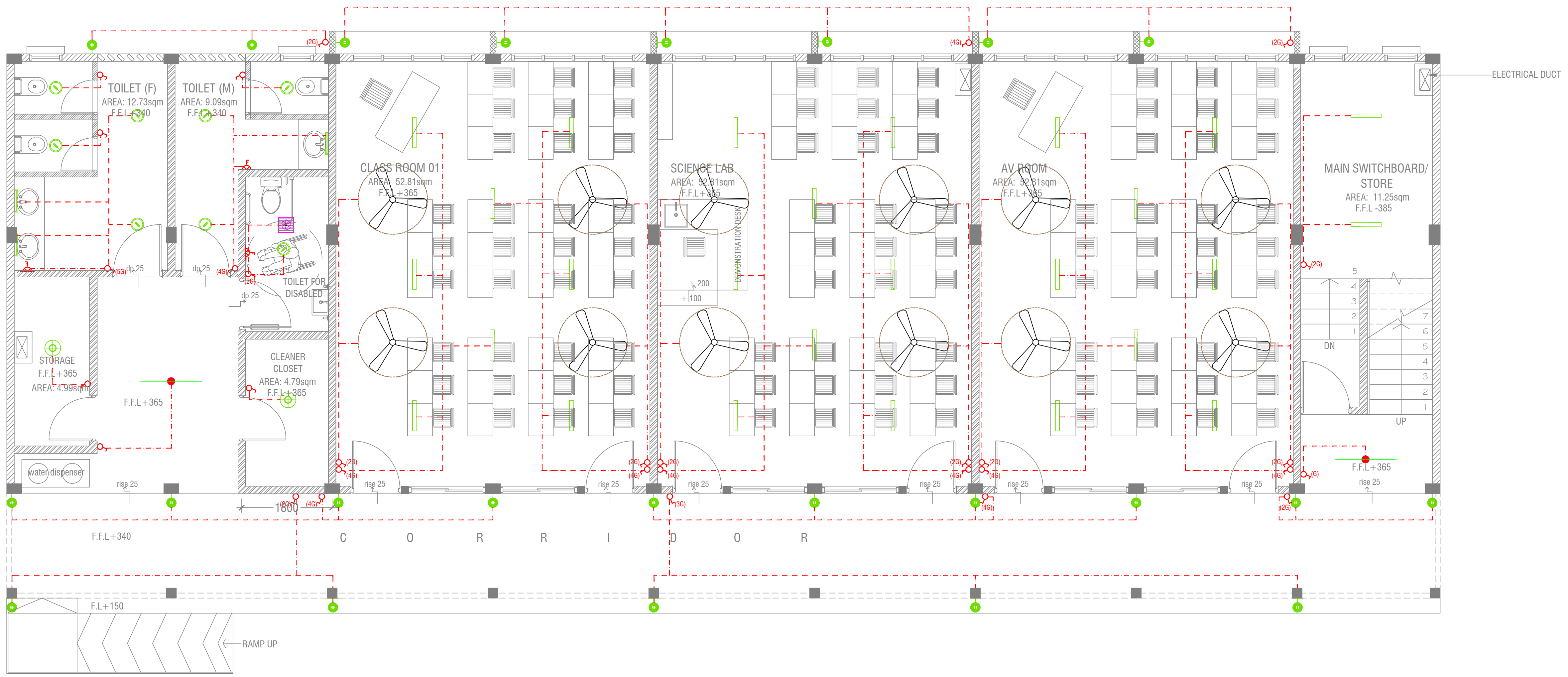
TOILET (F)
AREA: 12.73sqm
F.F.L+340
TOILET (M)
AREA: 9.09sqm
F.F.L+340
(5G)
(4G)
(2G)
dp 25
TOILET FOR DISABLED
STORAGE
F.F.L+365
AREA: 4.99sqm
F.F.L+365
CLEANER CLOSET
AREA: 4.79sqm
F.F.L+365
water dispenser
rise 25
1800
F.F.L+340
CLASS ROOM 01
AREA: 52.81sqm
F.F.L +365
SCIENCE LAB
AREA: 52.81sqm
F.F.L +365
DEMONSTRATION DESK
+200
+100
AV ROOM
AREA: 52.81sqm
F.F.L +365
MAIN SWITCHBOARD/ STORE
AREA: 11.25sqm
F.F.L -385
ELECTRICAL DUCT
DN
UP
(G)
F.F.L+365
C O R R I D O R
F.L+150
RAMP UP

GROUND FLOOR LIGHTING LAYOUT

SCALE 1:100

0 0.5 1 2 3 4 5

LEGEND

WPD	40W (IP 65) OUT DOOR WALL LIGHT
ML	MIRROR LIGHT (7W LED LIGHT)
H2	LED RECESSED DOWN LIGHT 12W
CL	LED CEILING LIGHT 18W
WP	LED TUBE LIGHT WITH WEATHER PROOF OPAL CASING
C2	LED CEILING DOWN LIGHT (18W)
	LIGHT SWITCH
	SWITCHING LINE
	EXHAUST FAN (CEILING MOUNTED)
F	FLEX OUTLET
CL2	LED TUBE LIGHT WITH OPAL CASING
	CEILING FAN (52" - 54")

NOTE:

- ALL WIRING TO BE OF STELCO APPROVED STANDARDS
- SWITCH CONTROL = 1200MM FROM FLOOR FIN. LEVEL
-ALL LIGHTING POINTS CONNECTED TO THEIR RESPECTIVE DB
- POLYCARBONATE ENCLOSURE TO ALL SWITCH AND SOCKET WHICH ARE LOCATED AT THE OUTDOORS

M.Mulaku School
Client: Ministry of Education

Project Number: RI/2020/006
Date: March 2021
Architect : Mariyam Irasha Shareef
Engineer : Mohamed Muththalib Waleed
Drawn by : Mariyam Leevan Jaleel
Services : Aishath Ahmed
Interior : -

Rev no	Date
--	----------
--	----------
--	----------
--	----------

RIYAN PRIVATE LIMITED
t : +9603315049 f : +9603310776
e : info@riyan.com.mv
w : www.riyan.com.mv
3rd floor, H. Azum, Ameeneemagu, Male'

Title: Ground Floor Lighting Layout
Page: EL 01-03

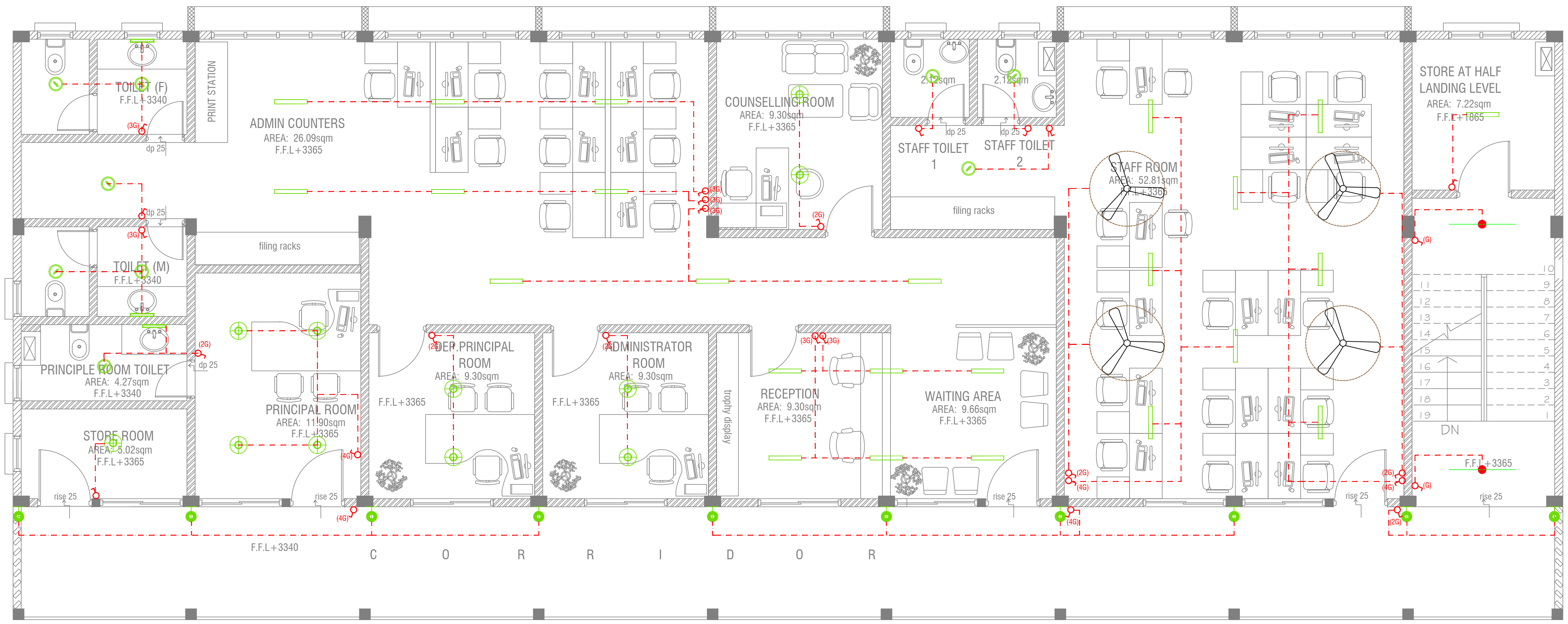
TOILET (F)
F.F.L+3340
(3G)
dp 25
PRINT STATION
ADMIN COUNTERS
AREA: 26.09sqm
F.F.L+3365
COUNSELLING ROOM
AREA: 9.30sqm
F.F.L+3365
(3G)
(3G)
(3G)
(2G)
2.12sqm
2.12sqm
dp 25
dp 25
STAFF TOILET 1
STAFF TOILET 2
filing racks
STAFF ROOM
AREA: 52.81sqm
F.F.L+3365
STORE AT HALF LANDING LEVEL
AREA: 7.22sqm
F.F.L+1865
(G)
10 9 8 7 6 5 4 3 2 1
11 12 13 14 15 16 17 18 19
DN
F.F.L+3365
(G)
dp 25
(3G)
TOILET (M)
F.F.L+3340
filing racks
(2G)
dp 25
PRINCIPLE ROOM TOILET
AREA: 4.27sqm
F.F.L+3340
STORE ROOM
AREA: 5.02sqm
F.F.L+3365
rise 25
PRINCIPAL ROOM
AREA: 11.90sqm
F.F.L+3365
(4G)
rise 25
(4G)
(2G)
DEP.PRINCIPAL ROOM
AREA: 9.30sqm
F.F.L+3365
(2G)
ADMINISTRATOR ROOM
AREA: 9.30sqm
F.F.L+3365
trophy display
(3G)
(3G)
RECEPTION
AREA: 9.30sqm
F.F.L+3365
WAITING AREA
AREA: 9.66sqm
F.F.L+3365
rise 25
(2G)
(4G)
(4G)
(2G)
(4G)
rise 25
(2G)
rise 25
F.F.L+3340
C O R R I D O R

FIRST FLOOR LIGHTING LAYOUT

SCALE 1:100

0 0.5 1 2 3 4 5

LEGEND

WPD	⊙	40W (IP 65) OUT DOOR WALL LIGHT
ML	▭	MIRROR LIGHT (7W LED LIGHT)
H2	⊘	LED RECESSED DOWN LIGHT 12W
CL	⊕	LED CEILING LIGHT 18W
WP	●	LED TUBE LIGHT WITH WEATHER PROOF OPAL CASING
C2	○	LED CEILING DOWN LIGHT (18W)
		LIGHT SWITCH
	- - - -	SWITCHING LINE
		FLEX OUTLET
CL2	▭	LED TUBE LIGHT WITH OPAL CASING
		CEILING FAN (52" - 54")

NOTE:

- ALL WIRING TO BE OF STELCO APPROVED STANDARDS
- SWITCH CONTROL = 1200MM FROM FLOOR FIN. LEVEL
-ALL LIGHTING POINTS CONNECTED TO THEIR RESPECTIVE DB
- POLYCARBONATE ENCLOSURE TO ALL SWITCH AND SOCKET WHICH ARE LOCATED AT THE OUTDOORS

M.Mulaku School
Client: Ministry of Education

Project Number: RI/2020/006
Date: March 2021
Architect : Mariyam Irasha Shareef
Engineer : Mohamed Muththalib Waleed
Drawn by : Mariyam Leevan Jaleel
Services : Aishath Ahmed
Interior : -

Rev no	Date
-	----------
-	----------
-	----------
-	----------

RIYAN PRIVATE LIMITED

t : +9603315049 f : +9603310776
e : info@riyan.com.mv
w : www.riyan.com.mv
3rd floor, H. Azum, Ameeneemagu, Male'

Title: First Floor
Lighting Layout

Page: EL 02-03

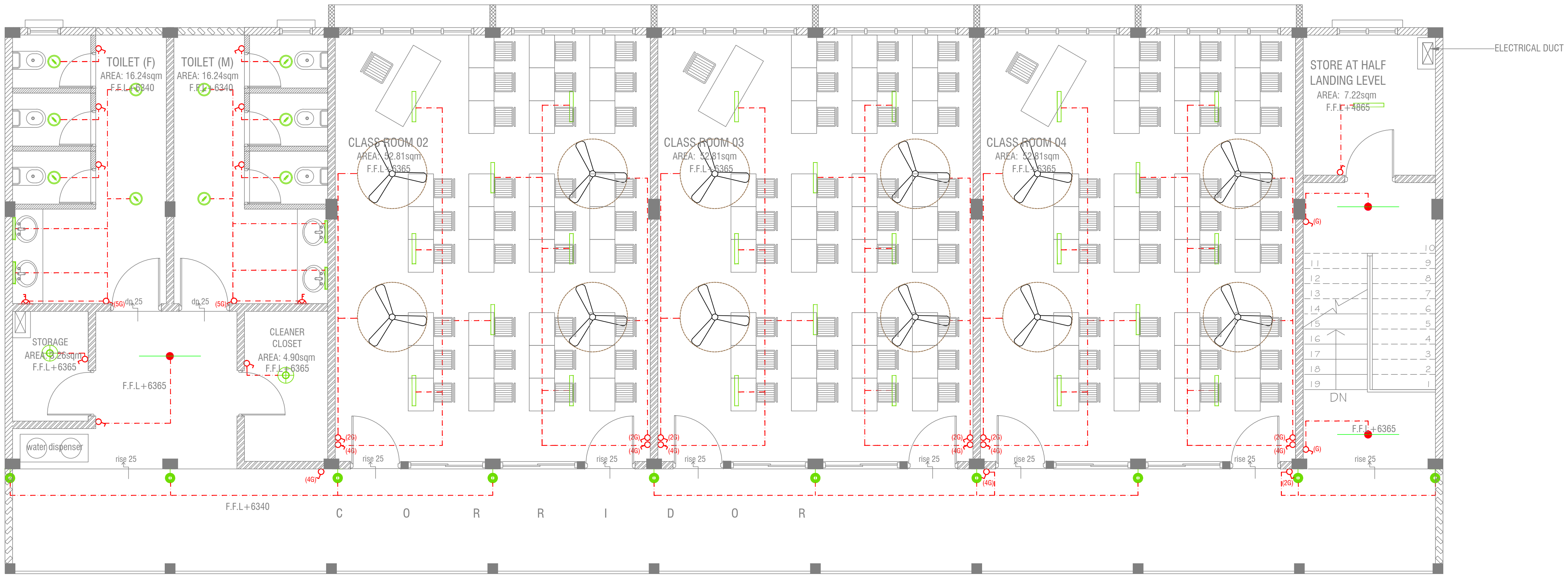
TOILET (F)
AREA: 16.24sqm
F.F.L+6340
TOILET (M)
AREA: 16.24sqm
F.F.L+6340
dp 25
dp 25
(5G)
(5G)
STORAGE
AREA: 3.26sqm
F.F.L+6365
F.F.L+6365
CLEANER
CLOSET
AREA: 4.90sqm
F.F.L+6365
water dispenser
rise 25
CLASS ROOM 02
AREA: 52.81sqm
F.F.L+6365
CLASS ROOM 03
AREA: 52.81sqm
F.F.L+6365
CLASS ROOM 04
AREA: 52.81sqm
F.F.L+6365
(2G)
(4G)
(G)
STORE AT HALF
LANDING LEVEL
AREA: 7.22sqm
F.F.L+4865
ELECTRICAL DUCT
DN
F.F.L+6365
F.F.L+6340
C O R R I D O R

SECOND FLOOR LIGHTING LAYOUT

SCALE 1:100

0 0.5 1 2 3 4 5

LEGEND

WPD	40W (IP 65) OUT DOOR WALL LIGHT
ML	MIRROR LIGHT (7W LED LIGHT)
H2	LED RECESSED DOWN LIGHT 12W
CL	LED CEILING LIGHT 18W
WP	LED TUBE LIGHT WITH WEATHER PROOF OPAL CASING
C2	LED CEILING DOWN LIGHT (18W)
	LIGHT SWITCH
	SWITCHING LINE
	FLEX OUTLET
CL2	LED TUBE LIGHT WITH OPAL CASING
	CEILING FAN (52" - 54")

NOTE:

- ALL WIRING TO BE OF STELCO APPROVED STANDARDS
- SWITCH CONTROL = 1200MM FROM FLOOR FIN. LEVEL
-ALL LIGHTING POINTS CONNECTED TO THEIR RESPECTIVE DB
- POLYCARBONATE ENCLOSURE TO ALL SWITCH AND SOCKET WHICH ARE LOCATED AT THE OUTDOORS

Rev no	Date
-	
-	
-	
-	

M.Mulaku School
Client: Ministry of Education

Project Number: RI/2020/006
Date: March 2021
Architect : Mariyam Irasha Shareef
Engineer : Mohamed Muththalib Waleed
Drawn by : Mariyam Leevan Jaleel
Services : Aishath Ahmed
Interior : -

RIYAN PRIVATE LIMITED

t : +9603315049 f : +9603310776
e : info@riyan.com.mv
w : www.riyan.com.mv
3rd floor, H. Azum, Ameeneemagu, Male'

Title: Second Floor Lighting Layout

Page: EL 03-03

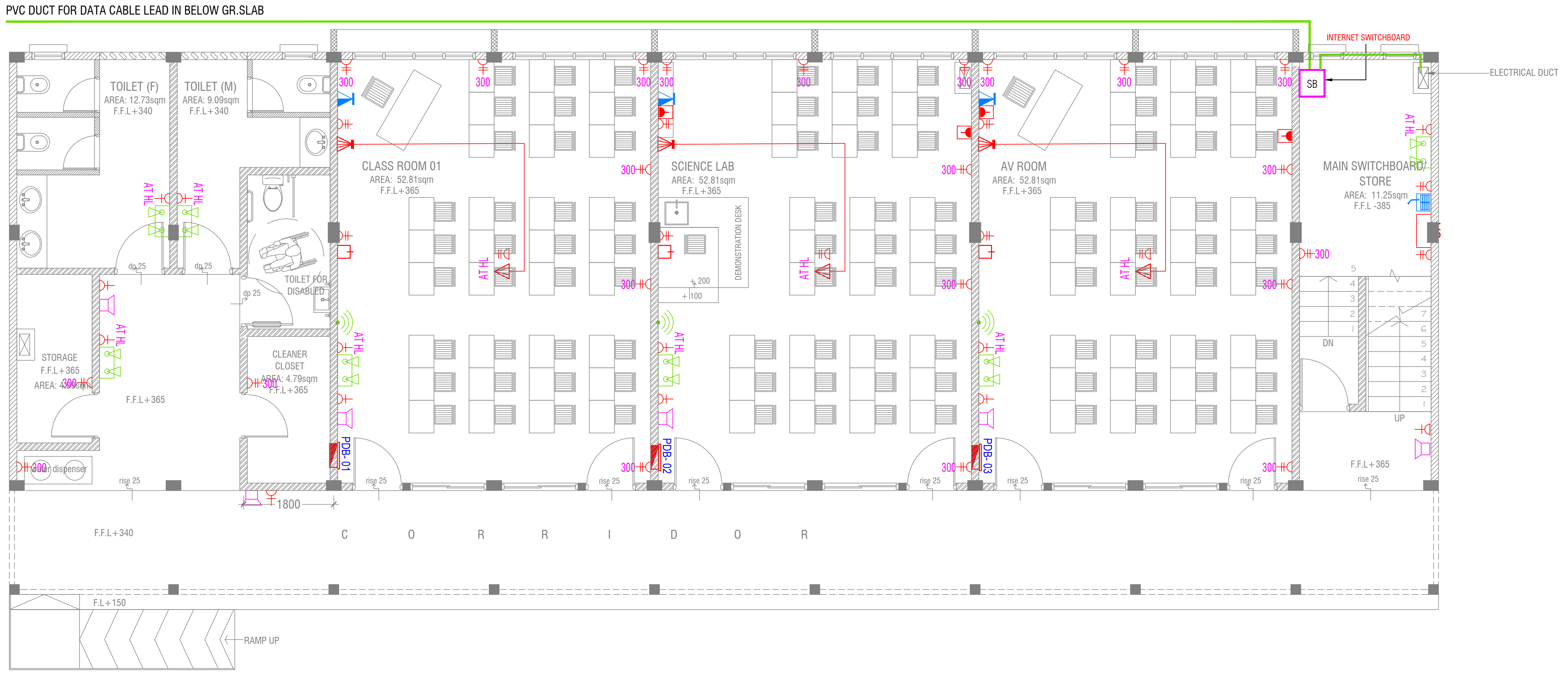
PVC DUCT FOR DATA CABLE LEAD IN BELOW GR.SLAB
INTERNET SWITCHBOARD
ELECTRICAL DUCT
SB
TOILET (F)
AREA: 12.73sqm
F.F.L+340
TOILET (M)
AREA: 9.09sqm
F.F.L+340
CLASS ROOM 01
AREA: 52.81sqm
F.F.L+365
SCIENCE LAB
AREA: 52.81sqm
F.F.L+365
AV ROOM
AREA: 52.81sqm
F.F.L+365
MAIN SWITCHBOARD/
STORE
AREA: 11.25sqm
F.F.L -385
TOILET FOR
DISABLED
STORAGE
F.F.L+365
CLEANER
CLOSET
AREA: 4.79sqm
F.F.L+365
F.F.L+365
DEMONSTRATION DESK
water dispenser
PDB- 01
PDB- 02
PDB- 03
AT HL
300
200
100
dp 25
rise 25
1800
DN
UP
F.F.L+365
C O R R I D O R
F.F.L+340
F.L+150
RAMP UP

GROUND FLOOR POWER LAYOUT

SCALE 1:100

0 0.5 1 2 3 4 5

NOTE:

1. ALL WIRING TO BE OF APPROVED STANDARDS
2. POWER/IT/COMPUTER SOCKETS = 300MM - 450MM FROM FLOOR FIN. LEVEL
3. SWITCH CONTROL / SOCKET = 1100MM - 1200MM FROM FLOOR FIN. LEVEL
4. KITCHEN SOCKETS / PANTRY SOCKETS = 1150MM - 1250MM FROM FLOOR FIN. LEVEL
5. AC = 2500MM - 2700MM FROM FLOOR FIN. LEVEL

LEGEND

TELEPHONE OUTLET (RJ11, CONNECTOR)
13A POWER OUTLET
13A TWIN SOCKET OUTLET
HDMI,VGA & RAC AV SOCKET
DISTRIBUTION BOX
SPEAKERS
HDMI,VGA & RAC AV TWIN SOCKET
TWIN COMPUTER NETWORK OUTLET
DATA POINT
TWO GANG / TV SOCKET
15A.SWITCHED/ SPUR UNIT @ H.L.

PAGING MIC
VC VOLUME CONTROLLER
EM EMERGENCY LIGHT

ALL ELECTRICAL COMPONENT TO BE CONNECTED TO THEIR RESPECTIVE DB

SPEAKERS TO BE CONNECTED TO THE MAIN PA SYSTEM OF THE SCHOOL

TO SUPPLY AND INSTALL PANEL BOARD WITH KWh METER. WIRING AND CONNECTION TO MAIN PANEL BOARD FROM MAIN ELECTRICAL NETWORK (LOCATED AT MAIN SWITCH BOARD / STORE)

Rev no	Date
--	--
--	--
--	--
--	--

M.Mulaku School
Client: Ministry of Education

Project Number: RI/2020/006
Date: March 2021
Architect : Mariyam Irasha Shareef
Engineer : Mohamed Muththalib Waleed
Drawn by : Mariyam Leevan Jaleel
Services : Aishath Ahmed
Interior : -

RIYAN PRIVATE LIMITED

t : +9603315049 f : +9603310776
e : info@riyan.com.mv
w : www.riyan.com.mv
3rd floor, H. Azum, Ameeneemagu, Male'

Title: Ground Floor Power Layout

Page: EP 01-03

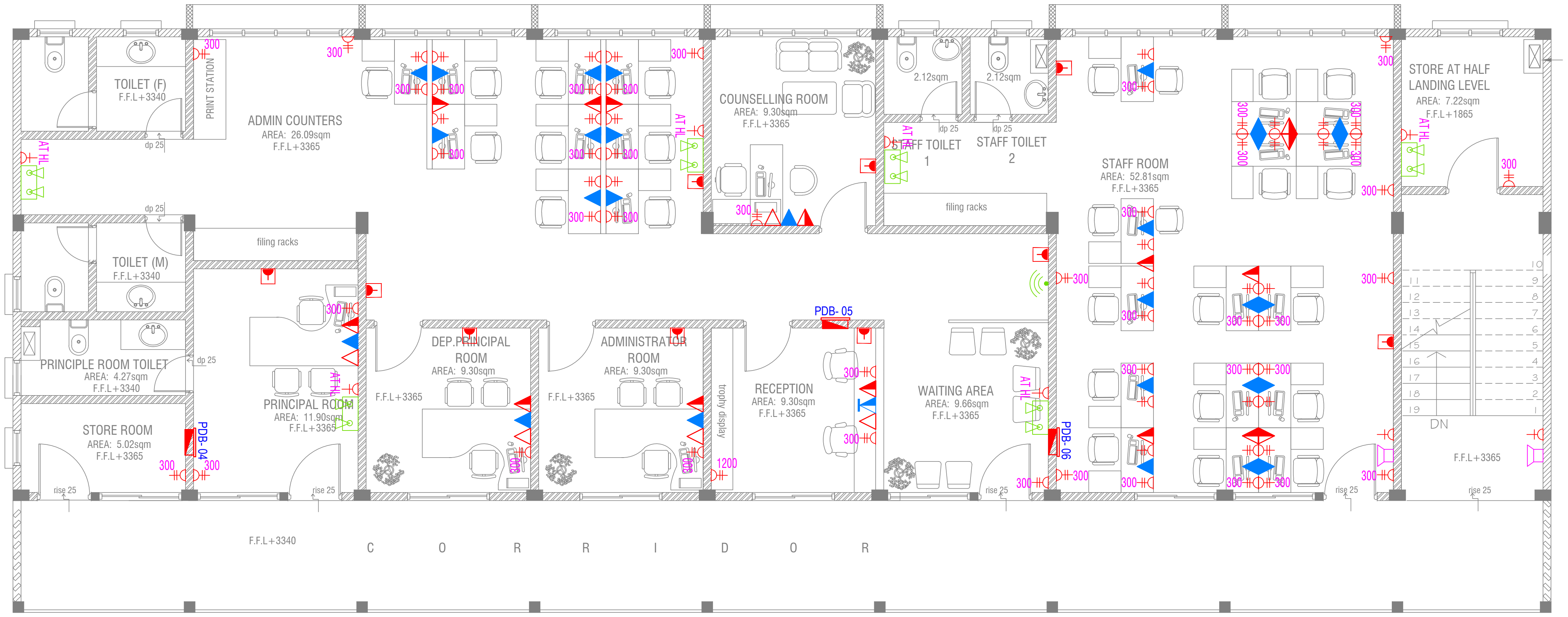
TOILET (F)
F.F.L+3340
PRINT STATION
ADMIN COUNTERS
AREA: 26.09sqm
F.F.L+3365
COUNSELLING ROOM
AREA: 9.30sqm
F.F.L+3365
2.12sqm
STAFF TOILET 1
STAFF TOILET 2
filing racks
STAFF ROOM
AREA: 52.81sqm
F.F.L+3365
STORE AT HALF LANDING LEVEL
AREA: 7.22sqm
F.F.L+1865
TOILET (M)
F.F.L+3340
PRINCIPLE ROOM TOILET
AREA: 4.27sqm
F.F.L+3340
PRINCIPAL ROOM
AREA: 11.90sqm
F.F.L+3365
STORE ROOM
AREA: 5.02sqm
F.F.L+3365
DEP.PRINCIPAL ROOM
AREA: 9.30sqm
ADMINISTRATOR ROOM
AREA: 9.30sqm
trophy display
RECEPTION
AREA: 9.30sqm
F.F.L+3365
WAITING AREA
AREA: 9.66sqm
F.F.L+3365
PDB- 04
PDB- 05
PDB- 06
AT HL
DN
F.F.L+3340
C O R R I D O R

FIRST FLOOR POWER LAYOUT

SCALE 1:100

0 0.5 1 2 3 4 5

NOTE:

1. ALL WIRING TO BE OF APPROVED STANDARDS
2. POWER/IT/COMPUTER SOCKETS = 300MM - 450MM FROM FLOOR FIN. LEVEL
3. SWITCH CONTROL / SOCKET = 1100MM - 1200MM FROM FLOOR FIN. LEVEL
4. KITCHEN SOCKETS / PANTRY SOCKETS = 1150MM - 1250MM FROM FLOOR FIN. LEVEL
5. AC = 2500MM - 2700MM FROM FLOOR FIN. LEVEL

LEGEND

- ▲ TELEPHONE OUTLET (RJ11, CONNECTOR)
- 13A POWER OUTLET
- 13A TWIN SOCKET OUTLET
- △ HDMI,VGA & RAC AV SOCKET
- DISTRIBUTION BOX
- SPEAKERS
- HDMI,VGA & RAC AV TWIN SOCKET
- TWIN COMPUTER NETWORK OUTLET
- DATA POINT
- TWO GANG / TV SOCKET
- ▲ COMPUTER NETWORK OUTLET
- 15A.SWITCHED/ SPUR UNIT @ H.L.
- PAGING MIC
- VC VOLUME CONTROLLER
- EM EMERGENCY LIGHT

ALL ELECTRICAL COMPONENT TO BE CONNECTED TO THEIR RESPECTIVE DB

SPEAKERS TO BE CONNECTED TO THE MAIN PA SYSTEM OF THE SCHOOL

Rev no	Date
-	----------
-	----------
-	----------
-	----------

M.Mulaku School
Client: Ministry of Education

Project Number: RI/2020/006
Date: March 2021
Architect : Mariyam Irasha Shareef
Engineer : Mohamed Muththalib Waleed
Drawn by : Mariyam Leevan Jaleel
Services : Aishath Ahmed
Interior : -

RIYAN PRIVATE LIMITED
t : +9603315049 f : +9603310776
e : info@riyan.com.mv
w : www.riyan.com.mv
3rd floor, H. Azum, Ameeneemagu, Male'

Title: First Floor Power Layout

Page: EP 02-03

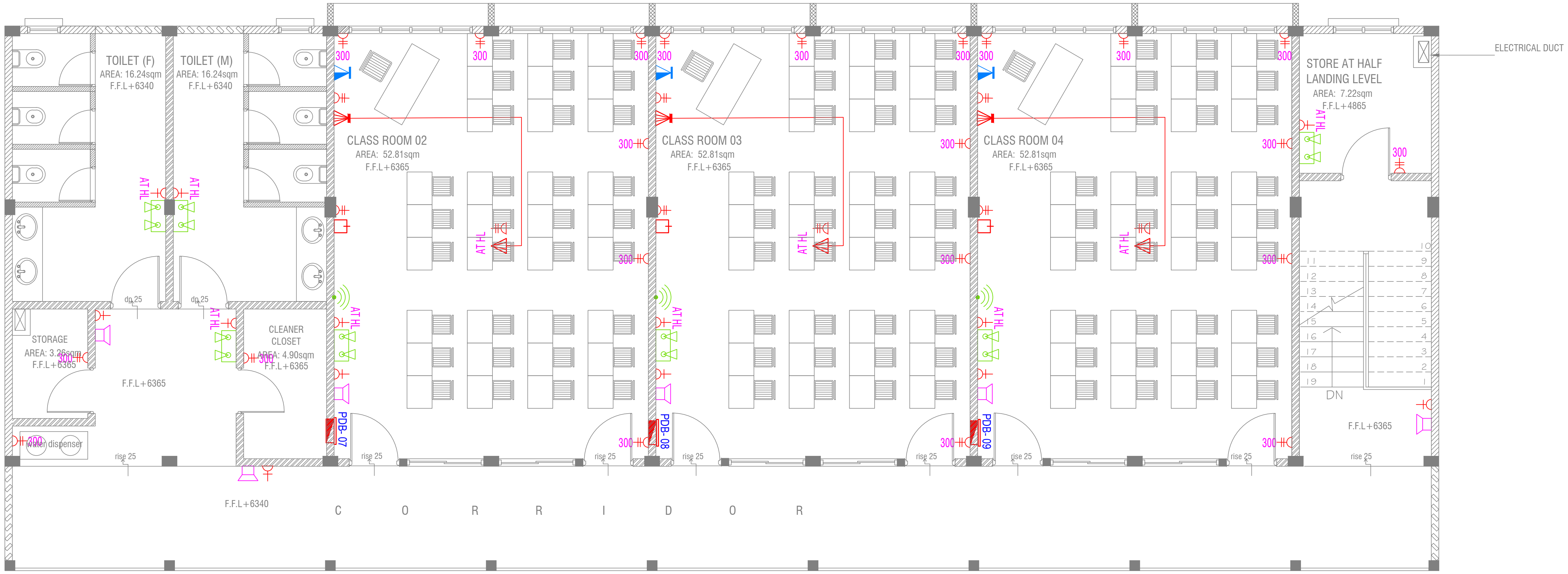
TOILET (F)
AREA: 16.24sqm
F.F.L+6340
TOILET (M)
AREA: 16.24sqm
F.F.L+6340
AT HL
dp 25
STORAGE
AREA: 3.26sqm
F.F.L+6365
CLEANER CLOSET
AREA: 4.90sqm
F.F.L+6365
F.F.L+6365
water dispenser
rise 25
F.F.L+6340
C O R R I D O R
CLASS ROOM 02
AREA: 52.81sqm
F.F.L+6365
CLASS ROOM 03
AREA: 52.81sqm
F.F.L+6365
CLASS ROOM 04
AREA: 52.81sqm
F.F.L+6365
300
PDB- 07
PDB- 08
PDB- 09
STORE AT HALF LANDING LEVEL
AREA: 7.22sqm
F.F.L+4865
ELECTRICAL DUCT
DN
F.F.L+6365
1 2 3 4 5 6 7 8 9 10 11 12 13 14 15 16 17 18 19

SECOND FLOOR POWER LAYOUT

SCALE 1:100

0 0.5 1 2 3 4 5

NOTE:

1. ALL WIRING TO BE OF APPROVED STANDARDS
2. POWER/IT/COMPUTER SOCKETS = 300MM - 450MM FROM FLOOR FIN. LEVEL
3. SWITCH CONTROL / SOCKET = 1100MM - 1200MM FROM FLOOR FIN. LEVEL
4. KITCHEN SOCKETS / PANTRY SOCKETS = 1150MM - 1250MM FROM FLOOR FIN. LEVEL
5. AC = 2500MM - 2700MM FROM FLOOR FIN. LEVEL

LEGEND

TELEPHONE OUTLET (RJ11, CONNECTOR)
13A POWER OUTLET
13A TWIN SOCKET OUTLET
HDMI,VGA & RAC AV SOCKET
DISTRIBUTION BOX
SPEAKERS
HDMI,VGA & RAC AV TWIN SOCKET
TWIN COMPUTER NETWORK OUTLET
DATA POINT
TWO GANG / TV SOCKET

PAGING MIC
VC VOLUME CONTROLLER
EM EMERGENCY LIGHT

ALL ELECTRICAL COMPONENT TO BE CONNECTED TO THEIR RESPECTIVE DB

SPEAKERS TO BE CONNECTED TO THE MAIN PA SYSTEM OF THE SCHOOL

M.Mulaku School
Client: Ministry of Education

Project Number: RI/2020/006
Date: March 2021
Architect : Mariyam Irasha Shareef
Engineer : Mohamed Muththalib Waleed
Drawn by : Mariyam Leevan Jaleel
Services : Aishath Ahmed
Interior : -

Rev no	Date
-	------------
-	------------
-	------------
-	------------

RIYAN PRIVATE LIMITED
t : +9603315049 f : +9603310776
e : info@riyan.com.mv
w : www.riyan.com.mv
3rd floor, H. Azum, Ameeneemagu, Male'

Title: Second Floor Power Layout

Page: EP 03-03

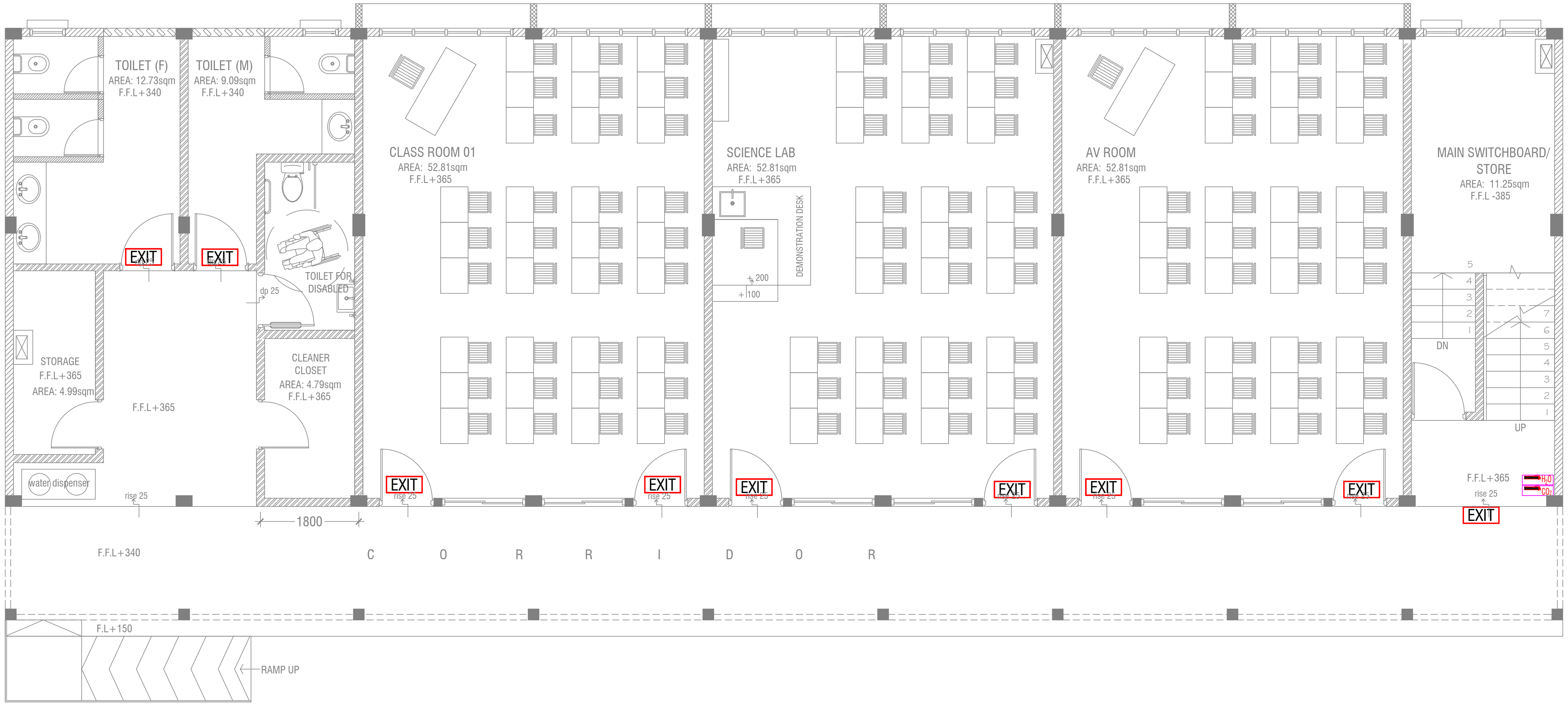
TOILET (F)
AREA: 12.73sqm
F.F.L+340
TOILET (M)
AREA: 9.09sqm
F.F.L+340
EXIT
EXIT
dp 25
TOILET FOR DISABLED
STORAGE
F.F.L+365
AREA: 4.99sqm
F.F.L+365
CLEANER CLOSET
AREA: 4.79sqm
F.F.L+365
water dispenser
rise 25
1800
CLASS ROOM 01
AREA: 52.81sqm
F.F.L+365
SCIENCE LAB
AREA: 52.81sqm
F.F.L+365
DEMONSTRATION DESK
200
100
AV ROOM
AREA: 52.81sqm
F.F.L+365
MAIN SWITCHBOARD/ STORE
AREA: 11.25sqm
F.F.L -385
DN
UP
F.F.L+365
rise 25
H_2O
CO_2
EXIT
EXIT
EXIT
EXIT
EXIT
EXIT
EXIT
F.F.L+340
C O R R I D O R
F.L+150
RAMP UP

GROUND FLOOR FDP LAYOUT

SCALE 1:100

0 0.5 1 2 3 4 5

LEGEND

EXIT	EXIT SIGN
CO_2	CO_2 EXTINGUISHER (LOAD: 2KG) IN POLYCARBONATE ENCLOUSURE(TYP.)
H_2O	H_2O EXTINGUISHER (LOAD: 9L) IN POLYCARBONATE ENCLOSURE(TYP.)

ALL FIRE CABLES AND CONDUITS SHOULD BE FIRE RETARDANT LOW SMOKE (FRLS) TYPE.

ALL FIRE RATED DOOR SHOULD COME WITH PACKING (EXPANSION SEAL TRAP)

1.ALL PIPES SHOULD BE GALVANIZED,SCHEDULE 40.
2. ALL PIPE SHALL BE PAINTED IN RED AS PER REGULATION.
3. ALL SUPPORT/BRACKET SHALL BE HOT DIPPED GALVANIZED TO 100MM 4.ALL FIRE EXTINGUISHER INSIDE CABINETS. (CABINET SHOULD BE PROVIDED)

-IF THE INSTALLATION OF CEILING IS CARRIED OUT LOWER THAN BEAM BOTTOM ,SMOKE DETECTORS SHOULD BE PLACED AS INDICATED ON THE DRAWING.
-ALTERNATIVELY IF THE INSTALLATION OF CEILING IS CARRIED OUT EQUAL TO BEAM BOTTOM OR IF THE CEILING IS NOT INSTALLED , SMOKE DETECTORS ARE TO BE PLACED IN BETWEEN EACH BEAM

M.Mulaku School
Client: Ministry of Education

Project Number: RI/2020/006
Date: March 2021
Architect : Mariyam Irasha Shareef
Engineer : Mohamed Muththalib Waleed
Drawn by : Mariyam Leevan Jaleel
Services : Aishath Ahmed
Interior : -

Rev no	Date
-	----------
-	----------
-	----------
-	----------

RIYAN PRIVATE LIMITED

t : +9603315049 f : +9603310776
e : info@riyan.com.mv
w : www.riyan.com.mv
3rd floor, H. Azum, Ameeneemagu, Male'

Title: Ground Floor FDP Layout

Page: FDP 01-03

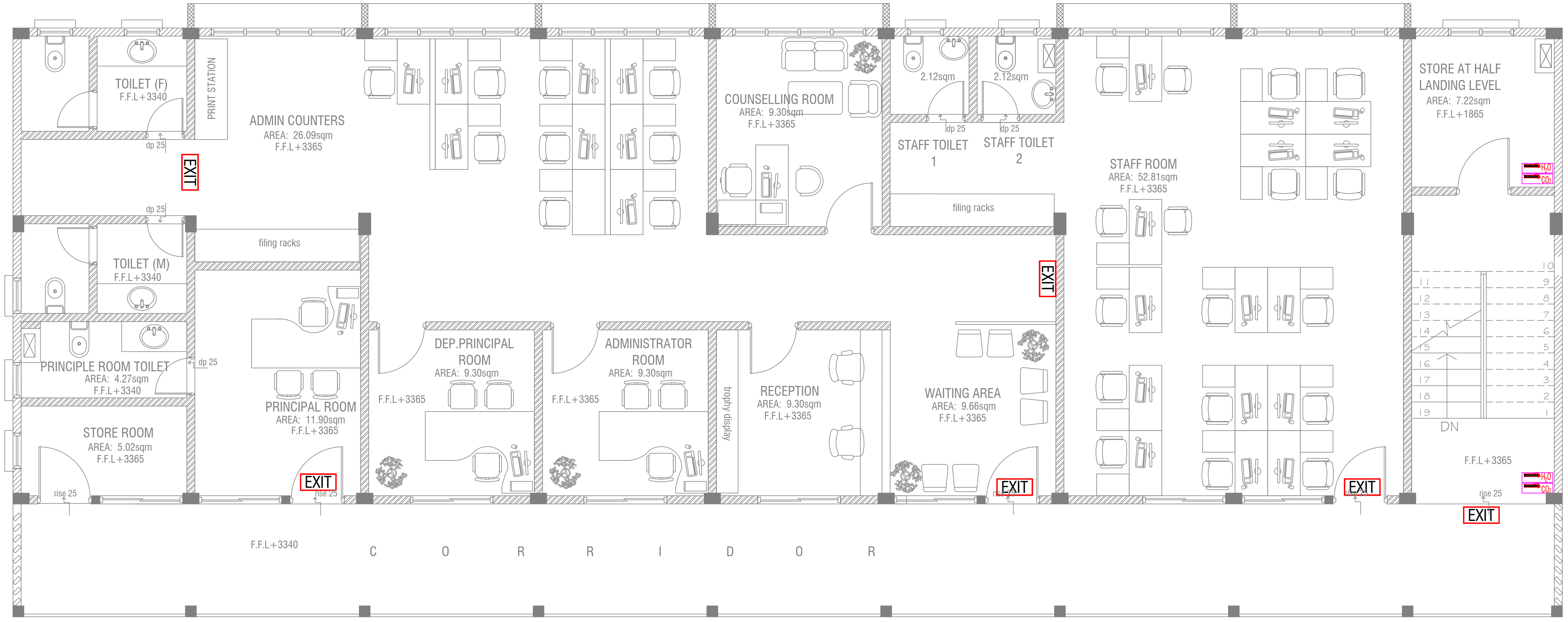
TOILET (F)
F.F.L+3340
dp 25
PRINT STATION
ADMIN COUNTERS
AREA: 26.09sqm
F.F.L+3365
EXIT
COUNSELLING ROOM
AREA: 9.30sqm
F.F.L+3365
2.12sqm
2.12sqm
dp 25
dp 25
STAFF TOILET 1
STAFF TOILET 2
filing racks
STAFF ROOM
AREA: 52.81sqm
F.F.L+3365
STORE AT HALF LANDING LEVEL
AREA: 7.22sqm
F.F.L+1865
H_2O
CO_2
dp 25
filing racks
TOILET (M)
F.F.L+3340
EXIT
dp 25
PRINCIPLE ROOM TOILET
AREA: 4.27sqm
F.F.L+3340
DEP.PRINCIPAL ROOM
AREA: 9.30sqm
ADMINISTRATOR ROOM
AREA: 9.30sqm
F.F.L+3365
F.F.L+3365
trophy display
RECEPTION
AREA: 9.30sqm
F.F.L+3365
WAITING AREA
AREA: 9.66sqm
F.F.L+3365
PRINCIPAL ROOM
AREA: 11.90sqm
F.F.L+3365
STORE ROOM
AREA: 5.02sqm
F.F.L+3365
1 2 3 4 5 6 7 8 9 10
11 12 13 14 15 16 17 18 19
DN
F.F.L+3365
H_2O
CO_2
rise 25
rise 25
rise 25
EXIT
EXIT
EXIT
EXIT
rise 25
F.F.L+3340
C O R R I D O R

FIRST FLOOR FDP LAYOUT

SCALE 1:100

0 0.5 1 2 3 4 5

LEGEND

EXIT	EXIT SIGN
▮	CO_2 EXTINGUISHER (LOAD: 2KG) IN POLYCARBONATE ENCLOUSURE(TYP.)
▮	H_2O EXTINGUISHER (LOAD: 9L) IN POLYCARBONATE ENCLOSURE(TYP.)

ALL FIRE CABLES AND CONDUITS SHOULD BE FIRE RETARDANT LOW SMOKE (FRLS) TYPE.

ALL FIRE RATED DOOR SHOULD COME WITH PACKING (EXPANSION SEAL TRAP)

1.ALL PIPES SHOULD BE GALVANIZED,SCHEDULE 40.
2. ALL PIPE SHALL BE PAINTED IN RED AS PER REGULATION.
3. ALL SUPPORT/BRACKET SHALL BE HOT DIPPED GALVANIZED TO 100MM 4.ALL FIRE EXTINGUISHER INSIDE CABINETS. (CABINET SHOULD BE PROVIDED)

-IF THE INSTALLATION OF CEILING IS CARRIED OUT LOWER THAN BEAM BOTTOM ,SMOKE DETECTORS SHOULD BE PLACED AS INDICATED ON THE DRAWING.
-ALTERNATIVELY IF THE INSTALLATION OF CEILING IS CARRIED OUT EQUAL TO BEAM BOTTOM OR IF THE CEILING IS NOT INSTALLED , SMOKE DETECTORS ARE TO BE PLACED IN BETWEEN EACH BEAM

M.Mulaku School
Client: Ministry of Education

Project Number: RI/2020/006
Date: March 2021
Architect : Mariyam Irasha Shareef
Engineer : Mohamed Muththalib Waleed
Drawn by : Mariyam Leevan Jaleel
Services : Aishath Ahmed
Interior : -

Rev no	Date
--	----------
--	----------
--	----------
--	----------

RIYAN PRIVATE LIMITED

t : +9603315049 f : +9603310776
e : info@riyan.com.mv
w : www.riyan.com.mv
3rd floor, H. Azum, Ameeneemagu, Male'

Title: First Floor FDP Layout

Page: FDP 02-03

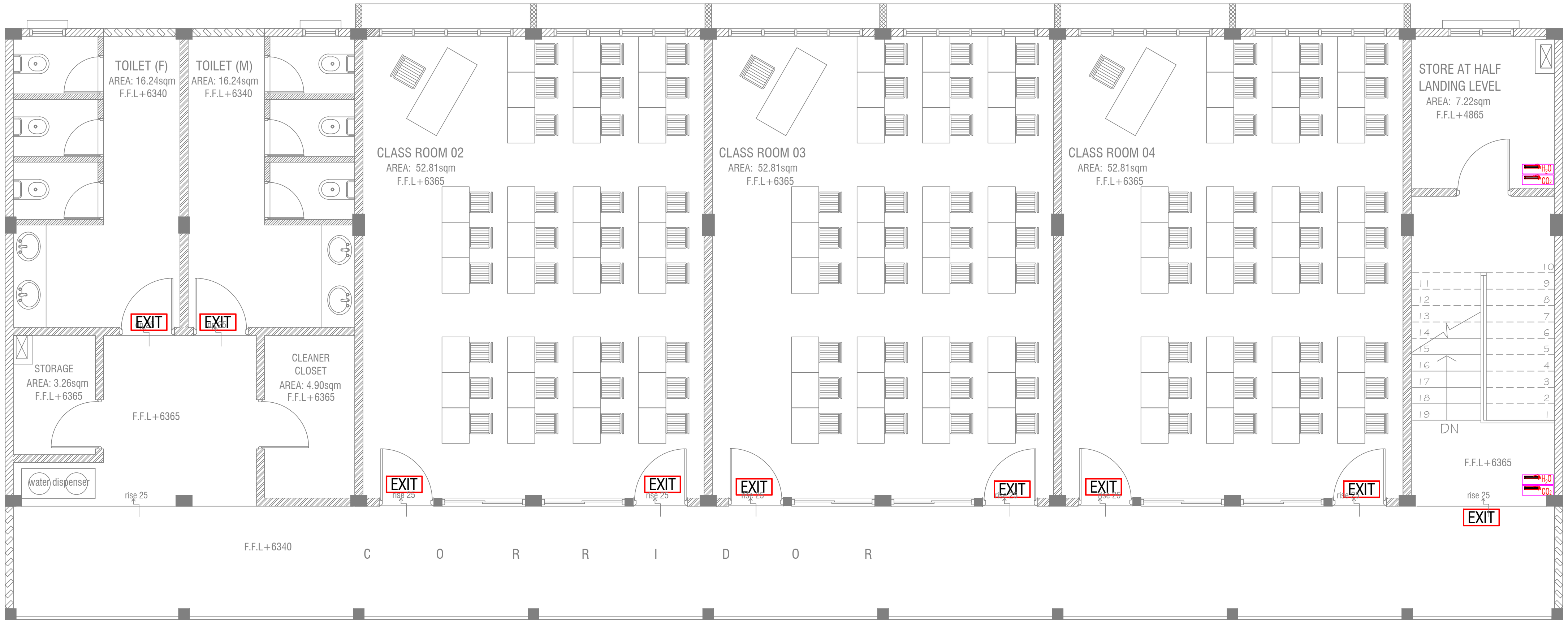
TOILET (F)
AREA: 16.24sqm
F.F.L+6340
TOILET (M)
AREA: 16.24sqm
F.F.L+6340
EXIT
EXIT
STORAGE
AREA: 3.26sqm
F.F.L+6365
F.F.L+6365
CLEANER CLOSET
AREA: 4.90sqm
F.F.L+6365
water dispenser
rise 25
CLASS ROOM 02
AREA: 52.81sqm
F.F.L+6365
CLASS ROOM 03
AREA: 52.81sqm
F.F.L+6365
CLASS ROOM 04
AREA: 52.81sqm
F.F.L+6365
STORE AT HALF LANDING LEVEL
AREA: 7.22sqm
F.F.L+4865
EXIT
EXIT
EXIT
EXIT
EXIT
EXIT
EXIT
rise 25
DN
F.F.L+6365
F.F.L+6340
C O R R I D O R

SECOND FLOOR FDP LAYOUT

SCALE 1:100

0 0.5 1 2 3 4 5

LEGEND

EXIT	EXIT SIGN
CO_2	CO_2 EXTINGUISHER (LOAD: 2KG) IN POLYCARBONATE ENCLOUSURE(TYP.)
H_2O	H_2O EXTINGUISHER (LOAD: 9L) IN POLYCARBONATE ENCLOSURE(TYP.)

ALL FIRE CABLES AND CONDUITS SHOULD BE FIRE RETARDANT LOW SMOKE (FRLS) TYPE.

ALL FIRE RATED DOOR SHOULD COME WITH PACKING (EXPANSION SEAL TRAP)

1.ALL PIPES SHOULD BE GALVANIZED,SCHEDULE 40.
2. ALL PIPE SHALL BE PAINTED IN RED AS PER REGULATION.
3. ALL SUPPORT/BRACKET SHALL BE HOT DIPPED GALVANIZED TO 100MM 4.ALL FIRE EXTINGUISHER INSIDE CABINETS. (CABINET SHOULD BE PROVIDED)

-IF THE INSTALLATION OF CEILING IS CARRIED OUT LOWER THAN BEAM BOTTOM ,SMOKE DETECTORS SHOULD BE PLACED AS INDICATED ON THE DRAWING.
-ALTERNATIVELY IF THE INSTALLATION OF CEILING IS CARRIED OUT EQUAL TO BEAM BOTTOM OR IF THE CEILING IS NOT INSTALLED , SMOKE DETECTORS ARE TO BE PLACED IN BETWEEN EACH BEAM

M.Mulaku School
Client: Ministry of Education

Project Number: RI/2020/006
Date: March 2021
Architect : Mariyam Irasha Shareef
Engineer : Mohamed Muththalib Waleed
Drawn by : Mariyam Leevan Jaleel
Services : Aishath Ahmed
Interior : -

Rev no	Date
--	----------
--	----------
--	----------
--	----------

RIYAN PRIVATE LIMITED
t : +9603315049 f : +9603310776
e : info@riyan.com.mv
w : www.riyan.com.mv
3rd floor, H. Azum, Ameeneemagu, Male'

Title: Second Floor FDP Layout

Page: FDP 03-03

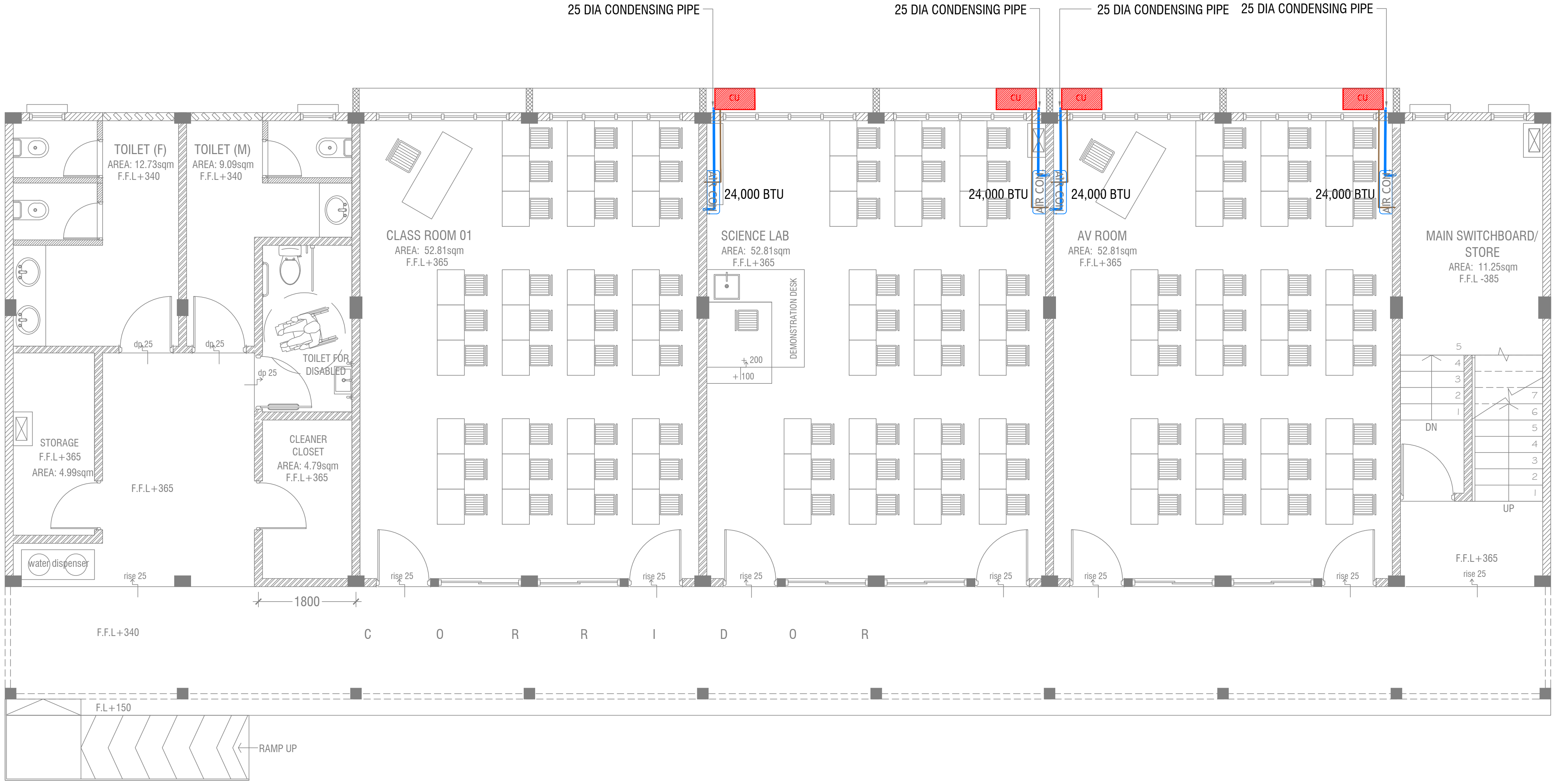
25 DIA CONDENSING PIPE
25 DIA CONDENSING PIPE
25 DIA CONDENSING PIPE
25 DIA CONDENSING PIPE
CU
CU
CU
CU
TOILET (F)
AREA: 12.73sqm
F.F.L+340
TOILET (M)
AREA: 9.09sqm
F.F.L+340
CLASS ROOM 01
AREA: 52.81sqm
F.F.L+365
24,000 BTU
AIR CON
SCIENCE LAB
AREA: 52.81sqm
F.F.L+365
DEMONSTRATION DESK
200
100
24,000 BTU
AIR CON
24,000 BTU
AIR CON
AV ROOM
AREA: 52.81sqm
F.F.L+365
24,000 BTU
AIR CON
MAIN SWITCHBOARD/ STORE
AREA: 11.25sqm
F.F.L -385
dp 25
dp 25
dp 25
TOILET FOR DISABLED
STORAGE
F.F.L+365
AREA: 4.99sqm
F.F.L+365
CLEANER CLOSET
AREA: 4.79sqm
F.F.L+365
DN
UP
5
4
3
2
1
7
6
5
4
3
2
1
F.F.L+365
water dispenser
rise 25
rise 25
rise 25
rise 25
rise 25
rise 25
rise 25
rise 25
1800
F.F.L+340
C O R R I D O R
F.L+150
RAMP UP

LEGEND

REFRIGERANT PIPES

25 Ø CONDENSATE DRAIN PIPE

🟥 CONDENSING UNIT

GROUND FLOOR ACV LAYOUT

SCALE 1:100

0 0.5 1 2 3 4 5

M.Mulaku School
Client: Ministry of Education

Project Number: RI/2020/006
Date: March 2021
Architect : Mariyam Irasha Shareef
Engineer : Mohamed Muththalib Waleed
Drawn by : Mariyam Leevan Jaleel
Services : Aishath Ahmed
Interior : -

Rev no	Date
-	-
-	-
-	-
-	-

RIYAN PRIVATE LIMITED

t : +9603315049 f : +9603310776
e : info@riyan.com.mv
w : www.riyan.com.mv
3rd floor, H. Azum, Ameeneemagu, Male'

Title: Ground Floor
ACV Layout

Page: ACV 01-02

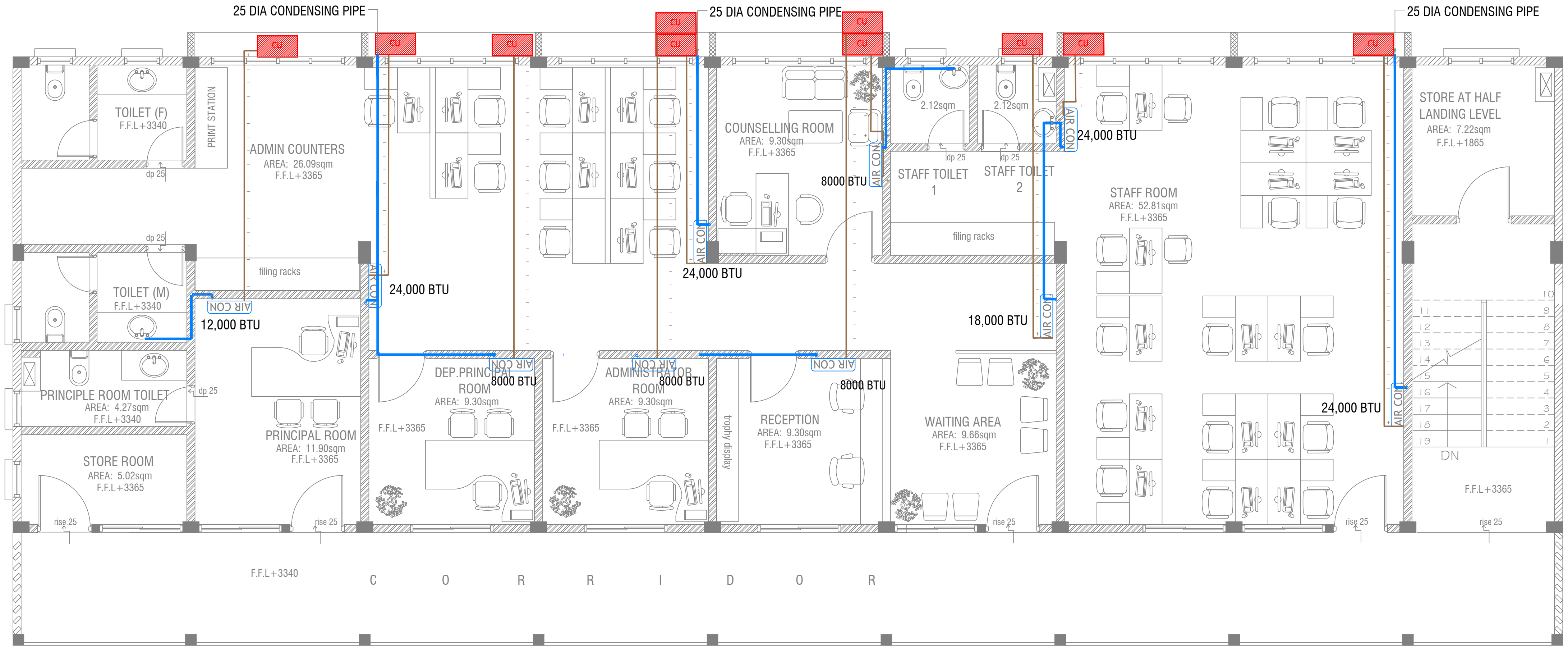
25 DIA CONDENSING PIPE
25 DIA CONDENSING PIPE
25 DIA CONDENSING PIPE
CU
TOILET (F)
F.F.L+3340
PRINT STATION
ADMIN COUNTERS
AREA: 26.09sqm
F.F.L+3365
dp 25
TOILET (M)
F.F.L+3340
filing racks
AIR CON
12,000 BTU
24,000 BTU
PRINCIPLE ROOM TOILET
AREA: 4.27sqm
F.F.L+3340
PRINCIPAL ROOM
AREA: 11.90sqm
F.F.L+3365
STORE ROOM
AREA: 5.02sqm
F.F.L+3365
rise 25
DEP.PRINCIPAL
ROOM
AREA: 9.30sqm
8000 BTU
F.F.L+3365
ADMINISTRATOR
ROOM
AREA: 9.30sqm
8000 BTU
F.F.L+3365
COUNSELLING ROOM
AREA: 9.30sqm
F.F.L+3365
24,000 BTU
8000 BTU
trophy display
RECEPTION
AREA: 9.30sqm
F.F.L+3365
8000 BTU
2.12sqm
2.12sqm
dp 25
STAFF TOILET
1
STAFF TOILET
2
filing racks
18,000 BTU
24,000 BTU
WAITING AREA
AREA: 9.66sqm
F.F.L+3365
STAFF ROOM
AREA: 52.81sqm
F.F.L+3365
24,000 BTU
STORE AT HALF
LANDING LEVEL
AREA: 7.22sqm
F.F.L+1865
DN
F.F.L+3365
F.F.L+3340
C O R R I D O R

LEGEND

━━	REFRIGERANT PIPES
┈┈	25 Ø CONDENSATE DRAIN PIPE
🟥 CU	CONDENSING UNIT

FIRST FLOOR ACV LAYOUT

SCALE 1:100

0 0.5 1 2 3 4 5

M.Mulaku School
Client: Ministry of Education

Project Number: RI/2020/006
Date: March 2021
Architect : Mariyam Irasha Shareef
Engineer : Mohamed Muththalib Waleed
Drawn by : Mariyam Leevan Jaleel
Services : Aishath Ahmed
Interior : -

Rev no	Date
-	-
-	-
-	-
-	-

RIYAN PRIVATE LIMITED

t : +9603315049 f : +9603310776
e : info@riyan.com.mv
w : www.riyan.com.mv
3rd floor, H. Azum, Ameeneemagu, Male'

Title: First Floor
ACV Layout

Page: ACV 02-02

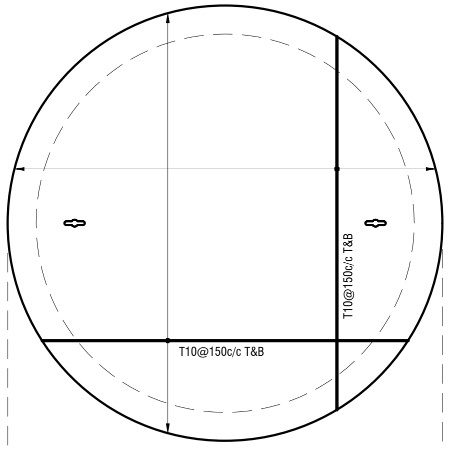
T10@150c/c T&B
T10@150c/c T&B

WATER TANK WALL TOP & BOTTOM SLAB

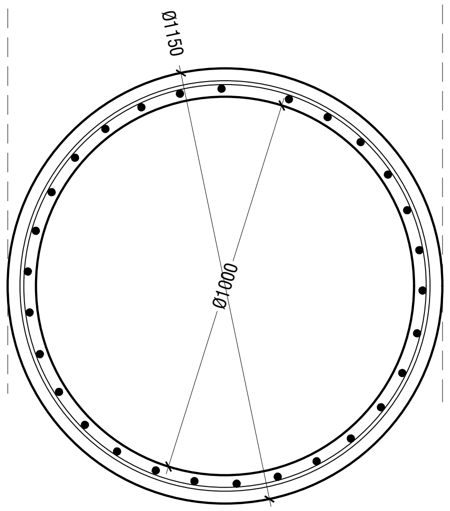
Ø1150
Ø1000

WATER TANK WALL REINF.

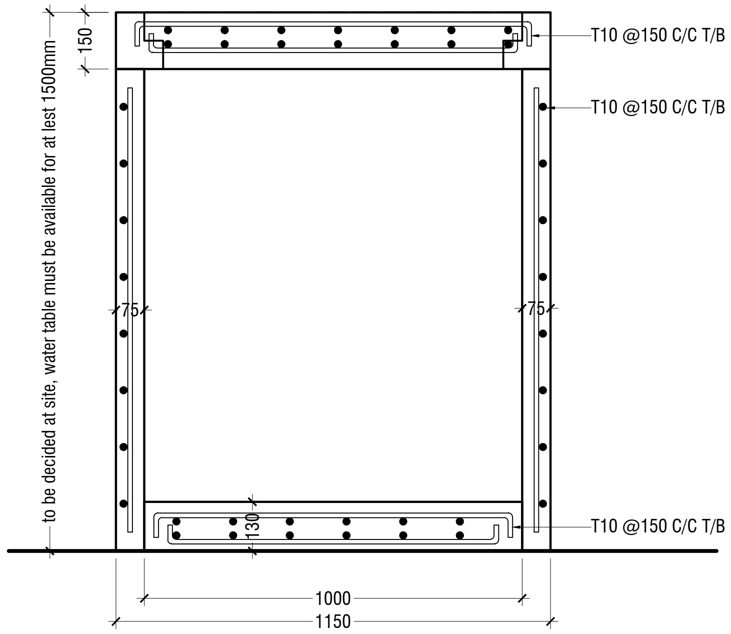
150
to be decided at site, water table must be available for at lest 1500mm
T10 @150 C/C T/B
T10 @150 C/C T/B
75
75
130
T10 @150 C/C T/B
1000
1150

WATER TANK SECTION

WATER TANK DETAILS

SCALE 1:20

0 0.1 0.2 0.4 0.6 0.8 1

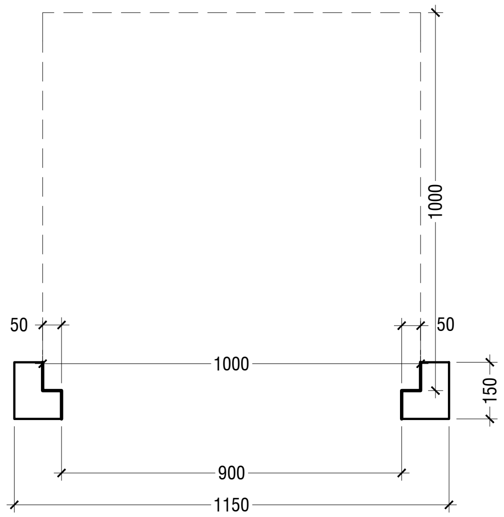
1000
50
50
1000
150
900
1150

ELEVATION

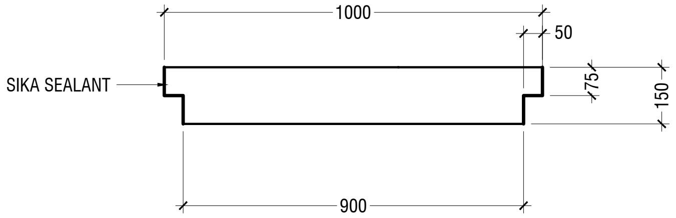
1000
50
SIKA SEALANT
75
150
900

SECTION

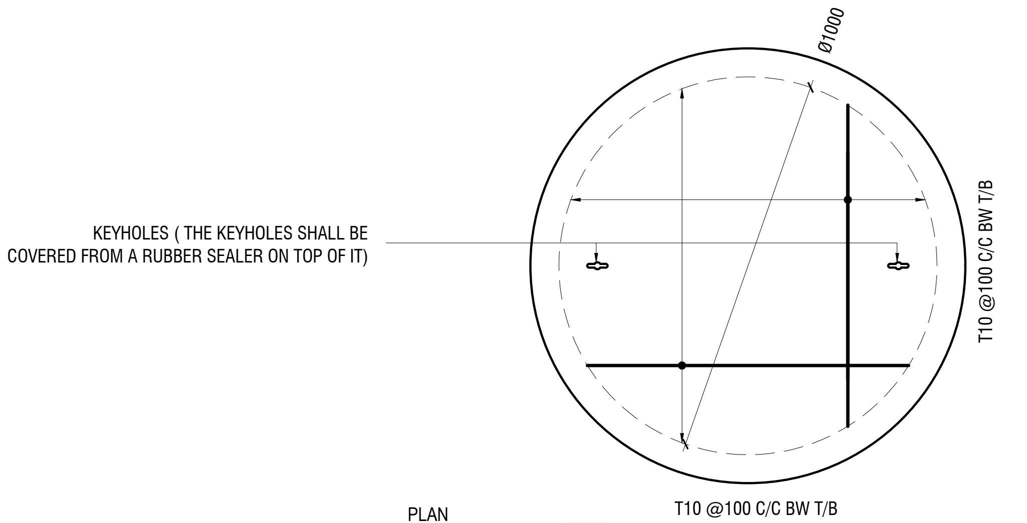
Ø1000
KEYHOLES (THE KEYHOLES SHALL BE
COVERED FROM A RUBBER SEALER ON TOP OF IT)
T10 @100 C/C BW T/B
T10 @100 C/C BW T/B

PLAN

NOTE:

- ALL CONCRETE WORKS BELOW GROUND AND AT TERRACE LEVEL TO BE TREATED WITH 'SIKA' WATERPROOFING CHEMICAL OR EQUIVALENT
- PROVIDE PROVISION FOR WATER ENTRANCE THROUGH THE BASE

WATER TANK LID DETAILS

SCALE 1:20

0 0.1 0.2 0.4 0.6 0.8 1

M.Mulaku School
Client: Ministry of Education

Project Number: RI/2020/006
Date: March 2021
Architect : Mariyam Irasha Shareef
Engineer : Mohamed Muththalib Waleed
Drawn by : Mariyam Leevan Jaleel
Services : Aishath Ahmed
Interior : -

Rev no	Date
--	-------------
--	-------------
--	-------------
--	-------------

RIYAN PRIVATE LIMITED

t : +9603315049 f : +9603310776
e : info@riyan.com.mv
w : www.riyan.com.mv
3rd floor, H. Azum, Ameeneemagu, Male'

Title: Ground Water Well Detail

Page: DETAIL 01-01

The contents of these drawings remain as a property of Riyan Private Limited. Any use other that those expressly stated is a violation of this copyright

BILL OF QUANTITIES

OFFICE BLOCK, STAFF ROOM, AV ROOM, SCIENCE LAB & CLASSROOM at M. MULAKU SCHOOL

CLIENT : MINISTRY OF EDUCATION, GOVERNEMNT OF MALDIVES

SUMMARY OF BILLS OF QUANTITIES

OFFICE BLOCK, STAFF ROOM, AV ROOM, SCIENCE LAB & CLASSROOM at M. MULAKU SCHOOL

DESCRIPTION	AMOUNT	%
Bill №: 01 - PRELIMINARIES		
Bill №: 02 - EXCAVATION AND FILLING		
Bill №: 03 - INSITU CONCRETE WORKS		
Bill №: 04 - MASONRY		
Bill №: 05 - STRUCTURAL METAL WORKS		
Bill №: 06 - ROOFING		
Bill №: 07 - WINDOWS, SCREENS & LIGHTS		
Bill №: 08 - DOORS, SHUTTERS & HATCHES		
Bill №: 09 - FLOOR, WALL, CEILING, AND ROOF FINISHINGS		
Bill №: 10 - SUSPENDED CEILING		
Bill №: 11 - PAINTING & DECORATIONS		
Bill №: 12 - STAIRS, WALKWAYS AND BALUSTRADES		
Bill №: 13 - MECHANICAL & ELECTRICAL SERVICES		
Bill №: 14 - PLUMBING		
Bill №: 15 - INSULATION, FIRE STOPPING & FIRE PROTECTION		
Bill №: 16- ADDITIONS AND OMMISIONS		
TOTAL AMOUNT		

OFFICE BLOCK, STAFF ROOM, AV ROOM, SCIENCE LAB & CLASSROOM at M. MULAKU SCHOOL
Male', Republic of Maldives

BILL OF QUANTITIES

ITEM	DESCRIPTION	UNIT	QTY	MATERIAL RATE	LABOUR RATE	AMOUNT
1.0.00	**Bill №: 01 - PRELIMINARIES**					
1.1.00	**GENERAL NOTES**					
	Abbreviations					
	m - metre					
	nr - numbers					
	m3 - cubic metres					
	m2 - square metres					
	m - linear metre					
	t - tons					
	inc. - including					
	mm - millimetre					
	SS - stainless steel					
	GI - galvanized iron					
1.2.00	**SITE MANAGEMENT COSTS**					
	Allow for all on and off site management cost including costs of foreman and assistants, temporary services, telephone, fax, hoardings & similar.	item	1.00			
1.3.00	**SIGN BOARD**					
	Allow for sign board.	nr	1.00			
1.4.00	**CLEAN-UP**					
	Allow for clean-up upon completion of works.	item	1.00			
1.5.00	**INSURANCE, BONDS, GUARANTEES AND WARRANTIES**					
	Insurance as stated in the general conditions.	item	1.00			

ITEM	DESCRIPTION	UNIT	QTY	MATERIAL RATE	LABOUR RATE	AMOUNT
1.6.00	**TOTAL OF BILL №: 01 - Carried Over To Summary**					

ITEM	DESCRIPTION	UNIT	QTY	MATERIAL RATE	LABOUR RATE	AMOUNT
2.0.00	**Bill №: 02 - EXCAVATION AND FILLING**					
2.1.00	**GENERAL**					
	(a) Rates shall include for: leveling, grading, trimming, compacting to faces of excavation, keep sides plumb, backfilling, consolidating, and disposing surplus soil.					
2.2.00	**DEMOLITION**					
2.2.01	Demolition of existing building and trees. (Refer Site plan) (.Rate shall include for demolition and disposal of demolished materials	item	1.00			
2.3.00	**SITE CLEARING**					
2.3.01	Clear the area of site from rubbish and vegetable matters, stumps, roots. Rates shall include for removal of trees and tree stumps	m^2	357.90			
2.4.00	**EXCAVATION**					
	Excavation quantities are measured to the faces of concrete members. Rates shall include for all the additional excavation required to place the formwork. Rates shall include for backfilling.					
2.4.01	Excavation for Foundation pads	m^3	117.54			
2.4.02	Excavation for Foundation beams	m^3	46.63			
2.4.03	Excavation for ramp / step wall	m^3	3.49			
2.5.00	**FILLING**					
	Rate shall include for: levelling, grading, trimming, compacting and similar					
2.5.01	Compacted earth filling under ground slab	m^2	322.72			
2.5.02	150mm thick coarse aggregate layer under foundation	m^2	322.72			
2.6.00	**DAMP-PROOF MEMBRANE**					
	Rate shall include for: dressing around and sealing to all penetrations,laps and turnups.					
2.6.01	Polythene damp proof membrane (500 gauge)	m^2	322.72			
2.6.02	Bituminous waterproofing membrane	m^2	397.32			
2.7.00	**DE-WATERING**					
2.7.01	De-watering the excavation until completion of concrete work as required	item	1.00			
2.8.0	**TOTAL OF BILL №: 02 - Carried Over To Summary**					

ITEM	DESCRIPTION	UNIT	QTY	MATERIAL RATE	LABOUR RATE	AMOUNT
3.0.00	**Bill №: 03 - INSITU CONCRETE WORKS**					
3.1.00	**GENERAL**					
	(a) Rates shall include for: placing in position, making good after removal of formwork, mortar touch up to all concrete and casting in all required items; additional concrete required to conform to structural and excavated tolerances					
	(b) Mix ratio for reinforced concrete shall be 1:2:3 and lean concrete shall be 1:2:6.					
	(c) All structural concrete shall be GRADE M25 and lean concrete shall be GRADE M15					
	(d) Rates shall include for: concrete, formwork, reinforcement, cleaning, fabrication, placing, the provision for all necessary temporary fixings and supports including tie wires and chair supports, laps, distribution bars and wastage.					
	(e) Rates shall include for: all necessary boarding, supports, erecting, framing, temporary cambering, cutting, perforations for reinforcing bars, bolts, straps, ties, hangers, pipes and removal of formwork.					
	(f) Rates shall include for: cleaning, fabrication, placing the provision for all necessary temporary fixings and supports including tie wires and chair supports, laps, distribution bars and wastage.					
	(g) All reinforcing bars shall be high strength bars.					
	(h) Slab soffits to be finished fairfaced, use plasteciser and formwork with reducing agent.					
	(i) All exposed & external concrete members shall be casted with masterpel 777 or equivalent water proofing chemical.					
	(j) Rate shall include for applying 2 coats of waterproofing chemical to substructure.(Below ground level).					
3.1.01	Allow for Concrete Testing.	item	1.00			
3.2.00	**MASS CONCRETE**					
	Quantity is measured to the edges of concrete foundation members. Rates shall be inclusive for any additional concrete required to place the formwork.					
3.2.01	50 mm Lean Concrete (Foundations)	m^3	6.57			
3.2.02	100 mm Lean Concrete (ramp wall)	m^3	0.39			
3.3.00	**REINFORCED INSITU CONCRETE**					
	SUB-STRUCTURE					
	FOUNDATION PADS					
3.3.01	2500 x 2500 x 400mm Foundation pads, F1	m^3	5.00			
3.3.02	2200 x 2200 x 350mm Foundation pads, F2	m^3	3.39			
3.3.03	1800 x 1800 x 300mm Foundation pads, F3	m^3	10.70			
3.3.04	1600 x 1600 x 300mm Foundation pads, F4	m^3	6.92			
3.3.05	1300 x 1300 x 300mm Foundation pads, F5	m^3	1.53			
3.3.06	900 x 900 x 300mm Foundation pads, F6	m^3	2.43			
	FOUNDATION BEAMS					
3.3.07	450 x 200 mm Foundation beam, TB	m^3	16.79			
	STAIR STARTER					
3.3.08	200 x 1252 mm Concrete stair starter	m^3	0.27			
3.3.09	200 x 1148 mm Concrete stair starter	m^3	0.25			
	COLUMNS					
3.3.10	225 x 400 mm Concrete columns C1	m^3	0.14			
3.3.11	225 x 400 mm Concrete columns C2	m^3	0.21			
3.3.12	225 x 300 mm Concrete columns C3	m^3	0.71			
3.3.13	200 x 200 mm Concrete columns C4	m^3	0.30			
3.3.14	200 x 300 mm Concrete columns C5	m^3	0.36			
3.3.15	150 x 150 mm Concrete columns SC	m^3	0.11			
3.4.00	**GROUND FLOOR**					

ITEM	DESCRIPTION	UNIT	QTY	MATERIAL RATE	LABOUR RATE	AMOUNT
	COLUMNS					
3.4.01	225 x 400 mm Concrete columns C1	m^3	0.47			
3.4.02	225 x 400 mm Concrete columns C2	m^3	0.71			
3.4.03	225 x 300 mm Concrete columns C3	m^3	2.46			
3.4.04	200 x 200 mm Concrete columns C4	m^3	1.04			
3.4.05	200 x 300 mm Concrete columns C5	m^3	1.25			
3.4.06	150 x 150 mm Concrete columns SC	m^3	0.36			
	SLABS					
3.4.07	100 mm thk Concrete Slab on ground	m^3	31.69			
3.4.08	100 mm thk Concrete Slab on ramp	m^3	0.58			
3.4.09	150 mm thk Concrete Slab on half landing	m^3	1.98			
	STAIRCASE					
3.4.09	Concrete staircase GF to FFL -400	m^3	0.40			
3.4.10	Concrete staircase GF to 1st FL	m^3	3.77			
	HALF LANDING BEAMS					
3.4.11	400 x 200 mm Beam B2	m^3	0.45			
3.4.12	400 x 200 mm Beam B3	m^3	0.30			
3.5.00	**FIRST FLOOR**					
	COLUMNS					
3.5.01	225 x 400 mm Concrete columns C1	m^3	0.47			
3.5.02	225 x 400 mm Concrete columns C2	m^3	0.71			
3.5.03	225 x 300 mm Concrete columns C3	m^3	2.46			
3.5.04	200 x 200 mm Concrete columns C4	m^3	1.04			
3.5.05	200 x 300 mm Concrete columns C5	m^3	1.25			
3.5.06	150 x 150 mm Concrete columns SC	m^3	0.24			
	SLABS					
3.5.07	180 mm thk Concrete Slab on first floor	m^3	32.85			
3.5.08	135 mm thk Concrete Slab on first floor	m^3	16.12			
3.5.09	150 mm thk Concrete Slab on half landing	m^3	1.98			
	BEAMS					
3.5.10	475 x 200 mm Beam B1	m^3	1.75			
3.5.11	400 x 200 mm Beam B2	m^3	4.21			
3.5.12	400 x 200 mm Beam B3	m^3	1.37			
3.5.13	400 x 200 mm Beam B4	m^3	1.52			
3.5.14	350 x 180 mm Beam HB	m^3	0.74			
	HALF LANDING BEAMS					
3.5.15	400 x 200 mm Beam B2	m^3	0.45			
3.5.16	400 x 200 mm Beam B3	m^3	0.30			
	RC WALL					
3.5.17	100mm thk 100mm high RC starter	m^3	0.33			
	STAIRCASE					
3.5.18	Concrete staircase GF to 1st FL	m^3	3.77			
3.6.00	**SECOND FLOOR**					
	COLUMNS					
3.6.01	225 x 400 mm Concrete columns C1	m^3	0.56			
3.6.02	225 x 400 mm Concrete columns C2	m^3	0.84			
3.6.03	225 x 300 mm Concrete columns C3	m^3	2.94			
3.6.04	200 x 200 mm Concrete columns C4	m^3	1.25			
3.6.05	200 x 300 mm Concrete columns C5	m^3	1.50			
3.6.06	150 x 150 mm Concrete columns SC	m^3	0.42			
	SLABS					

ITEM	DESCRIPTION	UNIT	QTY	MATERIAL RATE	LABOUR RATE	AMOUNT
3.6.07	180 mm thk Concrete Slab on first floor	m^3	32.85			
3.6.08	135 mm thk Concrete Slab on first floor	m^3	16.12			
3.6.09	150 mm thk Concrete Slab on half landing	m^3	1.98			
	BEAMS					
3.6.10	475 x 200 mm Beam B1	m^3	1.75			
3.6.11	400 x 200 mm Beam B2	m^3	4.21			
3.6.12	400 x 200 mm Beam B3	m^3	1.37			
3.6.13	400 x 200 mm Beam B4	m^3	1.52			
3.6.14	350 x 180 mm Beam HB	m^3	0.74			
	RC WALL					
3.6.15	100mm thk 100mm high RC starter	m^3	0.33			
3.7.00	**ROOF LEVEL - 01**					
	BEAMS					
3.7.01	300 x 200 mm Beam RB	m^3	2.46			
3.8.00	**ROOF LEVEL - 02**					
	BEAMS					
3.8.01	300 x 200 mm Beam RB	m^3	7.00			
3.9.00	**OTHER WORKS**					
	Lintel and Sill beams					
3.9.01	150 x 150 mm Beam LT1	item	1.00			
3.9.02	300 x 150 mm Beam LT2	item	1.00			
	SHADING					
3.9.03	120 mm thk Concrete shading @ 1st slab level	item	1.00			
3.9.04	120 mm thk Concrete shading @ 2nd slab level	item	1.00			
3.9.05	120 mm thk Concrete shading @ roof beam level	item	1.00			
	FIN					
3.9.06	150 x 62 mm RC fin @ ground floor	item	1.00			
3.9.07	150 x 62 mm RC fin @ 1st floor	item	1.00			
3.9.08	150 x 62 mm RC fin @ 2nd floor	item	1.00			
	RC WALL					
3.9.09	120 mm thk Concrete side wall @ ground level	item	1.00			
3.9.10	120 mm thk Concrete side wall @ 1st floor level	item	1.00			
3.9.11	120 mm thk Concrete side wall @ 2nd floor level	item	1.00			
	GROUND WELL					
3.9.12	1000 mm dia. RC ground well	item	1.00			

ITEM	DESCRIPTION	UNIT	QTY	MATERIAL RATE	LABOUR RATE	AMOUNT
3.10.00	TOTAL OF BILL №: 03 - Carried Over To Summary					

ITEM		DESCRIPTION	UNIT	QTY	MATERIAL RATE	LABOUR RATE	AMOUNT
4.0.00		**Bill №: 04 - MASONRY**					
4.1.00	**GENERAL**						
	(a)	Rates shall include for: cleaning out cavities, forming rebated reveals and pointing and cleaning down to reveals where necessary; fractional size blocks, all necessary machine cutting, cutting or forming chases or edges of floor slabs, cutting or leavingholes and openings as recesses for and building in pipes, conduits, sleeves and similar as required for all trades; leaving surfaces rough or raking out joints for plastering and flashing, bedding frames or plates, building in joists, bearers or similar, temporary supports to openings, templates, reinforcement in walls and for all necessary making good.					
4.2.00	**BLOCK WORK**						
		Cement block wall, bricks laid to form alternate courses of headers and stretchers, laid on and inc. mortar. (EXTERNAL WALLS)					
	150	mm thk full height					
4.2.01		GROUND FLOOR	m^2	87.20			
4.2.02		FIRST FLOOR	m^2	91.63			
4.2.03		SECOND FLOOR	m^2	120.54			
	150	mm thk full height					
4.2.04		BELOW GROUND FLOOR	m^2	93.87			
		Cement block wall, bricks laid to form alternate courses of headers and stretchers, laid on and inc. mortar (INTERNAL WALLS).					
	150	mm thk full height					
4.2.05		GROUND FLOOR	m^2	174.74			
4.2.06		FIRST FLOOR	m^2	233.14			
4.2.07		SECOND FLOOR	m^2	199.04			
	100	mm thk full height					
4.2.08		GROUND FLOOR	m^2	10.72			
4.2.09		FIRST FLOOR	m^2	6.77			
4.2.10		SECOND FLOOR	m^2	7.07			
		Cement block wall, bricks laid to form alternate courses of headers and stretchers, laid on and inc. mortar (INTERNAL WALLS).					
	100	mm thk 2.4m height					
4.2.11		GROUND FLOOR	m^2	15.72			
4.2.12		SECOND FLOOR	m^2	30.96			
		Cement block wall, bricks laid to form alternate courses of headers and stretchers, laid on and inc. mortar (RAMP)					
	150	mm thk wall					
4.2.13		RAMP	m^2	15.48			

ITEM	DESCRIPTION	UNIT	QTY	MATERIAL RATE	LABOUR RATE	AMOUNT
4.3.00	**TOTAL OF BILL №: 04 - Carried Over To Summary**					

ITEM	DESCRIPTION	UNIT	QTY	MATERIAL RATE	LABOUR RATE	AMOUNT
5.0.00	**Bill №: 05 - STRUCTURAL METAL WORKS**					
5.1.00	**GENERAL**					
	(a) Rates shall include for: all fabrication work, welding, marking, drilling for bolts incl. those securing timbers, steel plates, bolts, nuts and any type of washer, riveted work, counter sinking and tapping for bolts or machine screws.					
	(b) Rates shall include for fabrication and erection and temporary supports and fixing into position.					
	(c) “Welding” is deemed to be in accordance with the specification and for the material to which it is to be used. Gusset plates, shoe plates, ends, caps, cleats, brackets, stiffeners, bolts, etc.,are required to be included to the rate of the associated steel work in which they occur.					
	(d) For the description of materials and workmanship refer to the Specification of works, pricing Preambles and Drawings.					
	(e) Contractor shall submit shop drawings for approval prior to fabrication.					
	(f) Unless specified otherwise, rate shall include for: All shop fabrication work, marking, delivery, unloading, hoisting, erecting and fixing as per detail drawings, All welds & allowance for rolling margin, the weight of weld metal in welded constructions, members of any length, cutting to size and shape and joints in the running length, grinding to a smooth finish, unless otherwise required, Machine drilled bolt, holes, bolts, nuts and washers, cleats, shoe and gusset plates and all other connections, Wire brushing to clean all the steel surfaces (except stainless steel) after fabrication and spray painting with two coats of quick drying metal primer zinc phosphate & two coats of matt anti corrosive paint with final paint, all necessary accessories and preparation and submission of Shop Drawings and As Built Drawings as specified.					
5.2.00	**STEEL TRUSS**					
	TRUSS TR1					
5.2.01	Steel truss 11.525m span with 60.3mm dia x 3.2mm thick CHS pipe top and bottom chord and 42.4mm dia. x 2.0mm thick CHS pipe web members	no	10.00			
	STEEL FRAMING					
5.2.02	60.3mm dia x 3.2mm thick GI bracing beam	m	58.85			
5.2.03	50 x 100 x 2.5mm 'C' Purlins at 900 c/c	m	441.36			

ITEM	DESCRIPTION	UNIT	QTY	MATERIAL RATE	LABOUR RATE	AMOUNT
5.3.00	TOTAL OF BILL №: 05 - Carried Over To Summary					

ITEM	DESCRIPTION	UNIT	QTY	MATERIAL RATE	LABOUR RATE	AMOUNT
6.0.00	**Bill №: 06 - ROOFING**					
6.1.00	**GENERAL**					
	(a) Rates shall include for: fair edges, dressing over angel fillets, roof sealant, turning into grooves, all other labours, circular edges, nails, screws and other fixings and laps.					
6.2.00	**MAIN ROOF COVERING**					
6.2.01	Lysaght roofing sheet to specification	m²	360.15			
6.2.02	50mm mineral wool insulation with reflective layers on both installed as per suppliers specifications with recommended lap length and air gap tape. Rate shall include for BRC mesh over purlins to support insulation layer.	m²	360.15			
6.3.00	**CAPPING**					
6.3.01	Lysaght ridge cap as per roofing sheet suppliers assembly	m	29.43			
6.4.00	**GUTTER**					
6.4.01	200 x 200 mm Zinc Aluminium gutter to dimensions specified by service engineer	m	58.85			
6.5.00	**DOWN PIPE**					
6.5.01	82 mm dia rain water pipe	item	1.00			
6.5.02	50 mm dia rain water pipe	item	1.00			
6.5.03	50 mm dia rain water outlet					
6.6.00	**FASCIA**					
6.6.01	50 x 200 mm fascia board	m	83.25			

ITEM	DESCRIPTION	UNIT	QTY	MATERIAL RATE	LABOUR RATE	AMOUNT
6.7.00	TOTAL OF BILL №: 06 - Carried Over To Summary					

ITEM	DESCRIPTION	UNIT	QTY	MATERIAL RATE	LABOUR RATE	AMOUNT
7.0.00	**Bill №: 07 - WINDOWS, SCREENS & LIGHTS**					
7.1.00	**GENERAL**					
	(a) Rates shall include for locks, latches, closers, push plates, pull handles, bolts, kick plates, hinges and all door & window hardware.					
	(b) Rates shall include for door frames, mullions, transoms, trims, glazing, tinting, timber panels, boardings, framing, lining, fastenings and all fixings.					
	(c) Sizes are given overall outside dimensions of actual doors and windows.					
	(d) Thickness and sizes of glass panels are shown on the Drawings and doors and windows schedule					
	(e) Rates shall include for all painting as specified					
	(f) Rates shall include all items specified in the door schedule and specification.					
	(g) Frames and sashes to be 25-60 micron white powder coated aluminium other wise specified.					
7.2.00	**WINDOWS**					
	GROUND FLOOR					
7.2.01	1525 x 1300 W1 - Aluminium sliding window with clear glass panel on aluminium frame	nr	6.00			
7.2.02	2450 x 1535 W2 - Aluminium side/top hung window with reflective glass panel on aluminium frame	nr	6.00			
7.2.03	650 x 785 W3 - Aluminium window with aluminium louvers on aluminium frame	nr	4.00			
7.2.04	3000 x 600 V1 - Aluminium window with aluminium louvers on aluminium frame	nr	7.00			
7.2.05	2975 x 600 V2 - Aluminium window with aluminium louvers on aluminium frame	nr	1.00			
7.2.06	1875 x 600 V3 - Aluminium window with aluminium louvers on aluminium frame	nr	2.00			
7.2.07	2550 x 600 V4 - Aluminium window with aluminium louvers on aluminium frame	nr	1.00			
	FIRST FLOOR					
7.2.08	1525 x 1300 W1 - Aluminium sliding window with clear glass panel on aluminium frame	nr	8.00			
7.2.09	2450 x 1535 W2 - Aluminium side/top hung window with reflective glass panel on aluminium frame	nr	6.00			
7.2.10	650 x 785 W3 - Aluminium window with aluminium louvers on aluminium frame	nr	7.00			
7.2.11	1200 x 1535 W4 - Aluminium side/top hung window with reflective glass panel on aluminium frame	nr	1.00			
7.2.12	3000 x 600 V1 - Aluminium window with aluminium louvers on aluminium frame	nr	7.00			
7.2.13	2975 x 600 V2 - Aluminium window with aluminium louvers on aluminium frame	nr	1.00			
7.2.14	2550 x 600 V4 - Aluminium window with aluminium louvers on aluminium frame	nr	1.00			
	SECOND FLOOR					
7.2.15	1525 x 1300 W1 - Aluminium sliding window with clear glass panel on aluminium frame	nr	6.00			
7.2.16	2450 x 1535 W2 - Aluminium side/top hung window with reflective glass panel on aluminium frame	nr	6.00			
7.2.17	650 x 785 W3 - Aluminium window with aluminium louvers on aluminium frame	nr	2.00			
7.2.18	1200 x 1535 W4 - Aluminium side/top hung window with reflective glass panel on aluminium frame	nr	1.00			
7.2.19	3000 x 600 V1 - Aluminium window with aluminium louvers on aluminium frame	nr	7.00			
7.2.20	2975 x 600 V2 - Aluminium window with aluminium louvers on aluminium frame	nr	1.00			
7.2.21	2550 x 600 V4 - Aluminium window with aluminium louvers on aluminium frame	nr	1.00			

ITEM	DESCRIPTION	UNIT	QTY	MATERIAL RATE	LABOUR RATE	AMOUNT
7.3.00	**TOTAL OF BILL №: 07 - Carried Over To Summary**					

ITEM	DESCRIPTION	UNIT	QTY	MATERIAL RATE	LABOUR RATE	AMOUNT
8.0.00	**Bill №: 08 - DOORS, SHUTTERS & HATCHES**					
8.1.00	**GENERAL**					
	(a) Rates shall include for locks, latches, closers, push plates, pull handles, bolts, kick plates, hinges and all door & window hardware.					
	(b) Rates shall include for door frames, mullions, transoms, trims, glazing, tinting, timber panels, boardings, framing, lining, fastenings and all fixings.					
	(c) Sizes are given overall outside dimensions of actual doors and windows.					
	(d) Thickness and sizes of glass panels are shown on the Drawings and doors and windows schedule.					
	(e) Rates shall include for all painting as specified					
	(f) Rates shall include all items specified in the door schedule and specification.					
	(g) Frames and sashes to be 25-60 micron white powder coated aluminium other wise specified.					
8.2.00	**DOORS**					
	GROUND FLOOR					
8.2.01	1000 x 2300 D1 - Aluminium panel door on Aluminium frame (single swing)	nr	6.00			
8.2.02	1000 x 2300 D2 - Aluminium panel door on Aluminium frame (single swing)	nr	3.00			
8.2.03	900 x 2200 D3 - PVC panel door on PVC frame (single swing)	nr	2.00			
8.2.04	700 x 2000 D4 - PVC panel door on PVC frame (single swing)	nr	3.00			
8.2.05	1000 x 2300 D5 - Aluminium panel door on Aluminium frame (single swing)	nr	1.00			
	FIRST FLOOR					
8.2.06	1000 x 2300 D1 - Aluminium panel door on Aluminium frame (single swing)	nr	5.00			
8.2.07	900 x 2200 D3 - PVC panel door on PVC frame (single swing)	nr	4.00			
8.2.08	700 x 2000 D4 - PVC panel door on PVC frame (single swing)	nr	7.00			
	SECOND FLOOR					
8.2.09	1000 x 2300 D1 - Aluminium panel door on Aluminium frame (single swing)	nr	7.00			
8.2.10	900 x 2200 D3 - PVC panel door on PVC frame (single swing)	nr	2.00			
8.2.11	700 x 2000 D4 - PVC panel door on PVC frame (single swing)	nr	6.00			
8.2.12	1000 x 2300 D2 - Aluminium panel door on Aluminium frame (single swing)	nr	2.00			

ITEM	DESCRIPTION	UNIT	QTY	MATERIAL RATE	LABOUR RATE	AMOUNT
8.3.00	**TOTAL OF BILL №: 08 - Carried Over To Summary**					

ITEM	DESCRIPTION	UNIT	QTY	MATERIAL RATE	LABOUR RATE	AMOUNT
9.0.00	**Bill №: 09 - FLOOR, WALL, CEILING, AND ROOF FINISHINGS**					
9.1.00	**GENERAL**					
	(a) Rates shall include for: fixing, bedding, grouting, and pointing materials; making good around pipes, sanitary fixtures, and similar; cleaning down and polishing.					
	(b) "Masterseal 588" or equivalent should be applied on top of screeds and walls upto 300mm in all toilets.					
	(c) All external surface of masonry wall should be waterproofed with"Masterseal 588" or equivalent					
9.2.00	**PLASTERING**					
	20 mm thk cement plaster on both surface as specified on the drawing.					
9.2.01	BELOW GROUND FLOOR	m^2	187.74			
	20 mm thk cement plaster on external surface as specified on the drawing.					
9.2.02	RAMP	m^2	30.96			
9.2.03	GROUND FLOOR	m^2	87.20			
9.2.04	FIRST FLOOR	m^2	91.63			
9.2.05	SECOND FLOOR	m^2	120.54			
	16 mm thk cement plaster on internal surface as specified on the drawing					
9.2.05	GROUND FLOOR	m^2	489.56			
9.2.06	FIRST FLOOR	m^2	571.45			
9.2.07	SECOND FLOOR	m^2	594.68			
9.3.00	**CEMENT SCREED**					
	50 mm thk cement screed					
9.3.01	GROUND FLOOR	m^2	204.21			
9.3.02	FIRST FLOOR	m^2	164.80			
9.3.03	SECOND FLOOR	m^2	198.74			
	2.5 Cement screed with 2.5mm self levelling cement screed					
9.3.04	GROUND FLOOR	m^2	5.82			
	25 mm thk cement screed					
9.3.05	GROUND FLOOR	m^2	94.24			
9.3.06	FIRST FLOOR	m^2	78.11			
9.3.07	SECOND FLOOR	m^2	91.68			
9.4.00	**FLOOR TILING**					
	600 x 600 mm Homogenous Non-slip tiles					
9.4.01	GROUND FLOOR	m^2	204.21			
9.4.02	FIRST FLOOR	m^2	164.80			
9.4.03	SECOND FLOOR	m^2	198.74			
	600 x 600 mm Homogenous Non-slip tiles over 25mm screeding (cementitious waterproofing: MASTERPEL 588 or equivalent on top of the slab					
9.4.04	GROUND FLOOR	m^2	67.32			
9.4.05	FIRST FLOOR	m^2	59.20			
9.4.06	SECOND FLOOR	m^2	59.20			
	300 x 300 mm Homogenous Non-slip tiles					
9.4.07	GROUND FLOOR	m^2	26.92			
9.4.08	FIRST FLOOR	m^2	18.91			
9.4.09	SECOND FLOOR	m^2	32.48			
9.5.00	**WALL TILING**					
	300 x 600 mm Homogenous tiles					
9.5.01	GROUND FLOOR	m^2	109.44			

ITEM	DESCRIPTION	UNIT	QTY	MATERIAL RATE	LABOUR RATE	AMOUNT
9.5.02	FIRST FLOOR	m^2	96.96			
9.5.03	SECOND FLOOR	m^2	128.16			
9.6.00	**FLOOR PAINTING**					
	Epoxy floor paint					
9.6.01	GROUND FLOOR	m^2	5.82			
9.7.00	**STEP TILING**					
9.7.01	Ground floor to Store room	item	1.00			
9.7.02	Ground floor to first floor	item	1.00			
9.7.03	First floor to second floor	item	1.00			
9.8.00	**SKIRTING**					
	120-150 mm Homogenous tile skirting					
9.8.01	GROUND FLOOR	item	1.00			
9.8.02	FIRST FLOOR	item	1.00			
9.8.03	SECOND FLOOR	item	1.00			

ITEM	DESCRIPTION	UNIT	QTY	MATERIAL RATE	LABOUR RATE	AMOUNT
9.9.00	**TOTAL OF BILL №: 09 - Carried Over To Summary**					

ITEM	DESCRIPTION	UNIT	QTY	MATERIAL RATE	LABOUR RATE	AMOUNT
10.0.00	**Bill №: 10 - SUSPENDED CEILING**					
10.1.00	**GENERAL**					
	(a) Rates shall include for: all labour in framing, notching and fitting around projections, pipes, light fittings, hatches, grilles and similar and complete with cleats, packers, wedges and similar and all nails and screws.					
10.2.00	**PLASTERBOARD/ CEMENT BOARD CEILING**					
	Fixed "Boral" or equivalent plasterboard ceiling system with timber framing					
10.2.01	SECOND FLOOR	m^2	215.00			
	6mm Cement board ceiling on roof eave / gable ceiling / toilet and science lab area					
10.2.02	GROUND FLOOR	m^2	79.73			
10.2.03	FIRST FLOOR	m^2	214.93			
10.2.04	SECOND FLOOR	m^2	131.60			

ITEM	DESCRIPTION	UNIT	QTY	MATERIAL RATE	LABOUR RATE	AMOUNT
10.3.00	TOTAL OF BILL №: 10 - Carried Over To Summary					

ITEM	DESCRIPTION	UNIT	QTY	MATERIAL RATE	LABOUR RATE	AMOUNT
11.0.00	**Bill №: 11 - PAINTING & DECORATIONS**					
11.1.00	**GENERAL**					
	(a) Rates shall include for: the provision, erection and removal of scaffolding, preparation, wall putty application, rubbing down between coats and similar work, the protection and/or masking floors, fittings and similar work, removing and replacing door & window furniture					
	(b) All painting work shall be carried in accordance with the Specifications.					
11.2.00	**WALL PAINTING**					
	Weatherbound paint finish as specified (EXTERNAL SURFACES)					
11.2.01	GROUND FLOOR	m^2	118.75			
11.2.02	FIRST FLOOR	m^2	123.18			
11.2.03	SECOND FLOOR	m^2	152.70			
	Emulsion paint finish including putty application on brick walls as specified (INTERNAL SURFACES)					
11.2.04	GROUND FLOOR	m^2	557.25			
11.2.05	FIRST FLOOR	m^2	663.75			
11.2.06	SECOND FLOOR	m^2	657.10			
11.3.00	**CEILING PAINTING**					
	Weatherbound paint finish as specified (SLAB SOFFIT)					
11.3.01	GROUND FLOOR	m^2	234.20			
11.3.02	FIRST FLOOR	m^2	92.88			
	Emulsion paint finish including putty application on ceiling as specified (CEILING)					
11.3.03	GROUND FLOOR	m^2	79.73			
11.3.04	FIRST FLOOR	m^2	214.93			
11.3.05	SECOND FLOOR	m^2	346.60			

ITEM	DESCRIPTION	UNIT	QTY	MATERIAL RATE	LABOUR RATE	AMOUNT
11.4.00	**TOTAL OF BILL №: 11 - Carried Over To Summary**					

ITEM	DESCRIPTION	UNIT	QTY	MATERIAL RATE	LABOUR RATE	AMOUNT
12.0.00	**Bill №: 12 - STAIRS, WALKWAYS AND BALUSTRADES**					
12.1.00	**GENERAL**					
	(a) Rates shall include for: all fabrication work, welding, marking, drilling for bolts incl. those securing timbers, steel plates, bolts, nuts and any type of washer, riveted work, counter sinking and tapping for bolts or machine screws.					
	(b) Rates shall include for fabrication and erection and temporary supports and fixing into position.					
12.2.00	**RAMP RAILING**					
	50mm dia (1.5-2mm thk) SS 304 handrail at 900mm height as per drawing					
12.2.01	RAMP	m	6.20			
12.3.00	**STAIRCASE RAILING**					
	25 & 50mm dia GI powder coated handrail at 900mm height as per drawing					
12.3.01	GROUND - 1ST FLOOR	m	7.80			
12.3.02	1ST - 2ND FLOOR	m	7.80			
12.4.00	**WALKWAY RAILING**					
	25 & 50 mm dia (1.5-2mm thk) SS 304 hollow pipe handrail at 1100mm height as per drawing					
12.4.01	FIRST FLOOR	m	26.53			
12.4.02	SECOND FLOOR	m	26.53			
12.4.00	**NAME BOARD**	Item	1.00			

ITEM	DESCRIPTION	UNIT	QTY	MATERIAL RATE	LABOUR RATE	AMOUNT
12.5.00	**TOTAL OF BILL №: 12 - Carried Over To Summary**					

ITEM	DESCRIPTION	UNIT	QTY	MATERIAL RATE	LABOUR RATE	AMOUNT
13.0.00	**Bill №: 13 - MECHANICAL & ELECTRICAL SERVICES**					
13.1.00	**GENERAL**					
	(a) Design, provide and install electrical network for the entire building complete in accordance to standards set by the local governing body STELCO/FENAKA					
	(b) The following items and description and the drawings are given as a guidance as to the nature of the information required to be returned by the contractor. Should they not be appropriate the contractor should provide a similar BOQ using the Additions/Ommisions sheets provided at the back of this BOQ					
	(c) The cost shall include for: screws, nails, bolts, nuts, standard cable fixing or supporting clips, brackets, straps, rivets, plugs and all incidental accessories.					
	(d) Rate shall include for necessary chasings, trenching, conduits, cables, cable trays, fittings and clips, cutting holes and chases in brick work/ block work/ concrete work complete with all necessary accessories such as sockets, connections, cable glands and boxes, hardware clips, soldering and jointing materials etc., for proper installing and laying of cables					
	(e) Rates for electrical isolators, conduits, fittings, equipment and similar items shall include for: all fixings to various building surfaces.					
	(f) A light fixture is measured as one point; switch end of wire is not included in the quantity.					
	(g) A point wiring for power points is measured (regardless of 1 gang, 2 gang etc) as one point for each socket outlet; other end of wire is not included in the quantity.					
	(h) All under ground cables directly buried in ground/run in trenches to be properly laid and covered with cable tiles/trench covers. Rate for under ground cables shall include for all necessary excavation, sand layers, concrete tiles, warning strips and back filling with approved quality earth properly compacted, hot dipped galvenized brackets for trenches, accessories, etc as applicable.					
	(i) The contractors are requested to refer Conditions of Contract, Special Conditions of Contract, Drawings and Specification and other relevant documents related to this tender prior to pricing of the following items					
	(j) The contractor shall provide a schedule of all builder's work in connection with details of such items as necessary, along with the tender.					
	(k) Rates for materials/ plants/ equipments not approved for duty free facilities to be quoted on duty paid basis.					
	(l) All equipments shall be guaranteed for a period of 12 months from the date of commissioning or date of practical completion of the project which ever later					
	(m) The rate shall include for insurance during handling, rehandling, transport, storage until ready for installation, delivery of equipments up to the point of installation and until handing over.					
	(n) The rates shall include for comprehensive maintenance during defects liability period of 12 months from the date of handing over					
	(o) The tenderer shall submit the following information on the items/equipments quoted for together with the tender.					
	a. make					
	b. model No.					
	c. technical data					
	d. country of manufacture					
	e. delivery period					
	f. lead time for manufacturing.					
	g. port of shipping					
	h. CIF value of each item in foreign currency.					
	j. Optional items and their additional cost. (additional cost to be submitted separately)					
	k. Schedule of items to be carried out by others connected to installation of generators/transformers/Electrical panels					

ITEM	DESCRIPTION	UNIT	QTY	MATERIAL RATE	LABOUR RATE	AMOUNT
	such as some builders work and electrical connection. l. Details of all special features m. schedule attached to specification.					
	(p) Rate for all electrical panels shall include for supply and installation of all necessary MCCBs, MCBS, EFRs, ELCBs, auxiliary contacts, Voltmeters, ammeters, Digital analyser,kWh meters, indicator lamps, selector switches, copper bus bars, inter locks, aligning and grounding of the panel, inter connectors, internal wiring connections to switch gear,steel channels and necessary hardware fixing insulating materials,all in fully enclosed metal clad panels and distribution boards completed as shown in drawing. They shall comply with the specifications andI.E.E.regulations and be complete to working order to the approval of local authorities.					
	(q) Rate shall include for supply, installation, maintaining, testing and commissioning of the system for power and lighting according to drawings and specifications to working order.					
	(r) All materials, equipment wiring shall confirm to local codes, specifications, standards/latest I.E.E. regulations (BS 7671).					
13.2.00	**MAIN DISTRIBUTION, SUB DISTRIBUTION AND DISTRIBUTION SYSTEM**					
	Main Distribution Board(MDB) and Sub-distribution Boards (DBs)					
	Distribution Panel for each floor as shown on the drawing, complete with all incoming and outgoing MCBs, RCCBs, etc any other item required to working order, wall mounted wall mount steel powder coated, IP44 enclouser with neutral link, earth bar and required accessories, all complete as per the specifications & drawings.					
13.2.01	Supply and installation of Main panel board with KWh meter	nr	1.00			
13.2.02	Distribution Boards	nr	5.00			
13.2.03	Internet switch board	nr	1.00			
	MAIN / SUB CABLING					
	All under ground cables directly buried in ground/ in the trenches as appilcable, to be laid properly and covered with cable tiles, protection tapes, etc for mechanical protection, PVC sleeves may use if required. Rate shall include for all necessary works/accessories such as excavation, sand layers, cable tiles, warning strips and back filling with approved quality earth,properly compacted, to the satisfication of the Engineer					
	All above ground cables shall be laid on cable tray/ trucnking /conduits as appilcable and covered by tray covers, etc. for mechanical protection. PVC sleeves may use if required. Rate shall include for all necessary works/ accessories such as galvernized brackets, supporting materials, fittings, nails, cable ties, earthing, etc, trays shall be of required sizes, GI powder coated, and shotted, to the satisfication of Engineer					
	CABLING UP TO MDB					
13.2.04	Feeder cable	item	1.00			
13.2.05	Cabling from Main Panel Board to DBs	item	1.00			
13.2.06	Cabling from main internet source to internet switch board	item	1.00			
13.3.00	**GENERAL EARTHING**					
13.3.01	Allow for the total earthing system inclusive of the necessary cables from all the DBs	item	1.00			
13.4.00	**POINT WIRING AND FITTINGS**					
	Rate shall include for supply & installation of cable, conduits for point wiring in concealed installations including lights,switches, power outlet,data points,isolators, etc, all as specified in the drawing					

ITEM	DESCRIPTION	UNIT	QTY	MATERIAL RATE	LABOUR RATE	AMOUNT
13.4.01	Supply and Installation of 2 x 1C 1.5mm2 PVC/PVC/Cu + 2.5mm2 PVC/Cu earth cable c/w uPVC conduit, junction boxes etc. for lights and switches point wiring	nr	322.00			
13.4.02	Supply and Installation of 2 x 1C 2.5mm2 PVC/PVC/Cu + 2.5mm2 PVC/Cu earth cable c/w uPVC conduit, junction boxes,ethernet cables, RJ45 Connectors, VGA cables etc. for the Socket outlets point wiring	nr	276.00			
13.5.00	**LIGHTS, SWITCHES AND SOCKETS**					
	Rate shall include supply and installation of following lighting fixtures, socket outlets as specified and detailed, fixed in position including all fixing accessories, supports and connect to power, under following conditions					
	1. All bathrooms, out door light fixtures shall be IP65					
	2. All switches & sockets shall be ABB or equivalent brand.					
	LIGHTS AND SWITCHES					
13.5.01	Outdoor wall light 40W (IP65)	nr	34.00			
13.5.02	Mirror light (7W LED light)	nr	10.00			
13.5.03	Recessed Down light 12W LED	nr	27.00			
13.5.04	Ceiling light 18W LED	nr	15.00			
13.5.05	LED tube light with weather proof opal casing	nr	7.00			
13.5.06	LED tube light with opal casing	nr	75.00			
13.5.07	Ceiling fan (52" - 54")	nr	28.00			
13.5.08	Light switch (1 G)	nr	28.00			
13.5.09	Light switch (2 G)	nr	25.00			
13.5.10	Light switch (3 G)	nr	8.00			
13.5.11	Light switch (4 G)	nr	14.00			
13.5.12	Light switch (5 G)	nr	3.00			
13.5.13	Exhaust fan	nr	1.00			
13.5.14	Emergency Lights	nr	20.00			
13.5.15	Exit lights	nr	24.00			
13.5.16	Flex outlet	nr	4.00			
	SOCKETS					
13.5.16	13 A twin sockets outlet	nr	133.00			
13.5.17	13 A single socket outlet	nr	34.00			
13.5.18	15 Switched / Spur Unit @H.L	nr	14.00			
13.5.19	Twin compute network outlet	nr	7.00			
13.5.20	Data points	nr	7.00			
13.5.21	HDMI,VGA & RAC AV Sockets	nr	6.00			
13.5.22	HDMI,VGA & RAC AV Twin Sockets	nr	6.00			
13.5.23	Volume controller	nr	1.00			
13.5.24	Speakers	nr	14.00			
13.5.25	Paging mic	nr	1.00			
13.5.26	Two gang TV/SAT socket outlet	nr	6.00			
13.5.27	Telephone outlet (RJ11, connector)	nr	14.00			
13.5.28	Computer network outlet (RJ11, connector)	nr	28.00			
13.5.29	Phone extension	nr	5.00			
	A/C WORKS					
13.5.29	Supply and Installation of Ac in science lab room and in office as specified in detail drawing					
13.5.30	SINGLE SPLIT AC 24,000 BTU	nr	8.00			
13.5.31	SINGLE SPLIT AC 18,000 BTU	nr	1.00			
13.5.32	SINGLE SPLIT AC 12,000 BTU	nr	1.00			
	SINGLE SPLIT AC 8,000 BTU	nr	4.00			

ITEM	DESCRIPTION	UNIT	QTY	MATERIAL RATE	LABOUR RATE	AMOUNT
13.6.00	**TOTAL OF BILL №: 13 - Carried Over To Summary**					

ITEM	DESCRIPTION	UNIT	QTY	MATERIAL RATE	LABOUR RATE	AMOUNT
14.0.00	**Bill №: 14 - PLUMBING**					
14.1.00	**GENERAL**					
	(a) Rates shall include for sockets, running joints, connectors, elbows, junctions, valves, reducers, expansion joints, backnuts and similar, incidental fitting, clips saddles, brackets, straps, hangers, screws, nails and fixing complete, including cutting and forming holes, excavating, laying pipes and backfilling trenches.					
	(b) All pipe work and fittings shall be high pressure PVC.					
	(c) Rates shall include for supply and fixing of all pipes.					
	(d) All sanitary fixtures used shall be of superior quality and approved by the architect/consultant on submission of samples.					
14.2.00	**WATER SUPPLY**					
	Provide and fix UPVC high pressure pipes including piping, connections, fittings, valves, excavations, ducting, fixing with brackets and leak testing.					
	INTERNAL PLUMBING - FRESH WATER SUPPLY PIPE					
14.2.01	Note: Internal plumbing to all toilets, and lab sink including supply and laying of pipes.	item	1.00			
	EXTERNAL PLUMBING					
14.2.02	All pipe works under groundfloor screed/slab to be laid for Waste water, sewage, fresh water and well water connection.	item	1.00			
14.2.03	Waste water and sewage connection from all the toilets and lab sink including the necessary catch pits and manholes as necessary. Rates shall include for supply and laying of pipes including clean-outs as necessary.	item	1.00			
14.2.04	Water connection to all toilets. Rate shall include for supply and laying of pipes.	item	1.00			
14.3.00	**DISCHARGE WORK**					
14.3.01	Provide and fix UPVC pipes including vent pipes, vent cowls, cleaning eye, connections, fittings, valves, excavations, ducting, fixing with brackets, connecting to proposed septic tank and leak testing as specified in the detail drawing.	item	1.00			
14.4.00	**FIXTURES**					
	Complete installation, cleaning and testing of:					
14.4.01	Wash basin	nr	12.00			
14.4.02	Wash basin tap	nr	12.00			
14.4.03	Muslim shower with stop valve	nr	14.00			
14.4.04	Soap holder	nr	14.00			
14.4.05	Floor Drain	nr	11.00			
14.4.06	Floor Gully	nr	11.00			
14.4.07	510 x 1118 Face Mirror	nr	12.00			
14.4.08	Water Closet	nr	14.00			
14.4.09	1863 x 600 Counter top with tile finish	nr	1.00			
14.4.10	1000 x 600 Counter top with tile finish	nr	1.00			
14.4.11	1875 x 600 Counter top with tile finish	nr	2.00			
14.4.12	1650 x 600 Counter top with tile finish	nr	2.00			
14.4.13	1200 x 600 Counter top with tile finish	nr	1.00			
14.4.14	Water booster pump	nr	1.00			
14.4.15	Water dispenser tap	nr	4.00			
	DISABLED TOILET					
14.4.16	Wash basin	nr	1.00			
14.4.17	Wash basin tap	nr	1.00			
14.4.18	Muslim shower with stop valve	nr	1.00			
14.4.19	Soap holder	nr	1.00			
14.4.20	510 x 1118 Face Mirror	nr	1.00			
14.4.21	Water Closet	nr	1.00			
14.4.22	SS Railings as per detailed drawing	nr	1.00			

ITEM	DESCRIPTION	UNIT	QTY	MATERIAL RATE	LABOUR RATE	AMOUNT
14.5.00	TOTAL OF BILL №: 14 - Carried Over To Summary					

ITEM	DESCRIPTION	UNIT	QTY	MATERIAL RATE	LABOUR RATE	AMOUNT
15.0.00	**Bill №: 15 - INSULATION, FIRE STOPPING & FIRE PROTECTION**					
15.1.00	**GENERAL**					
	(a) Rates shall include for: cabinet,screws, nails, bolts, nuts, standard cable fixing or supporting clips, brackets, straps, rivets, plugs and all incidental accessories					
	(b) Rates shall include for cable conduits, fittings, equipment and similar items shall include for: all fixings to various building surfaces					
	(c) Rates shall include for all necessary electrical wiring and accessories required for completion					
15.2.00	**FIRE EXTINGUISHERS (Confirming to BS EN 3-10)**					
15.2.01	Supply and installation of 2Kg CO2 Extinguishers	nr	5.00			
15.2.02	Supply and installation of 9 Lt. water Extinguishers.	nr	5.00			

ITEM	DESCRIPTION	UNIT	QTY	MATERIAL RATE	LABOUR RATE	AMOUNT
15.3.00	**TOTAL OF BILL №: 15 - Carried Over To Summary**					

ITEM		DESCRIPTION	UNIT	QTY	MATERIAL RATE	LABOUR RATE	AMOUNT
16.0.00		**Bill №: 16- ADDITIONS AND OMMISIONS**					
16.1.00	**ADDITIONS**						
16.1.01		Bill №: 01 - PRELIMINARIES					
16.1.02		Bill №: 02 - EXCAVATION AND FILLING					
16.1.03		Bill №: 03 - INSITU CONCRETE WORKS					
16.1.04		Bill №: 04 - MASONRY					
16.1.05		Bill №: 05 - STRUCTURAL METAL WORKS					
16.1.06		Bill №: 06 - ROOFING					
16.1.07		Bill №: 07 - WINDOWS, SCREENS & LIGHTS					
16.1.08		Bill №: 08 - DOORS, SHUTTERS & HATCHES					
16.1.09		Bill №: 09 - FLOOR, WALL, CEILING, AND ROOF FINISHINGS					
16.1.10		Bill №: 10 - SUSPENDED CEILING					
16.1.11		Bill №: 11 - PAINTING & DECORATIONS					
16.1.12		Bill №: 12 - STAIRS, WALKWAYS AND BALUSTRADES					
16.1.13		Bill №: 13 - MECHANICAL & ELECTRICAL SERVICES					
16.1.14		Bill №: 14 - PLUMBING					
16.1.15		Bill №: 15 - INSULATION, FIRE STOPPING & FIRE PROTECTION					
		TOTAL					
16.2.00	**OMISSIONS**						
16.2.01		Bill №: 01 - PRELIMINARIES					
16.2.02		Bill №: 02 - EXCAVATION AND FILLING					
16.2.03		Bill №: 03 - INSITU CONCRETE WORKS					
16.2.04		Bill №: 04 - MASONRY					
16.2.05		Bill №: 05 - STRUCTURAL METAL WORKS					
16.2.06		Bill №: 06 - ROOFING					
16.2.07		Bill №: 07 - WINDOWS, SCREENS & LIGHTS					
16.2.08		Bill №: 08 - DOORS, SHUTTERS & HATCHES					
16.2.09		Bill №: 09 - FLOOR, WALL, CEILING, AND ROOF FINISHINGS					
16.2.10		Bill №: 10 - SUSPENDED CEILING					
16.2.11		Bill №: 11 - PAINTING & DECORATIONS					
16.2.12		Bill №: 12 - STAIRS, WALKWAYS AND BALUSTRADES					
16.2.13		Bill №: 13 - MECHANICAL & ELECTRICAL SERVICES					
16.2.14		Bill №: 14 - PLUMBING					
16.2.15		Bill №: 15 - INSULATION, FIRE STOPPING & FIRE PROTECTION					
		TOTAL					
16.3.00		**TOTAL OF BILL №: 16 - Carried Over To Summary**					