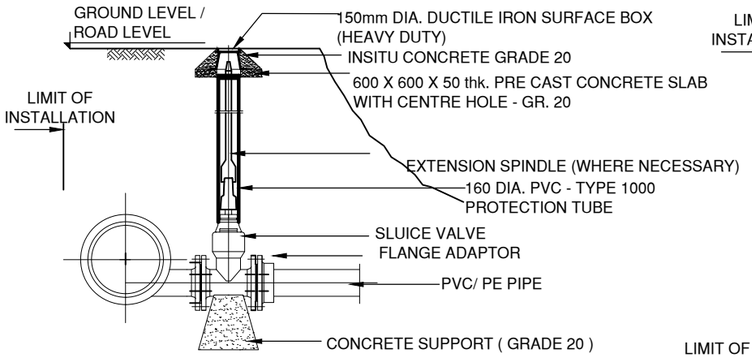

SECTION A - A

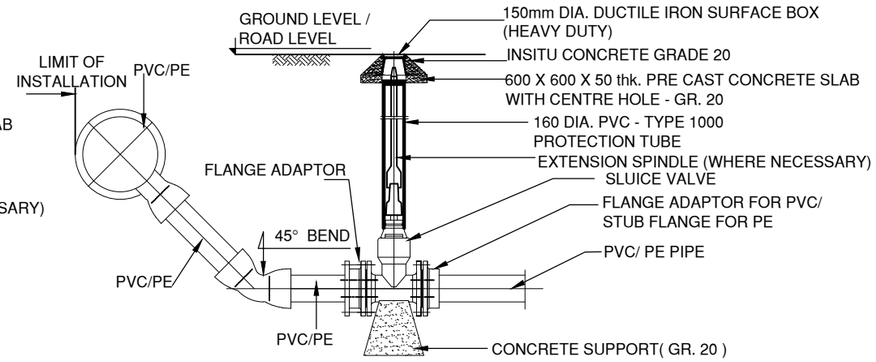

SECTION C - C

DETAILS OF CONNECTION FROM MAIN PIPE LINE UP TO CHAMBER

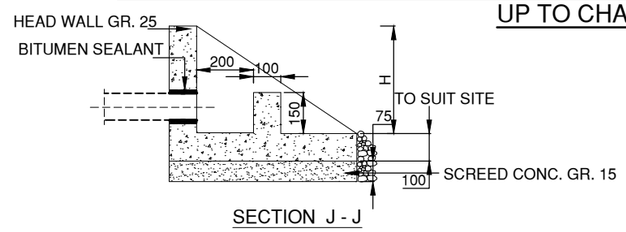

SECTION J - J

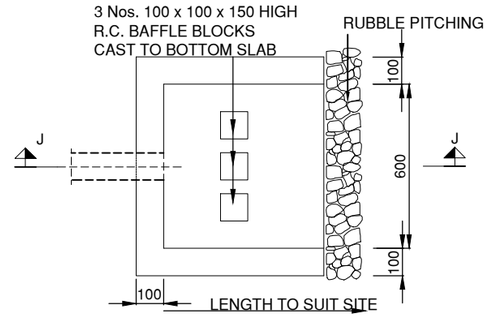

PLAN

OUTLET CHAMBER - TYPE C

DISCHARGE LEVEL BELOW PIPE LINE AND
STRUCTURE NOT SUBJECTED TO TRAFFIC LOADS

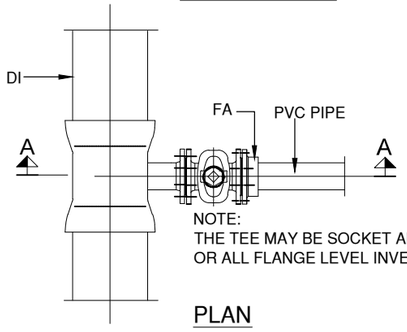

NOTE:
THE TEE MAY BE SOCKET AND FLANGE BRANCH LEVEL INVERTED TEE
OR ALL FLANGE LEVEL INVERTED TEE AS NECESSARY

PLAN

FOR DI PIPES (250 AND ABOVE)/ PE PIPES (280 AND ABOVE)

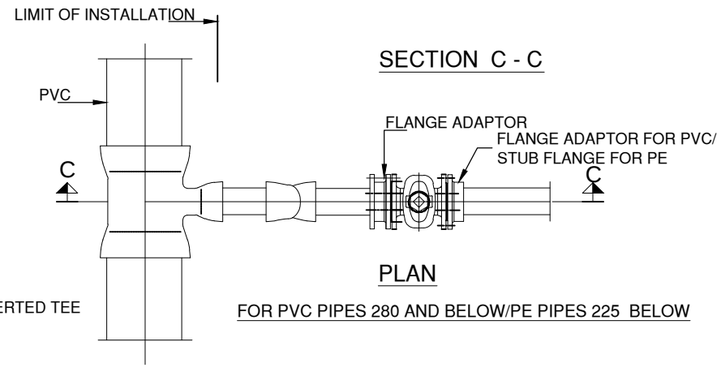

PLAN

FOR PVC PIPES 280 AND BELOW/PE PIPES 225 BELOW

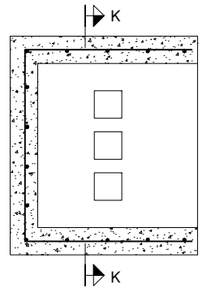

PLAN

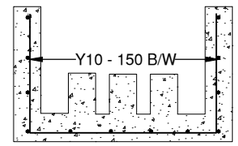

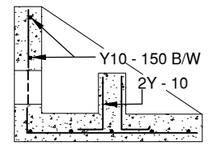

SECTION K - K

REINFORCEMENT DETAILS FOR
PRECAST CONCRETE STRUCTURE OF WASHOUT TYPE - A AND TYPE - C CHAMBER

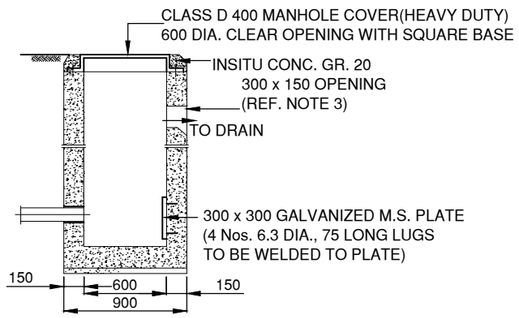

SECTION E - E

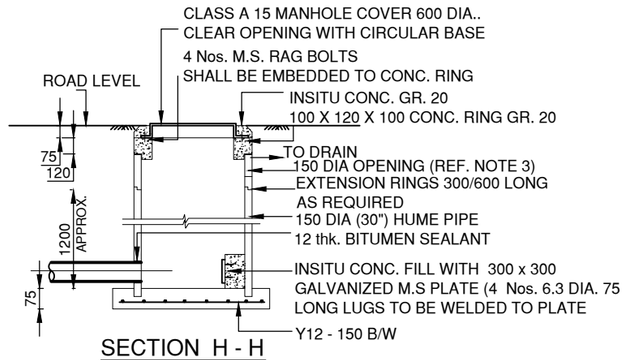

SECTION H - H

SIZE OF MAIN PIPE LINE	SIZE OF WASHOUT VALVE	SIZE OF LEAD AWAY PIPE FROM MAIN PIPE TO CHAMBER
UP TO 280 PVC/ PE	80	90 PVC/ PE
250 - 300 DI	80	90 PVC/ PE
350 - 400 DI	100	110 PVC/ PE
600 DI	100	110 PVC/ PE

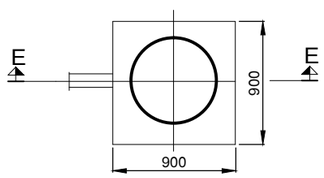

PLAN

OUTLET CHAMBER - TYPE A

DISCHARGE LEVEL ABOVE PIPE LINE AND
CHAMBER SUBJECTED TO TRAFFIC LOADS

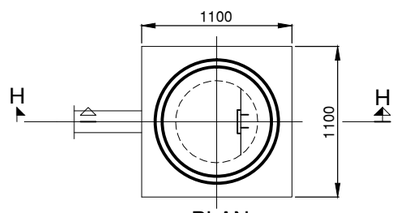

PLAN

OUTLET CHAMBER - TYPE B

DISCHARGE LEVEL ABOVE PIPE LINE AND
CHAMBER NOT SUBJECTED TO TRAFFIC LOADS

NOTES

1. ALL DIMENSIONS ARE IN MILLIMETRES.
2. LENGTH OF PIPE FROM THE VALVE TO THE DISCHARGE POINT SHALL BE TO SUIT THE SITE
3. FOR TYPE A & TYPE B IF THE LOCATION OF CHAMBER DOES NOT PERMIT DIRECT DISCHARGE TO A NATURAL DRAINAGE OUTLET, THEN A LEAD PIPE FROM THE CHAMBER SHALL BE USED UPTO A SUITABLE LOCATION.
4. PRE-CAST CONCRETE TO BE GRADE 35 A.

CLIENT:
MINISTRY OF ENVIRONMENT
AND ENERGY

CONSULTANCY SERVICES FOR DESIGN OF WATER SUPPLY FACILITIES IN Ha.HORAFUSHI, Hdh.HANIMAADHOO,Sh.MILANDHOO,R.UNGOOFAARU,Lh.NAIFARU,Dh,KUDAHUVADHOO ,Th.GURAIDHOO AND Ga.VILLINGILI , MALDIVES

DESIGN	DRAWN	CHECKED	APPROVED
ENGINEER		DESIGN CHIEF	
DATE			

SL.NO	DRWING NO	DESCRIPTION

GREENTECH CONSULTANTS (Pvt.) Ltd IN ASSOCIATION WITH
DEVELOPMENT COLLABORATION PARTNERSHIP (Pvt.) Ltd MALDIVES
AND OPTIMUM SOLOUTIONS (Pvt) Ltd, MALDIVES

TITLE:
WASHOUT VALVE CHAMBERS
HOARAFUSHI

DRG.NO: HOARAFUSHI/STD/06
SCALE: NOT TO SCALE