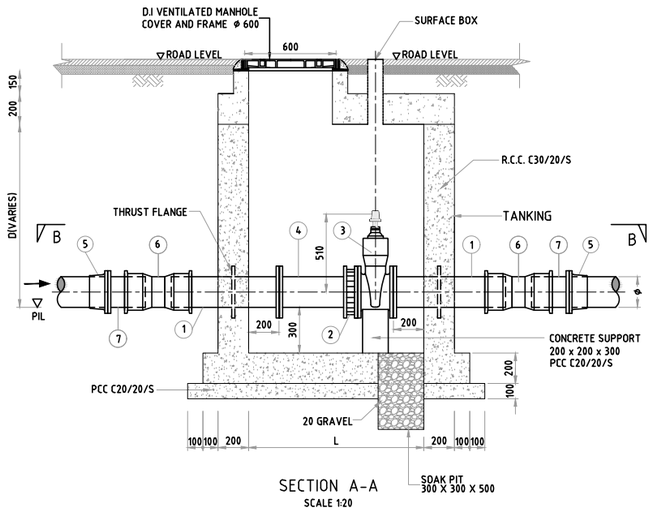

SECTION A-A
SCALE 1:20

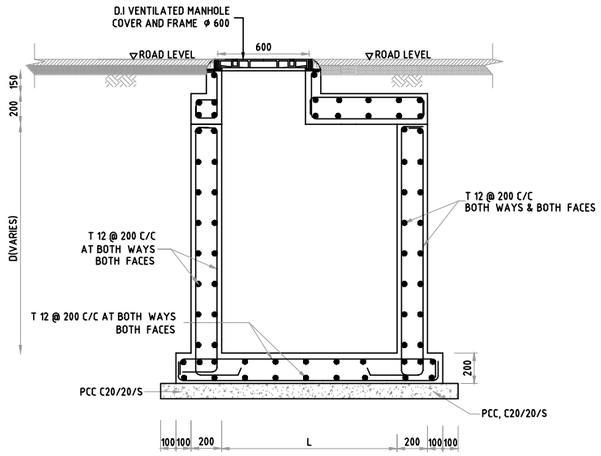

REINFORCEMENT DETAILS AT SECTION A-A
SCALE 1:20

DIMENSIONS OF VALVE CHAMBER

DIA OF PIPE (D)	L	B	a
200	1150	1100	500
250	1600	1200	250

SCHEDULE OF SPECIALS AND FITTINGS

ITEM	SPECIALS AND FITTINGS	Q.TY
1	DI FLANGED SPIGOT PIPE WITH WELDED THRUST FLANGE	2
2	FLANGE ADAPTOR	1
3	DI GATE VALVE	1
4	DI FLANGED-SPIGOT PIECE	1
5	DI/PE ADOPTOR	2
6	DI COLLAR	2
7	DI SHORT LENGTH FLANGED SPIGOT PIECE	2

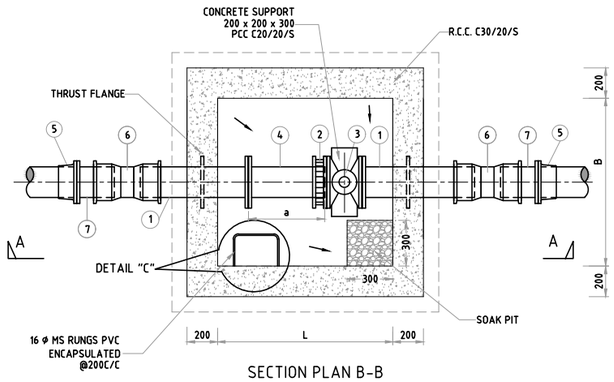

SECTION PLAN B-B
SCALE 1:20

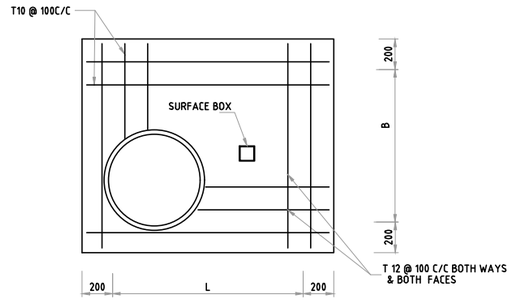

REINFORCEMENT DETAILS OF COVER SLAB
SCALE 1:20

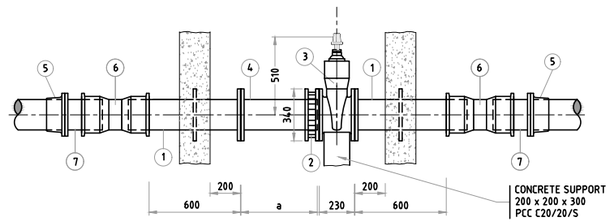

ELEVATION

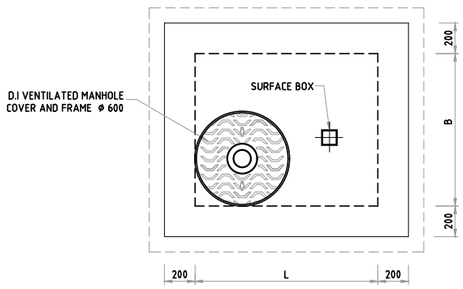

ROOF PLAN
SCALE 1:20

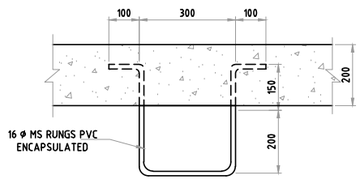

DETAIL - C
T16 MS RUNGS PVC ENCAPSULATED
SCALE 1:10

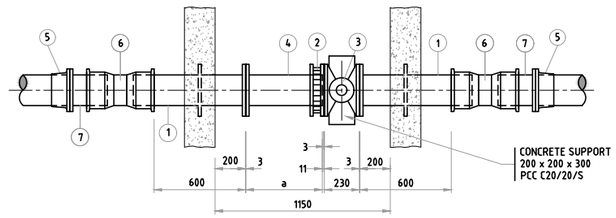

PLAN
GENERAL ARRANGEMENT OF VALVE & FITTINGS FOR Ø200 PIPE
SCALE 1:20

TENDER PURPOSE

1. All dimensions are in mm
2. For location and depths of Gate Valve chamber refer to drawings of pipeline plans and profiles.
3. The specials and pipe fittings shall be selected to suit the supply pipe line
4. All the valves , specials and pipes inside the chamber shall be of Ductile iron
5. Gate Valve shall comply with BS 5150
6. DI pipe & Fitting shall comply with BS 4772
7. Building materils:-
   Description of building materials is as follows

C 30 / 20 / S
Compressive strength of concrete | Sulphate resistant cement
Maximum size of aggregate

8. Concrete:
   a. mixes shall comply with BS 8110
   b. minimum 28 day characteristic strength in accordance with BS 8110
9. Cover to reinforcement to be 50mm,
10. The steel used shall be of fy 350 grade.
11. The tanking shall be with two layers of Bituminous Paint for external surfaces of Valve chamber
12. Gate Valve Chamber to be provided for Pipe dia 200 to 300 mm
13. MH Cover Should Comply to BS EN 124 Class D400

ABBREVATIONS

PIL - PIPE INVERT LELEL.
MS - MILD STEEL.
DI - DUCTILE IRON.
PE - POLY ETHYLINE
RCC -REINFORCED CEMENT CONCRETE
PCC - PLAIN CEMENT CONCRETE

No.	DESCRIPTION	BY	DATE	APPR.

REVISION

CONSULTANT
SHAH TECHNICAL CONSULTANTS PVT. LTD., INDIA
IN ASSOCIATION WITH
DEVELOPMENT TECHNOLOGIES MALDIVES, MALDIVES

CLIENT
MINISTRY OF ENVIRONMENT AND ENERGY
MALE' REPUBLIC OF MALDIVES

PROJECT
PROVISION OF RAINWATER HARVESTING SYSTEM IN 10 ISLANDS

ASSIGNMENT
CONSULTANCY SERVICES FOR DESIGN AND SUPERVISION OF RAINWATER HARVESTING SYSTEM IN SH. NOOMARA, SH. BILEHFAHI, SH. FEYDHOO, SH. FEEVAH, SH. NARUDHOO, SH. LHAIMAGU, SH. FUNADHOO, N. HENBADHOO, N. LHOHI, N. MAGOODHOO, MALDIVES [PACKAGE - 2]

DRAWING TITLE
STANDARD DRAWING OF SLUICE VALVE CHAMBER

APPROVED	CHECKED	DESIGNED	DRAWN
SSS	SSS	SPP	PDP

SCALE	DATE	DRAWING NUMBER	REVISION
AS SHOWN	FEB 2018	WS/STD/03	0

A1-LANDSCAPE