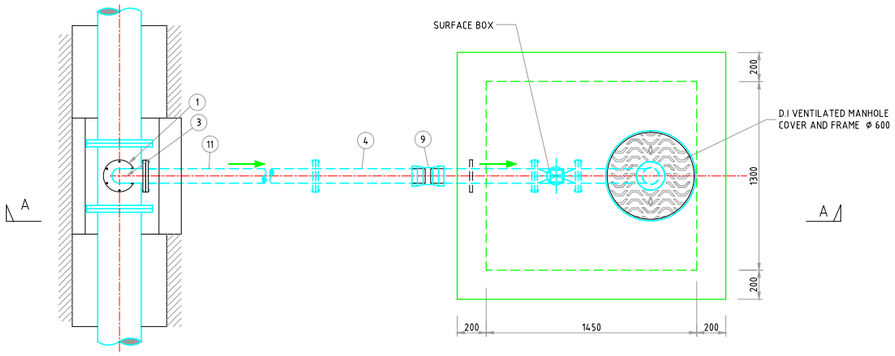

ROOF PLAN
SCALE 1:20

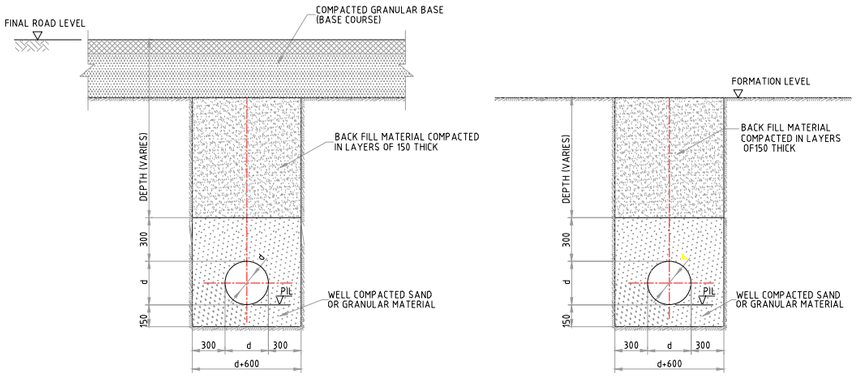

PAVED SURFACE

UN PAVED SURFACE

TYPICAL PIPE TRENCH SECTION

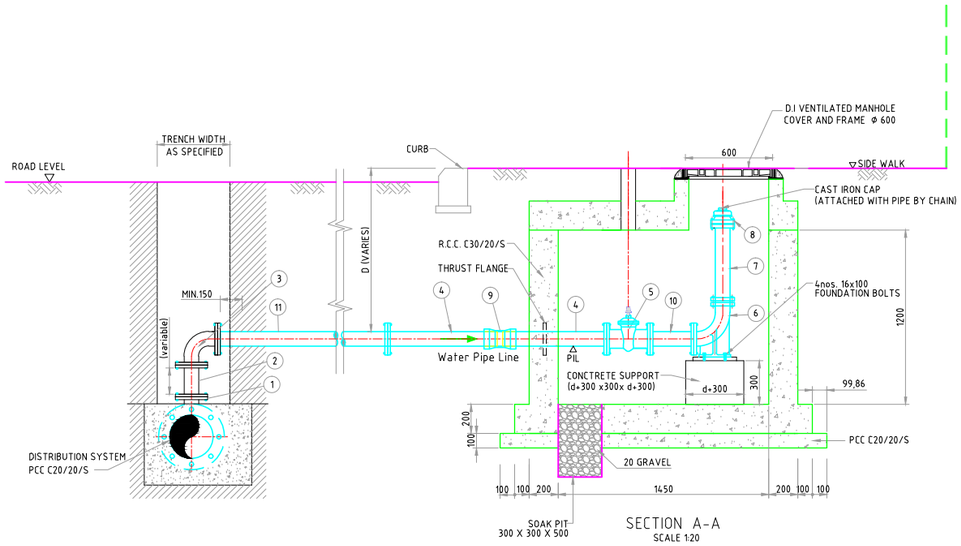

SECTION A-A
SCALE 1:20

FITTINGS			
ITEM	DESCRIPTION	QTY	DIAMETER
1	DI ALL FLANGED TEE	1	Var./80
2	DI DOUBLE FLANGED PIPE (VARIABLE)	1	DN80
3	DI DF 90° SHORT BEND	1	DN80
4	FLANGED SPIGOT PIPE	3	DN80
5	DI GATE VALVE	1	DN80
6	DI DUCK FOOT BEND	1	DN80
7	DI DF PIPE 900 LONG	1	DN80
8	FIRE HYDRANT	1	DN80
9	DI COLLAR	2	DN80
10	DI FLANGED SPIGOT PIPE WITH WELDED THRUST FLANGE	1	DN80
11	DI DF PIPE (AS PER REQUIREMENT)	1	DN80

NOTES:

1. All dimensions are in mm
2. For location of fire hydrant and depths of valve chamber refer to drawings of pipeline plans and profiles.
3. Building materils:-
   Description of building materials is as follows
   C 30 / 20 / S
   Compressive strength of concrete | sulphate resistant cement
   maximum size of aggregate
4. All the valves , specials and pipes inside the chamber shell be of Ductile iron
5. The tanking shall be with two layers of Bituminous Paint for external surfaces of Valve chamber
6. The specials and pipe fittings shall be supplied by the vendor to suit the supply pipe line
7. Minimum cover to reinforcement shell be 50mm
8. Concrete: a. mixes shall comply with bs 8110
   b. minimum 28 day characteristic strength
9. Shall be measured on a cube specimen in accordance with BS 8110
10. DI Pipe and fitting shall comply with BS 4772
11. Gate Valve shall comply with BS 5150

ABBREVATIONS

PIL - PIPE INVERT LELEL.
MS - MILD STEEL.
DI - DUCTILE IRON.
PE - POLY ETHYLINE
RCC - REINFORCED CEMENT CONCRETE
PCC - PLAIN CEMENT CONCRETE

No.	DATE	DESCRIPTION	DRG. No.	DESCRIPTION
		REVISION	REFERENCE DRAWINGS	

CLIENT
MINISTRY OF ENVIRONMENT AND ENERGY
MALE' REPUBLIC OF MALDIVES

PROJECT
CONSULTANCY SERVICES FOR SURVEY, DESIGN OF WATER SUPPLY FACILITIES IN THE ISLAND R. MADUVVAREE, MALDIVES

TITLE
TYPICAL DRAWING OF FIRE HYDRANTS

SHAH TECHNICAL CONSULTANTS PVT. LTD., INDIA
In Association With
DEVELOPMENT TECHNOLOGIES MALDIVES, MALDIVES

APPROVED	CHECKED	DESINED	DRAWN
SSS	SSS	RKC	VPT

SCALE	DATE	DRAWING No.	REVISION
AS SHOWN	APRIL 2017	R. MADUVVAREE/WS/11	0

A1 – LANDSCAPE