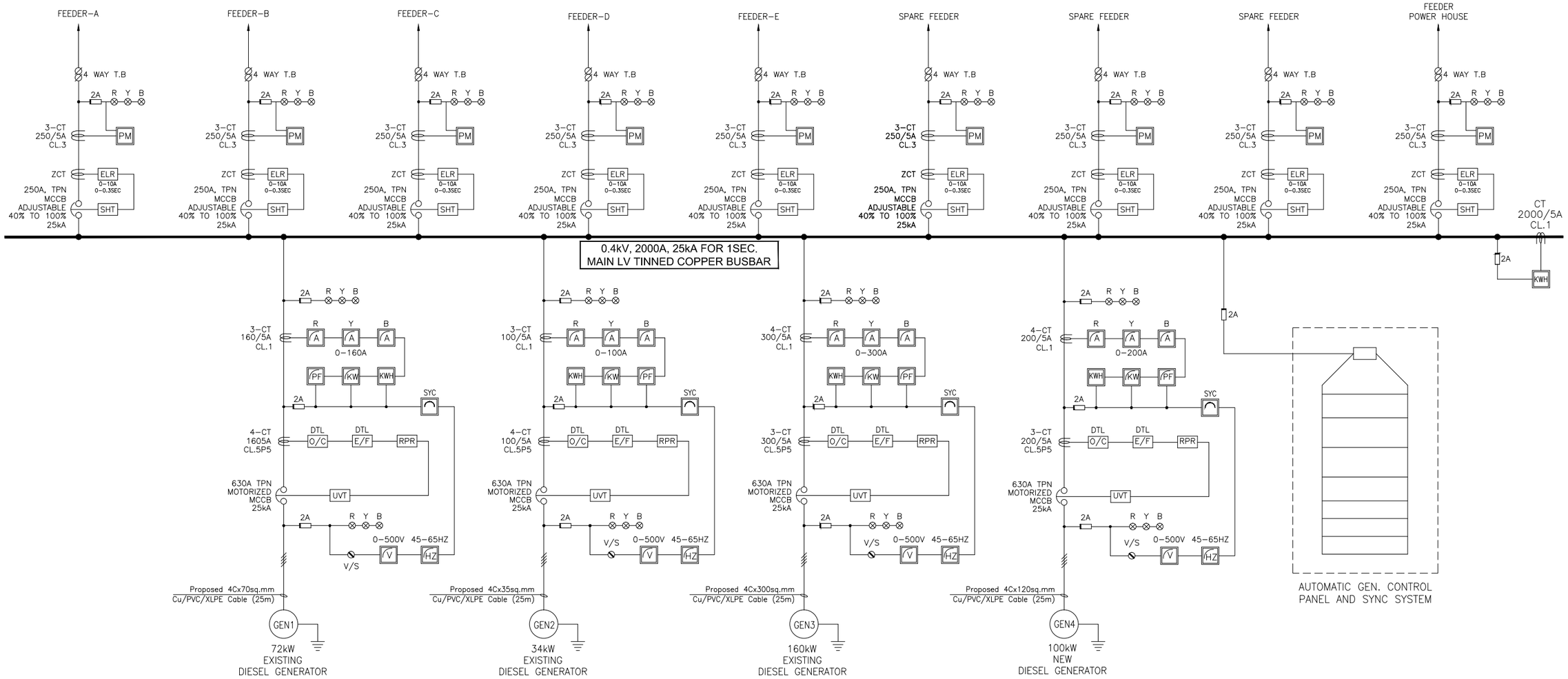

NOTES:-

1. THESE DRAWINGS ARE PRELIMINARY AND ARE FOR TENDERING PURPOSES ONLY.
2. CONTRACTOR SHALL CARRY OUT DETAILED SITE SURVEY AND ENGINEERING / STUDY TO EVALUATE AND PROPOSE THE EXTENT OF REPLACEMENT / MODIFICATION REQUIRED IN THE EXISTING DISTRIBUTION NETWORK. THIS IS SUBJECT TO REVIEW AND APPROVAL BY THE EMPLOYER DURING THE ENGINEERING PHASE OF THE PROJECT.

PURPOSE OF SUBMISSION	REV	AUTHORISED BY	DATE
INITIAL DOCUMENTS	A	GKH	28/03/16
FIRST REVISION	B	GKH	25/05/16
SECOND REVISION	C	GKH	19/06/16

DRAWING TITLE
CONCEPTUAL SCHEMATIC DIAGRAM FOR LV DISTRIBUTION BOARD OF POWER HOUSE (B05-NAIVADHOO)

PROJECT
PREPARING OUTER ISLANDS SUSTAINABLE DEVELOPMENT

CLIENT:
GOVERNMENT OF THE REPUBLIC OF MALDIVES

DESIGN : ESM
DRAWN : DAI
LICENCE NO:
DATE: : 19JUN16

SCALE : N.T.S
DRW NO. : J431-GOPA-014-GR-E-S-0001-RevC
ISLAND NAME : NAIVADHOO
PAGE : 1/1