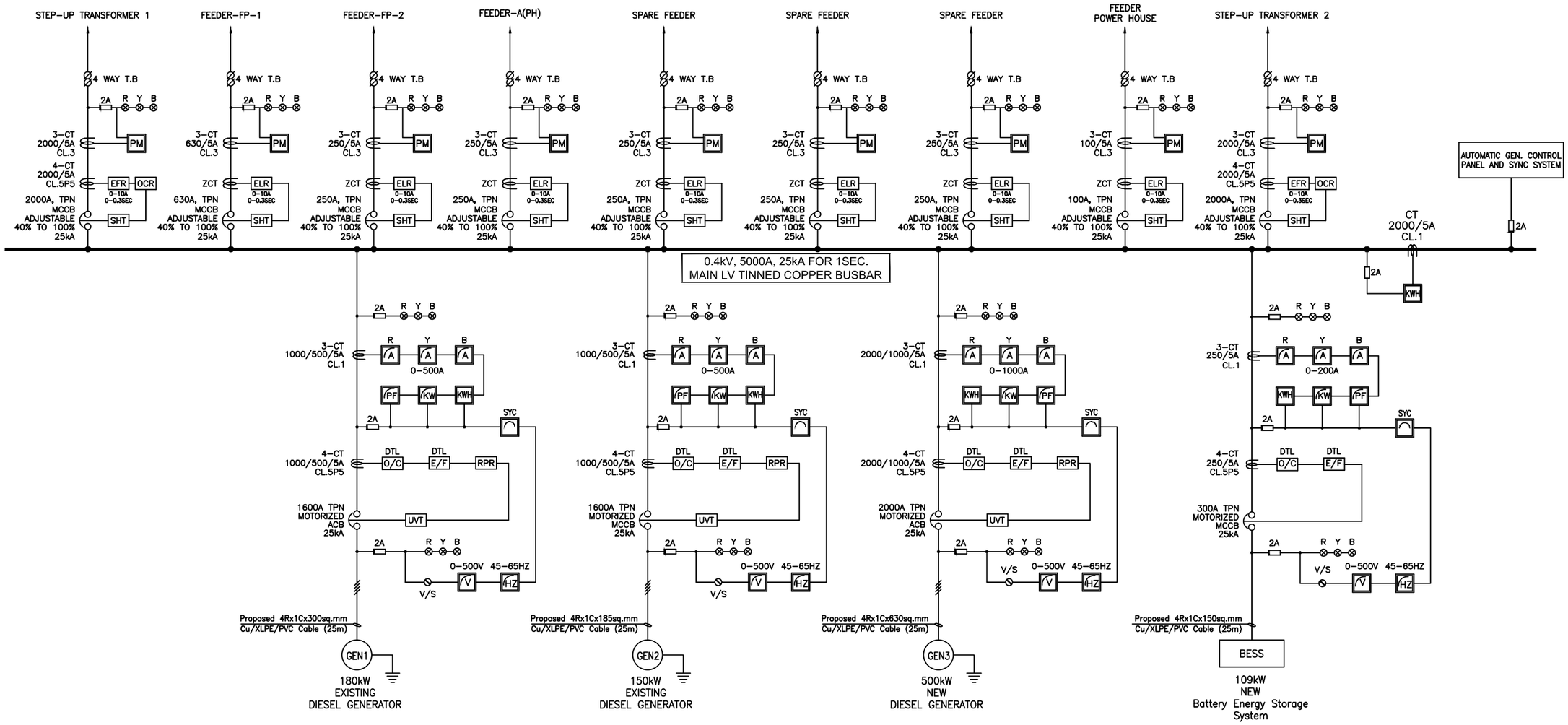

NOTES:-

1. THESE DRAWINGS ARE PRELIMINARY AND ARE FOR TENDERING PURPOSES ONLY.
2. CONTRACTOR SHALL CARRY OUT DETAILED SITE SURVEY AND ENGINEERING / STUDY TO EVALUATE AND PROPOSE THE EXTENT OF REPLACEMENT / MODIFICATION REQUIRED IN THE EXISTING DISTRIBUTION NETWORK. THIS IS SUBJECT TO REVIEW AND APPROVAL BY THE EMPLOYER DURING THE ENGINEERING PHASE OF THE PROJECT.

PURPOSE OF SUBMISSION	REV	AUTHORISED BY	DATE	DRAWING TITLE		DESIGN : ESM	SCALE : N.T.S
FIRST REVISION	A	SWK	18/07/16	CONCEPTUAL SCHEMATIC DIAGRAM FOR LV DISTRIBUTION BOARD OF POWER HOUSE (D03-KENDHIKULHUDHOO-PH)		DRAWN : DAI	DRW NO. : J431-GOPA-083-GR-E-S-0001-Rev.C
SECOND REVISION	B	SWK	08/08/16	PROJECT PREPARING OUTER ISLANDS SUSTAINABLE DEVELOPMENT	CLIENT: GOVERNMENT OF THE REPUBLIC OF MALDIVES	LICENCE NO:	ISLAND NAME : KENDHIKULHUDHOO
	C	A.M	20/12/16			DATE: : 08AUG16	PAGE : 1/1