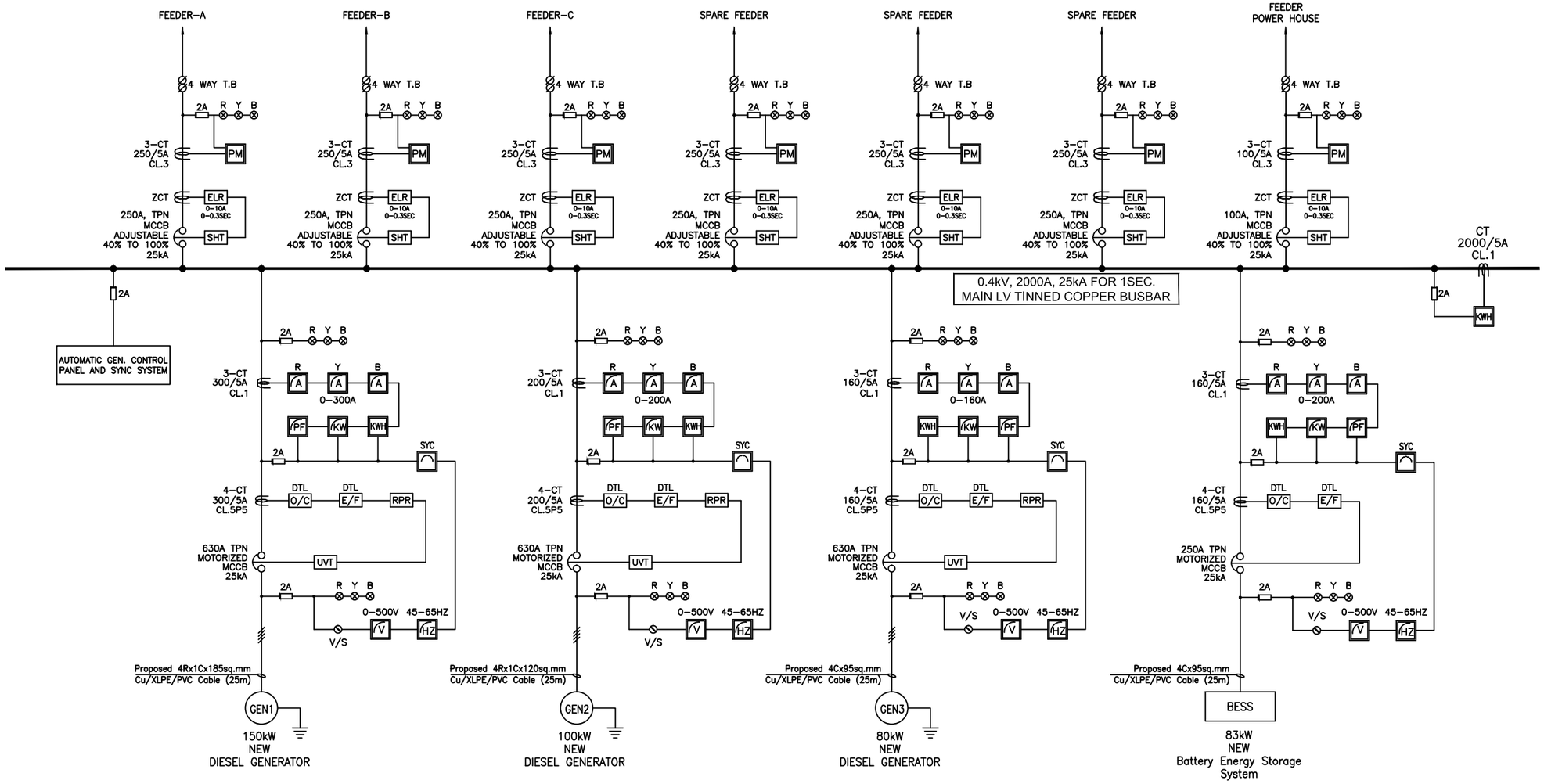


NOTES:-

1. THESE DRAWINGS ARE PRELIMINARY AND ARE FOR TENDERING PURPOSES ONLY.
2. CONTRACTOR SHALL CARRY OUT DETAILED SITE SURVEY AND ENGINEERING / STUDY TO EVALUATE AND PROPOSE THE EXTENT OF REPLACEMENT / MODIFICATION REQUIRED IN THE EXISTING DISTRIBUTION NETWORK. THIS IS SUBJECT TO REVIEW AND APPROVAL BY THE EMPLOYER DURING THE ENGINEERING PHASE OF THE PROJECT.

| PURPOSE OF SUBMISSION | REV | AUTHORISED BY | DATE |
|---|---|---|---|
| FIRST REVISION | A | SWK | 18/07/16 |
| SECOND REVISION | B | SWK | 08/08/16 |
| | C | A.M | 20/12/16 |

DRAWING TITLE
CONCEPTUAL SCHEMATIC DIAGRAM FOR LV DISTRIBUTION BOARD OF POWER HOUSE (D02-HENBADHOO)

PROJECT
PREPARING OUTER ISLANDS SUSTAINABLE DEVELOPMENT

CLIENT:
GOVERNMENT OF THE REPUBLIC OF MALDIVES

DESIGN : ESM
DRAWN : DAI
LICENCE NO:
DATE: : 008AUG16

SCALE : N.T.S
DRW NO. : J431-GOPA-050-GR-E-S-0001-Rev.C
ISLAND NAME : HENBADHOO
PAGE : 1/1