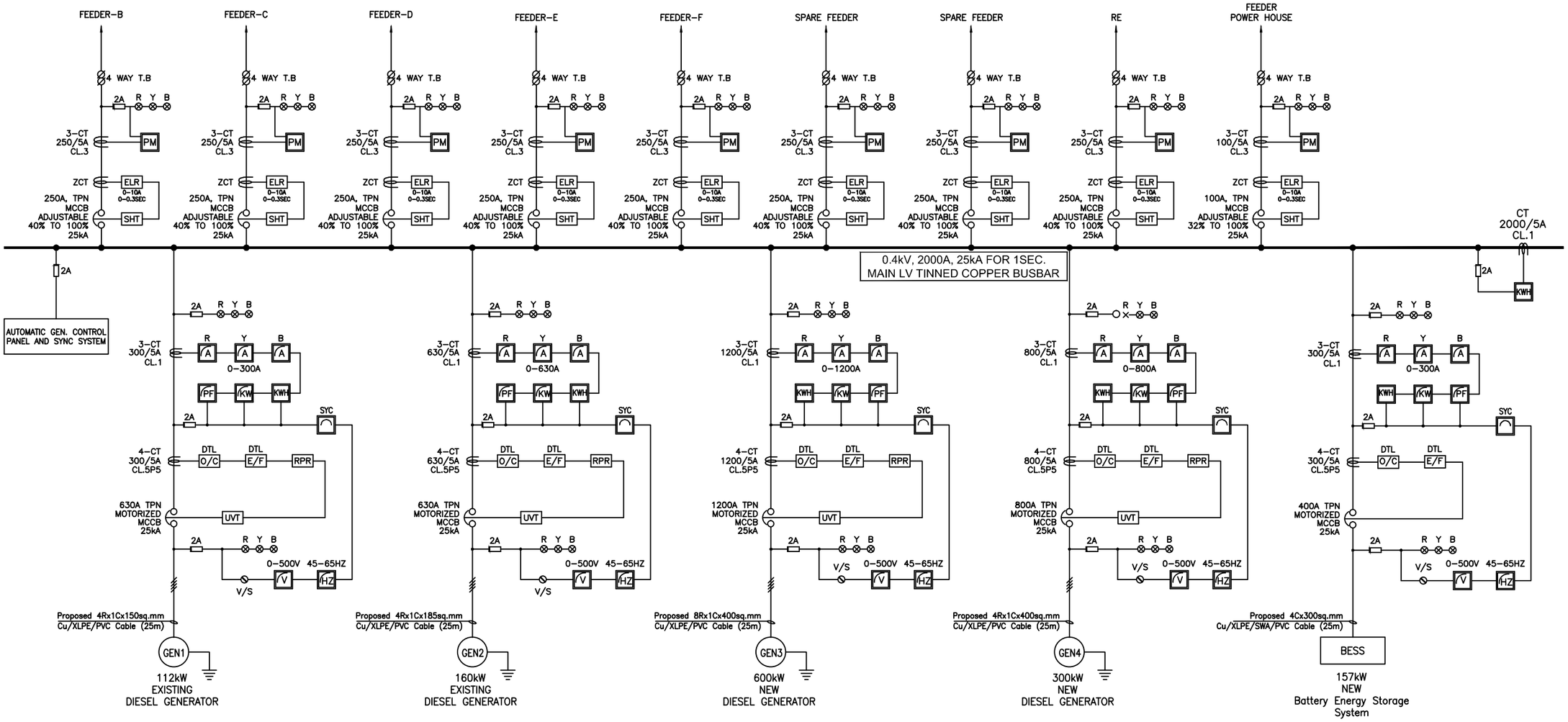

NOTES:-

1. THESE DRAWINGS ARE PRELIMINARY AND ARE FOR TENDERING PURPOSES ONLY.
2. CONTRACTOR SHALL CARRY OUT DETAILED SITE SURVEY AND ENGINEERING / STUDY TO EVALUATE AND PROPOSE THE EXTENT OF REPLACEMENT / MODIFICATION REQUIRED IN THE EXISTING DISTRIBUTION NETWORK. THIS IS SUBJECT TO REVIEW AND APPROVAL BY THE EMPLOYER DURING THE ENGINEERING PHASE OF THE PROJECT.

PURPOSE OF SUBMISSION	REV	AUTHORISED BY	DATE
FIRST REVISION	A	SWK	18/07/16
SECOND REVISION	B	SWK	08/08/16
	C	A.M	20/12/16

DRAWING TITLE: CONCEPTUAL SCHEMATIC DIAGRAM FOR LV DISTRIBUTION BOARD OF POWER HOUSE (D15-VELIDHOO)

PROJECT: PREPARING OUTER ISLANDS SUSTAINABLE DEVELOPMENT

CLIENT: GOVERNMENT OF THE REPUBLIC OF MALDIVES

DESIGN : ESM

DRAWN : DAI

LICENCE NO:

DATE: : 08AUG16

SCALE : N.T.S

DRW NO. : J431-GOPA-092-GR-E-S-0001-Rev.C

ISLAND NAME : VELIDHOO

PAGE : 1/1