INSPECTION CHAMBER DETAILS FROM TOILET

SCALE : 1 : 10

PLAN

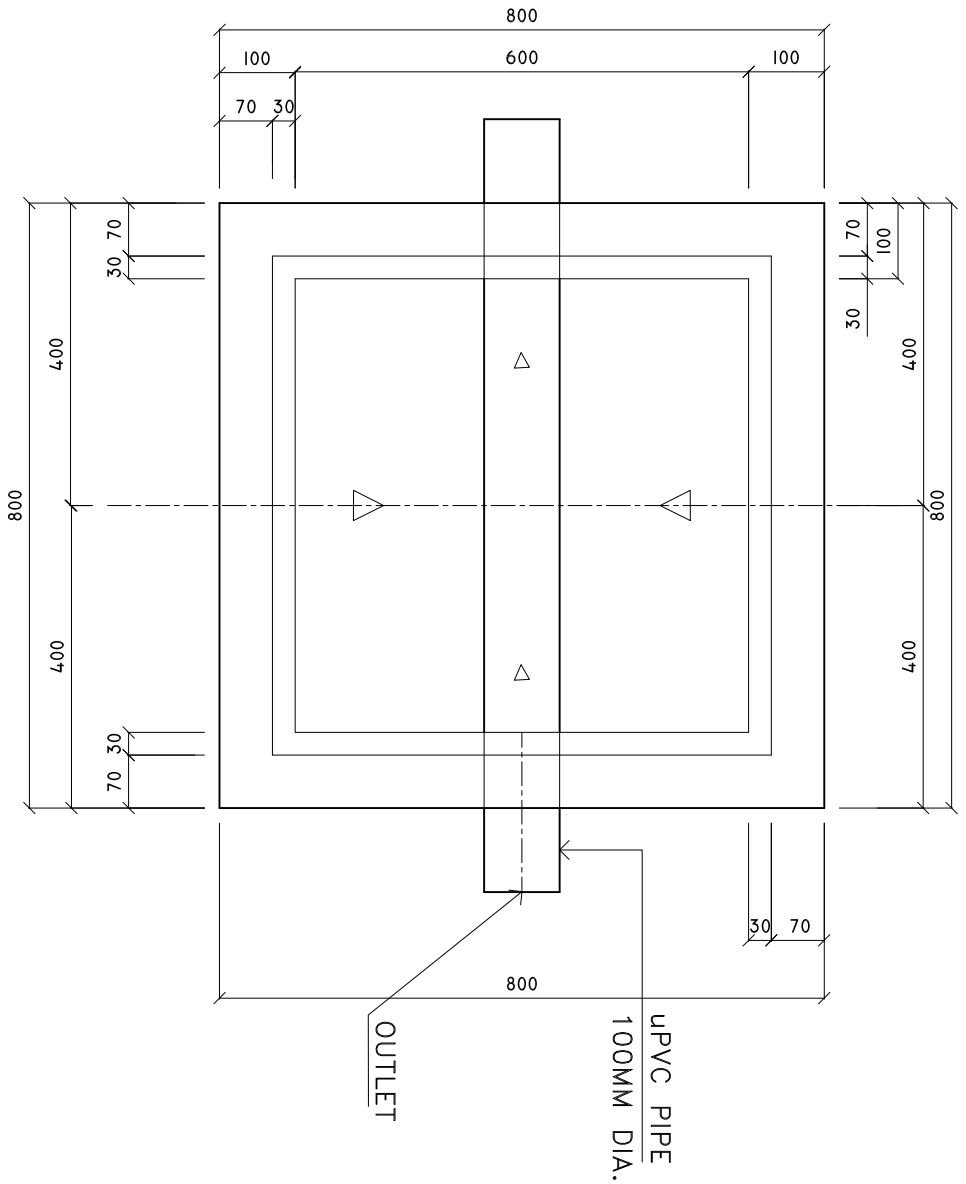

SECTION X-X

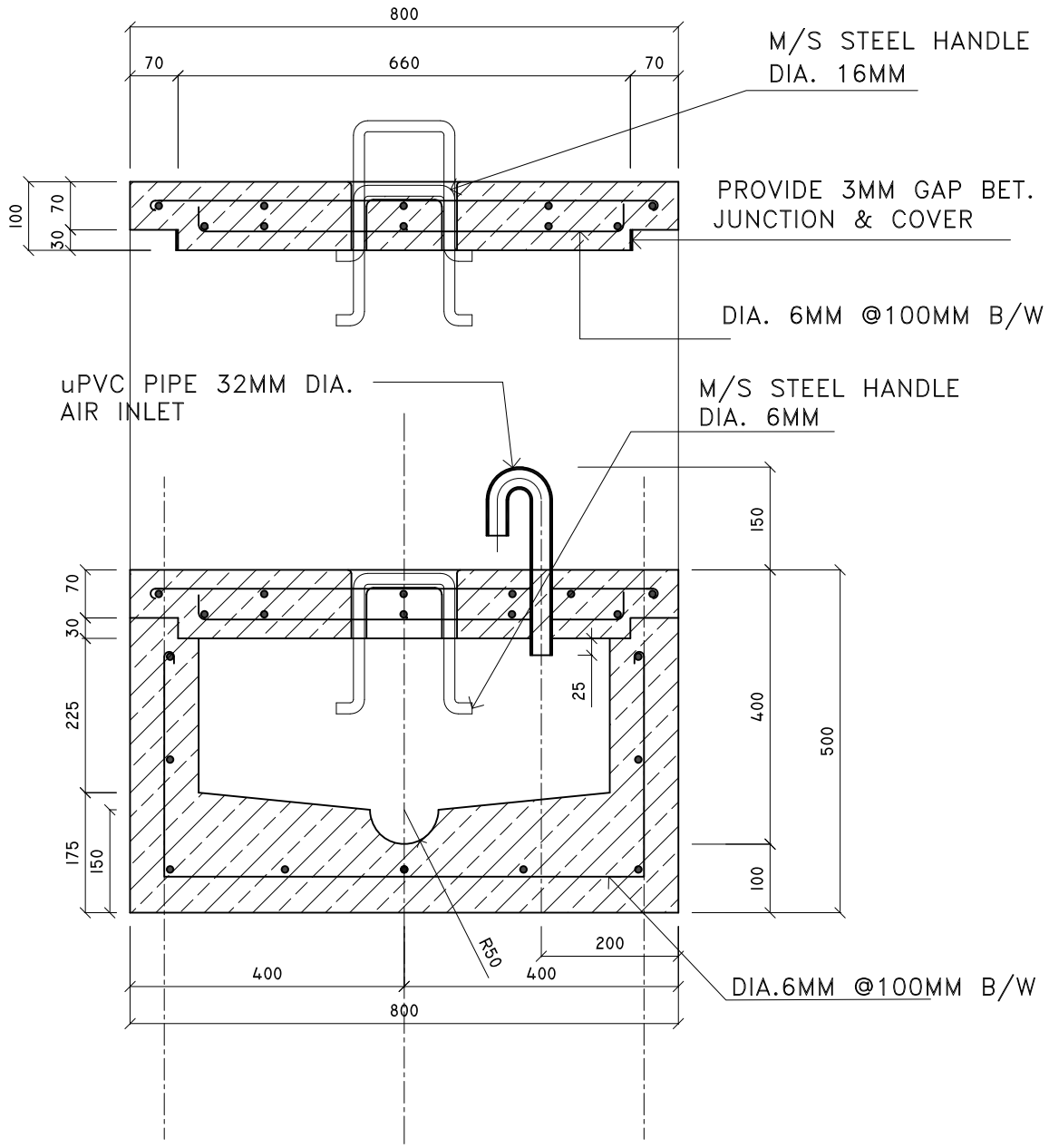

SHEET CONTENTS :

REVISION NOTES:

PROJECT:
CONSTRUCTION OF GDH. FARES-MAATHODA HEALTH CENTER FINISHING WORKS

CLIENT:
MINISTRY OF HEALTH

LOCATION:
GDH. FARES-MAATHODA

CONTENTS: *AS GIVEN*

PROJECT MANAGER:
DESIGNER: *ARIZ*
CIV/STR. ENGINEER:
SURVEYED BY: -
DRAWN BY: *ARIZ*
CHECKED BY:
DATE: *MARCH 2017*
SHEET NO. : /

ADMIN DIVISON
Ministry of Health
Roshanee Building
Sosun Magu'
Tel: 332 8887, Fax: 3328889