MINISTRY OF ENVIRONMENT AND ENERGY

REPUBLIC OF MALDIVES

TENDER DRAWINGS

01 MARCH 2016

PROJECT :

PROVISION OF WATER SUPPLY FACILITIES IN B. EYDHAFUSHI, MALDIVES

CONSULTANT:

Al-Habshi Consultant

Al-Habshi Consultants Office

Tel.: 2430103 / 2433131 - Fax : 2431136
P.O.Box 27154 Safat 13132 - Kuwait

LIST OF DRAWINGS

DWG. NOS	DRAWING TITLES
GENERAL	
BE-WS-100	LIST OF DRAWINGS
WATER SUPPLY	
BE-WS-101 (1 OF 2)	WATER SUPPLY LAYOUT-PART-A
BE-WS-101 (2 OF 2)	WATER SUPPLY LAYOUT-PART-B
BE-WS-102	RAIN WATER COLLECTION LAYOUT
BE-WS-103 (1 OF 2)	BRINE OUTFALL LAYOUT & SECTION
BE-WS-103 (2 OF 2)	BRINE OUTFALL DETAILS
BE-WS-104	INTEGRATED WATER SUPPLY NETWORK SCHEMATIC
BE-WS-105	RO PLANT LAYOUT
BE-WS-106	BRINE PUMP DETAILS
BE-WS-107	TUBE WELL DETAIL
BE-WS-109 (1 OF 4)	TYPICAL DETAILS-WATER SUPPLY - (SHEET-01)
BE-WS-109 (2 OF 4)	TYPICAL DETAILS-WATER SUPPLY - (SHEET-02)
BE-WS-109 (3 OF 4)	TYPICAL DETAILS-WATER SUPPLY - (SHEET-03)
BE-WS-109 (4 OF 4)	TYPICAL DETAILS-WATER SUPPLY - (SHEET-04)
BE-WS-110	TYPICAL PIPE BENDING DETAILS
BE-WS-111	GRP WATER TANK
BE-WS-113	RO PLANT ADMIN BUILDING - FLOOR AND ROOF PLAN
BE-WS-114	RO PLANT ADMIN BUILDING - ELEVATIONS AND SECTION
BE-WS-115	RO PLANT ADMIN BUILDING - DOOR,WINDOW & EXHAUST FAN DETAILS
BE-WS-116	RO PLANT ADMIN BUILDING - SEWERAGE AND WATER SUPPLY LAYOUT
BE-WS-117	RO PLANT ADMIN BUILDING - STRUCTURAL DRAWINGS
BE-WS-119	REVERSE OSMOSIS UNIT STRUCTURAL PLANS
BE-WS-120	REVERSE OSMOSIS UNIT STRUCTURAL DETAIL & SCHEDULES
BE-WS-121	REVERSE OSMOSIS UNIT DETAILS

LIST OF DRAWINGS

DWG. NOS	DRAWING TITLES
ELECTRICAL	
BE-EL-100	RO PLANT ADMIN BUILDING ELECTRICAL LAYOUT
BE-EL-101	RO PLANT BUILDING ELECTRICAL LAYOUT
BE-EL-102	RO PLANT ELECTRICAL LAYOUT
BE-EL-103	SCHEMATIC DIAGRAM FOR RO PLANT
BE-EL-104	ELECTRICAL DB SCHEDULE
BE-EL-105	ELECTRICAL TYPICAL DETAILS

REFERENCE DRAWINGS

SL.No.	DRAWING No.	DESCRIPTION

REV.	DATE	DESCRIPTION	DRAWN	CHKD.	APPRD.
..	..	..	..	..	..
..	..	..	.	..	..
..	..	..	..	..	..
0	08.12.'15	DETAILED DESIGN SUBMISSION	SR	MP	MA
0	22.10.'15	CONCEPT DESIGN SUBMISSION	SR	MP	MA

REVISION

CLIENT

MINISTRY OF ENVIRONMENT & ENERGY
REPUBLIC OF MALDIVES

CONSULTANT:

دار الحبشي للاستشارات الهندسية
Al Habshi Consultants Office

PROJECT:
Consultancy Services for Survey, Design of Water supply Facilities in Tha.Vilifushi, F.Nilandhoo, B.Eydhafushi and Adh. Hanyaameedhoo, Maldives

DRAWING TITLE:
LIST OF DRAWINGS
B.EYDHAFUSHI ISLAND

DESIGNED	DRAWN	CHECKED	APPROVED	SCALE	DATE
SK	JP	MP	MA	N.T.S	22.10.'15

PROJECT No.	SHEET No.	DRAWING No.
K-627	1 OF 1	BE-WS-100
REV. No.	0	

Copyright © 2016 by Al-Habshi Consultants Office

WATER SUPPLY DRAWINGS

NOTES:-

1. ALL DIMENSIONS SHOWN ARE IN MILLIMETERS (MM), UNLESS OTHERWISE SHOWN
2. ALL LEVELS SHOWN ARE IN METERS. ALL LEVELS SHOWN ARE FROM MEAN SEA LEVEL
3. THIS DRAWING TO BE READ IN CONJUNCTION WITH ALL OTHER RELEVANT DRAWINGS,GENERAL NOTES AND SPECIFICATIONS.

LEGEND:

- Ø100 WATER SUPPLY MAIN LINE
- Ø80 WATER SUPPLY LINE
- Ø80 HDPE BRINE OUTFALL
- WS - WATER SUPPLY
- HOUSE CONNECTION
- VALVE CHAMBER
- CHECK VALVE

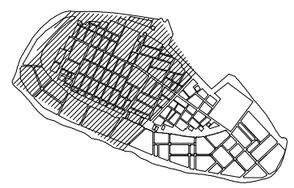

REFERENCE DRAWINGS

SL.No.	DRAWING No.	DESCRIPTION

REV.	DATE	DESCRIPTION	DRAWN	CHKD.	APPRD.
..	..	..	..	..	..
..	..	..	..	..	..
..	..	..	..	..	..
0	08.12.'15	DETAILED DESIGN SUBMISSION	SR	MP	MA
0	22.10.'15	CONCEPT DESIGN SUBMISSION	SR	MP	MA

REVISION

CLIENT

MINISTRY OF ENVIRONMENT & ENERGY
REPUBLIC OF MALDIVES

CONSULTANT:

دار الحبشي للاستشارات الهندسية
Al Habshi Consultants Office
+965 2246 6008 | +965 2246 6118 +965 2326 1135
admin@alhabshi.com.kw P.O. Box 21154, Safat 13132, Kuwait

PROJECT:
Consultancy Services for Survey, Design of Water supply Facilities in Tha.Vilifushi, F.Nilandhoo, B.Eydhafushi and Adh. Hanyaameedhoo, Maldives

DRAWING TITLE:
WATER SUPPLY LAYOUT-PART-A
B.EYDHAFUSHI ISLAND

DESIGNED	DRAWN	CHECKED	APPROVED	SCALE	DATE
SK	JP	MP	MA	1 : 2500	18.10.'15

PROJECT No.	SHEET No.	DRAWING No.
K-627	1 OF 2	BE-WS-101
REV. No.	0	

Copyright © 2016 by Al-Habshi Consultants Office

NOTES:-

1. ALL DIMENSIONS SHOWN ARE IN MILLIMETERS (MM), UNLESS OTHERWISE SHOWN
2. ALL LEVELS SHOWN ARE IN METERS. ALL LEVELS SHOWN ARE FROM MEAN SEA LEVEL
3. THIS DRAWING TO BE READ IN CONJUNCTION WITH ALL OTHER RELEVANT DRAWINGS,GENERAL NOTES AND SPECIFICATIONS.

LEGEND:

- Ø100 WATER SUPPLY MAIN LINE
- Ø80 WATER SUPPLY LINE
- Ø80 HDPE BRINE OUTFALL
- WS - WATER SUPPLY
- HOUSE CONNECTION
- VALVE CHAMBER
- CHECK VALVE

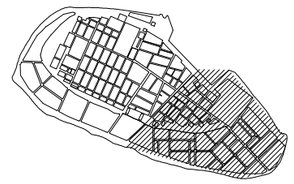

REFERENCE DRAWINGS

SL.No.	DRAWING No.	DESCRIPTION

REVISION

REV.	DATE	DESCRIPTION	DRAWN	CHKD.	APPRD.
..	..	..	..	..	..
..	..	..	.	..	..
..	..	..	..	..	..
0	08.12.'15	DETAILED DESIGN SUBMISSION	SR	MP	MA
0	22.10.'15	CONCEPT DESIGN SUBMISSION	SR	MP	MA

CLIENT

MINISTRY OF ENVIRONMENT & ENERGY
REPUBLIC OF MALDIVES

CONSULTANT:

دار الحبشي للاستشارات الهندسية
Al Habshi Consultants Office
+965 2246 6006 | +965 2246 9158 | +965 2246 1106
admin@alhabshiconsult | P.O. Box 27156, Safat 13132, Kuwait

PROJECT:
Consultancy Services for Survey, Design of Water supply Facilities in Tha.Vilifushi, F.Nilandhoo, B.Eydhafushi and Adh. Hanyaameedhoo, Maldives

DRAWING TITLE:
WATER SUPPLY LAYOUT-PART-B
B.EYDHAFUSHI ISLAND

DESIGNED	DRAWN	CHECKED	APPROVED	SCALE	DATE
SK	JP	MP	MA	1 : 2500	18.10.'15

PROJECT No.	SHEET No.	DRAWING No.
K-627	2 OF 2	BE-WS-101
REV. No.	0	

Copyright © 2016 by Al-Habshi Consultants Office

NOTES:-

1. ALL DIMENSIONS SHOWN ARE IN MILLIMETERS (MM), UNLESS OTHERWISE SHOWN
2. ALL LEVELS SHOWN ARE IN METERS. ALL LEVELS SHOWN ARE FROM MEAN SEA LEVEL
3. THIS DRAWING TO BE READ IN CONJUNCTION WITH ALL OTHER RELEVANT DRAWINGS,GENERAL NOTES AND SPECIFICATIONS.

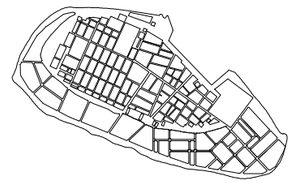

REFERENCE DRAWINGS

SL.No	DRAWING No.	DESCRIPTION

REVISION

REV.	DATE	DESCRIPTION	DRAWN	CHKD.	APPRD.
..	..	..	..	..	..
..	..	..	.	..	..
..	..	..	..	..	..
0	08.12.'15	DETAILED DESIGN SUBMISSION	SR	MP	MA
0	22.10.'15	CONCEPT DESIGN SUBMISSION	SR	MP	MA

CLIENT

MINISTRY OF ENVIRONMENT & ENERGY
REPUBLIC OF MALDIVES

CONSULTANT:

دار الحبشي للاستشارات الهندسية
Al Habshi Consultants Office
+965 2240 0008 | +965 2240 0118 +965 2240 1135
admin@alhabshiaco.com P.O. Box 27154, Safat 13132, Kuwait

PROJECT:
Consultancy Services for Survey, Design of Water supply Facilities in Tha.Vilifushi, F.Nilandhoo, B.Eydhafushi and Adh. Hanyaameedhoo, Maldives

DRAWING TITLE:
RAIN WATER COLLECTION LAYOUT
B.EYDHAFUSHI ISLAND

DESIGNED	DRAWN	CHECKED	APPROVED	SCALE	DATE
SK	JP	MP	MA	1 : 2500	18.10.'15
PROJECT No.	SHEET No.	DRAWING No.			
K-627	1 OF 1	BE-WS-102			
REV. No.	0				

Copyright © 2016 by Al-Habshi Consultants Office

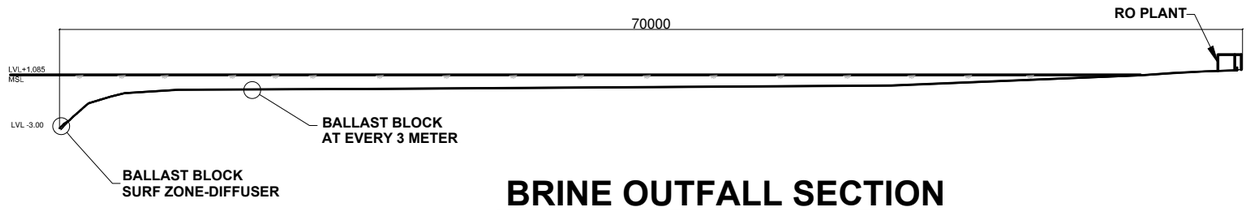

BRINE OUTFALL SECTION

NOTES:-

1. ALL DIMENSIONS SHOWN ARE IN MILLIMETERS (MM), UNLESS OTHERWISE SHOWN
2. ALL LEVELS SHOWN ARE IN METERS. ALL LEVELS SHOWN ARE FROM MEAN SEA LEVEL
3. THIS DRAWING TO BE READ IN CONJUNCTION WITH ALL OTHER RELEVANT DRAWINGS,GENERAL NOTES AND SPECIFICATIONS.

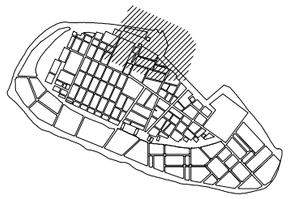

REFERENCE DRAWINGS

SL.No.	DRAWING No.	DESCRIPTION

REVISION

REV.	DATE	DESCRIPTION	DRAWN	CHKD.	APPRD.
..	..	..	..	..	..
..	..	..	.	..	..
..	..	..	..	..	..
0	08.12.'15	DETAILED DESIGN SUBMISSION	SR	MP	MA
0	22.10.'15	CONCEPT DESIGN SUBMISSION	SR	MP	MA

CLIENT
MINISTRY OF ENVIRONMENT & ENERGY
REPUBLIC OF MALDIVES

CONSULTANT:
دار الحبشي للاستشارات الهندسية
Al Habshi Consultants Office

PROJECT:
Consultancy Services for Survey, Design of Water supply Facilities in Tha.Vilifushi, F.Nilandhoo, B.Eydhafushi and Adh. Hanyaameedhoo, Maldives

DRAWING TITLE:
BRINE OUTFALL LAYOUT & SECTION
B.EYDHAFUSHI ISLAND

DESIGNED	DRAWN	CHECKED	APPROVED	SCALE	DATE
SK	JP	MP	MA	1 : 2500	18.10.'15

PROJECT No.	SHEET No.	DRAWING No.
K-627	1 OF 2	BE-WS-103
REV. No.	0	

Copyright © 2016 by Al-Habshi Consultants Office

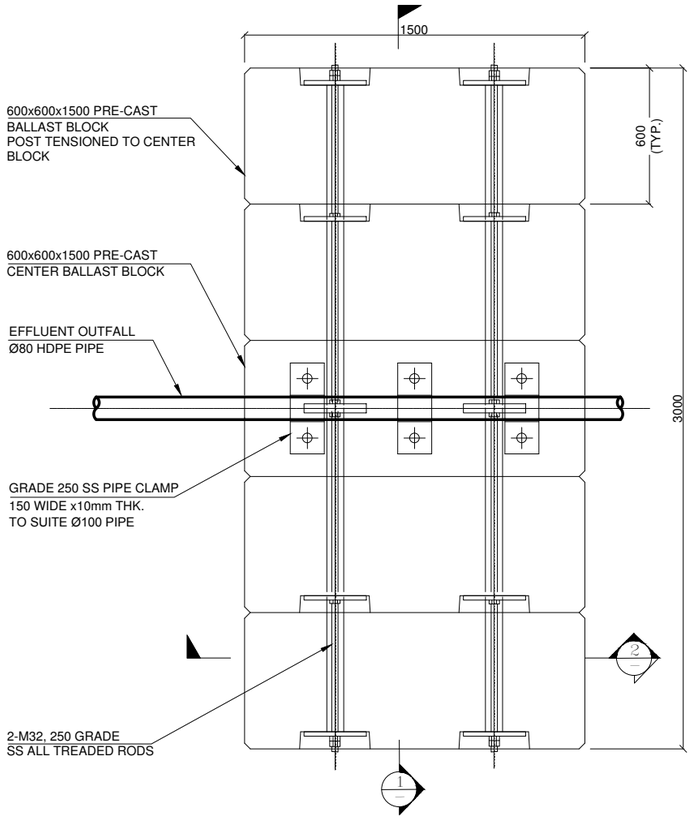

BALLAST BLOCK
SURF ZONE–DIFFUSER

SCALE 1:25

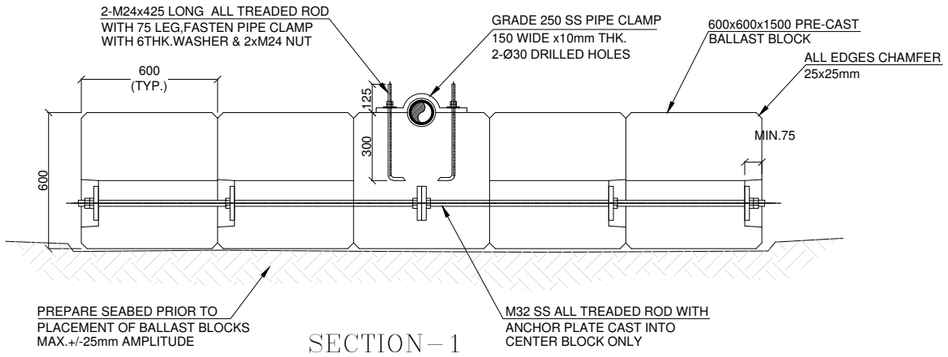

SECTION–1

SCALE 1:25

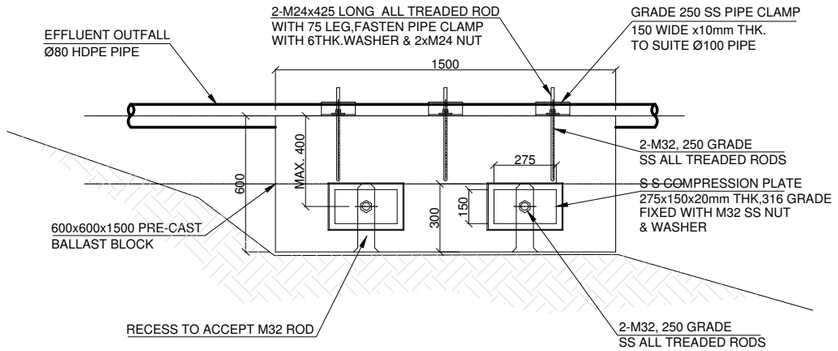

SECTION–2

SCALE 1:25

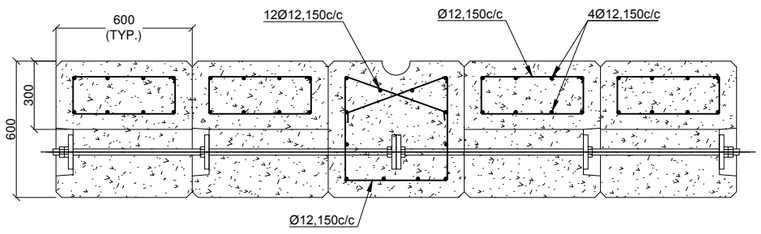

SECTION–1

REINFORCEMENT DETAILS

SCALE 1:25

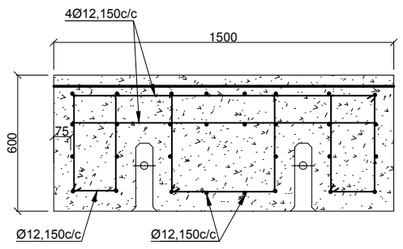

SECTION–2

REINFORCEMENT DETAILS

SCALE 1:25

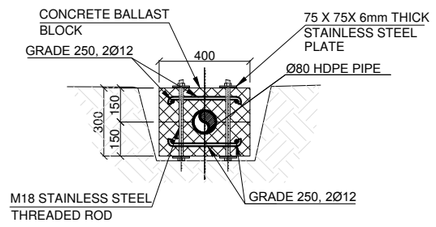

SECTION–3

SCALE 1:25

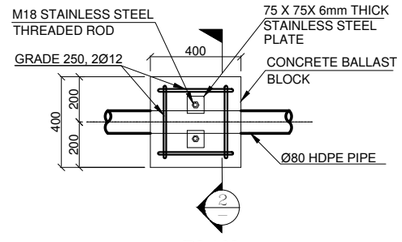

PLAN

RCC BALLAST BLOCK

NOTES:-

1. ALL DIMENSIONS SHOWN ARE IN MILLIMETERS (MM), UNLESS OTHERWISE SHOWN
2. THIS DRAWING TO BE READ IN CONJUNCTION WITH ALL OTHER RELEVANT DRAWINGS,GENERAL NOTES AND SPECIFICATIONS.

REFERENCE DRAWINGS

SL.No.	DRAWING No.	DESCRIPTION

REVISION

REV.	DATE	DESCRIPTION	DRAWN	CHKD.	APPRD.
..	..	..	..	..	..
..	..	..	.	..	..
..	..	..	..	..	..
0	08.12.'15	DETAILED DESIGN SUBMISSION	SR	MP	MA
0	22.10.'15	CONCEPT DESIGN SUBMISSION	SR	MP	MA

CLIENT

MINISTRY OF ENVIRONMENT & ENERGY
REPUBLIC OF MALDIVES

CONSULTANT:

دار الحبشي للاستشارات الهندسية
Al Habshi Consultants Office

PROJECT:

Consultancy Services for Survey, Design of Water supply Facilities in Tha.Vilifushi, F.Nilandhoo, B.Eydhafushi and Adh. Hanyaameedhoo, Maldives

DRAWING TITLE:

BRINE OUTFALL DETAILS
B.EYDHAFUSHI ISLAND

DESIGNED	DRAWN	CHECKED	APPROVED	SCALE	DATE
SK	JP	MP	MA	AS SHOWN	18.10.'15

PROJECT No.	SHEET No.	DRAWING No.
K-627	2 OF 2	BE-WS-103
REV. No.	0	

Copyright © 2016 by Al-Habshi Consultants Office

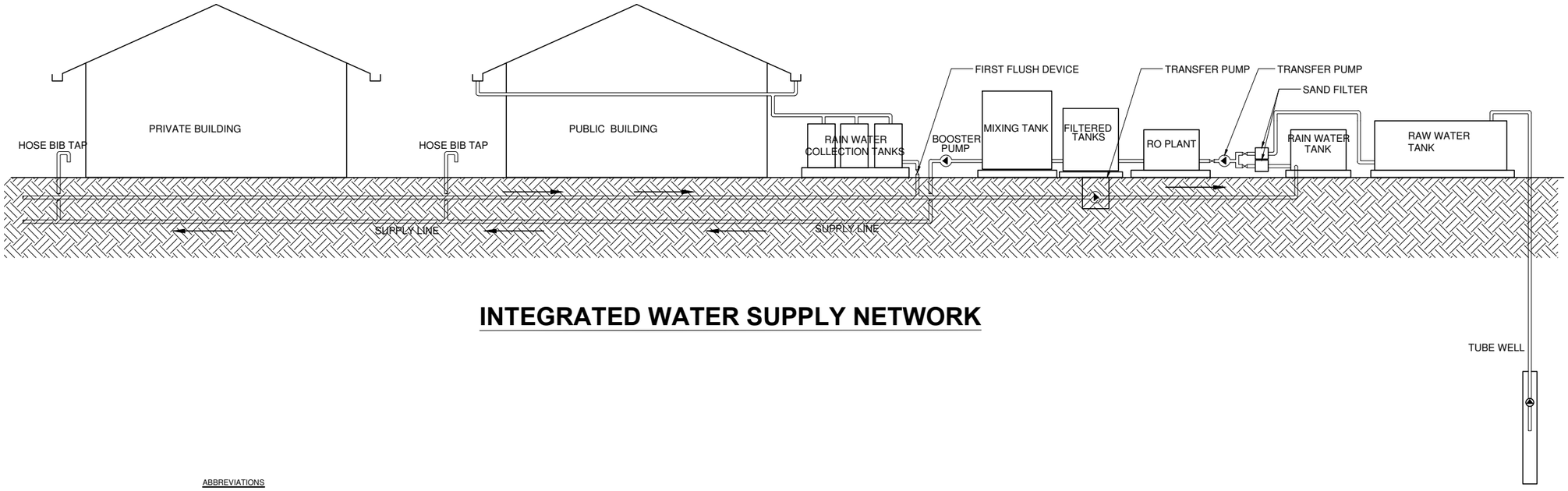

INTEGRATED WATER SUPPLY NETWORK

ABBREVIATIONS

SF	-SAND FILTER
RO	-REVERSE OSMOSIS TANK
HBT	-HOSE BIB TAP
RWS	-RAIN WATER SUPPLY
WS	-WATER SUPPLY
TP	-TRANSFER PUMP
RWCP	-RAINWATER COLLECTION PIPE
TP	-TRANSFER PUMP
BP	-BOOSTER PUMP

REFERENCE DRAWINGS

SL.No.	DRAWING No.	DESCRIPTION

REVISION

REV.	DATE	DESCRIPTION	DRAWN	CHKD.	APPRD.
..	..	..	..	..	..
..	..	..	.	..	..
..	..	..	..	..	..
0	08.12.'15	DETAILED DESIGN SUBMISSION	SR	MP	MA
0	22.10.'15	CONCEPT DESIGN SUBMISSION	SR	MP	MA

CLIENT

MINISTRY OF ENVIRONMENT & ENERGY
REPUBLIC OF MALDIVES

CONSULTANT:

دار الحبشي للاستشارات الهندسية
Al Habshi Consultants Office
+960 2240 6008 | +960 2240 9118 +960 2243 1136
admin@alhabshiacom P.O. Box 2775A, Male 13102, Maldives

PROJECT:
Consultancy Services for Survey, Design of Water supply Facilities in Tha.Vilifushi, F.Nilandhoo, B.Eydhafushi and Adh. Hanyaameedhoo, Maldives

DRAWING TITLE:
INTEGRATED WATER SUPPLY NETWORK
SCHEMATIC-B.EYDHAFUSHI ISLAND

DESIGNED	DRAWN	CHECKED	APPROVED	SCALE	DATE
SK	JP	MP	MA	N.T.S	08.12.'15

PROJECT No.	SHEET No.	DRAWING No.
K-627	1 OF 1	BE-WS-104
REV. No.	0	

Copyright © 2016 by Al-Habshi Consultants Office

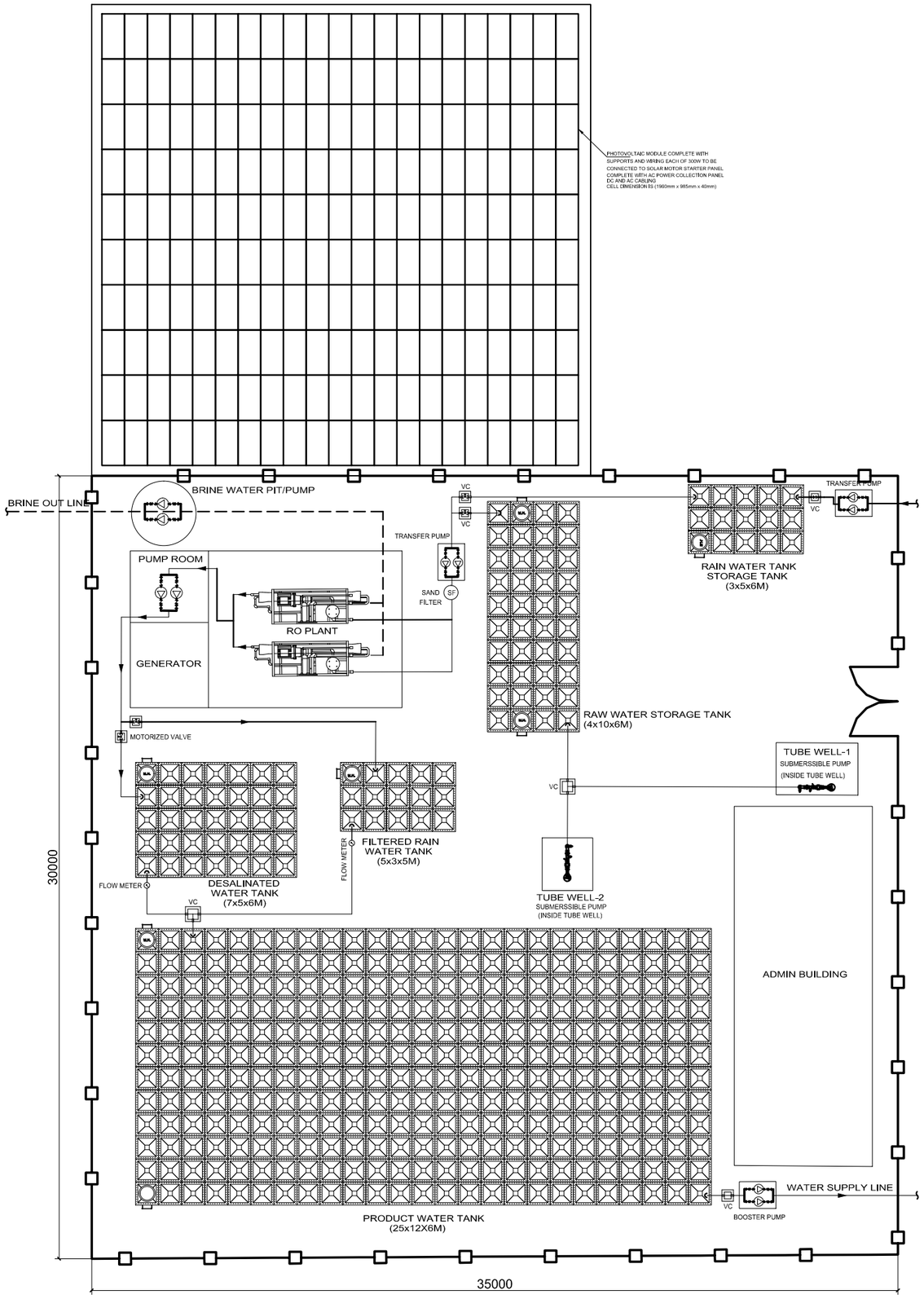

NOTES:-

1. ALL DIMENSIONS SHOWN ARE IN MILLIMETERS (MM), UNLESS OTHERWISE SHOWN
2. ALL LEVELS SHOWN ARE IN METERS. ALL LEVELS SHOWN ARE FROM MEAN SEA LEVEL
3. THIS DRAWING TO BE READ IN CONJUNCTION WITH ALL OTHER RELEVANT DRAWINGS,GENERAL NOTES AND SPECIFICATIONS.

REFERENCE DRAWINGS

SL.No.	DRAWING No.	DESCRIPTION

REVISION

REV.	DATE	DESCRIPTION	DRAWN	CHKD.	APPRD.
..	..	..	..	..	..
..	..	..	.	..	..
..	..	..	..	..	..
0	08.12.'15	DETAILED DESIGN SUBMISSION	SR	MP	MA
0	22.10.'15	CONCEPT DESIGN SUBMISSION	SR	MP	MA

CLIENT

MINISTRY OF ENVIRONMENT & ENERGY
REPUBLIC OF MALDIVES

CONSULTANT:

دار الحبشي للاستشارات الهندسية
Al Habshi Consultants Office

PROJECT:
Consultancy Services for Survey, Design of Water supply Facilities in Tha.Vilifushi, F.Nilandhoo, B.Eydhafushi and Adh. Hanyaameedhoo, Maldives

DRAWING TITLE:
RO PLANT LAYOUT
B.EYDHAFUSHI ISLAND

DESIGNED	DRAWN	CHECKED	APPROVED	SCALE	DATE
SK	JP	MP	MA	1 : 150	22.10.'15

PROJECT No.	SHEET No.	DRAWING No.
K-627	1 OF 1	BE-WS-105
REV. No.	0	

Copyright © 2016 by Al-Habshi Consultants Office

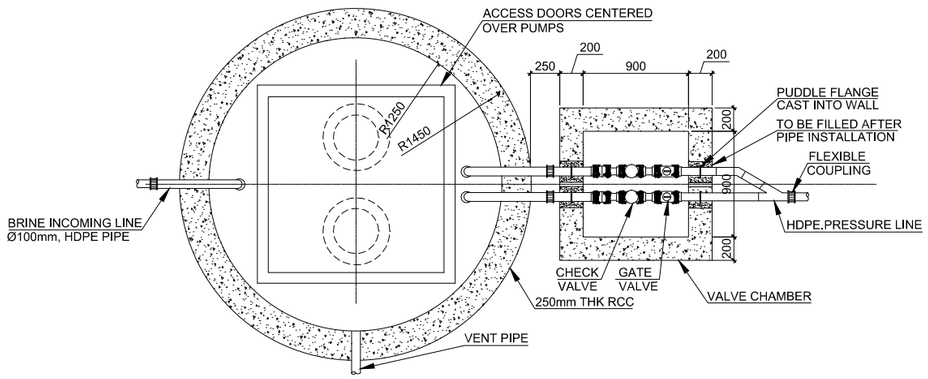

BRINE PUMP DETAILS - PLAN

SCALE - 1 : 50

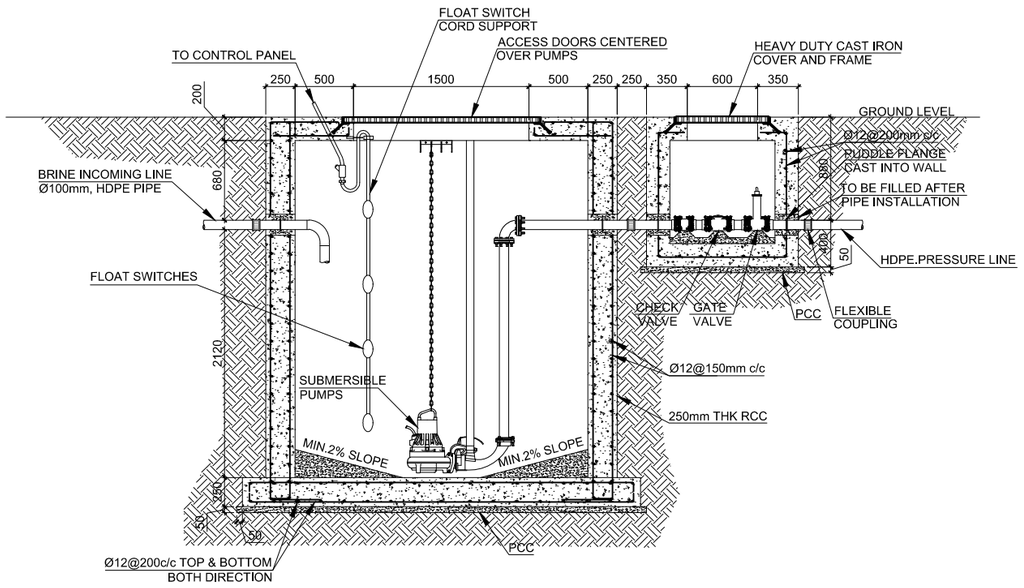

BRINE PUMP DETAILS - SECTION

SCALE - 1 : 50

NOTES:-

1. ALL DIMENSIONS SHOWN ARE IN MILLIMETERS (MM), UNLESS OTHERWISE SHOWN
2. ALL LEVELS SHOWN ARE IN METERS. ALL LEVELS SHOWN ARE FROM MEAN SEA LEVEL
3. THIS DRAWING TO BE READ IN CONJUNCTION WITH ALL OTHER RELEVANT DRAWINGS,GENERAL NOTES AND SPECIFICATIONS.

REFERENCE DRAWINGS

SL.No.	DRAWING No.	DESCRIPTION

REV.	DATE	DESCRIPTION	DRAWN	CHKD.	APPRD.
..	..	..	..	..	..
..	..	..	.	..	..
..	..	..	..	..	..
0	08.12.'15	DETAILED DESIGN SUBMISSION	SR	MP	MA
0	22.10.'15	CONCEPT DESIGN SUBMISSION	SR	MP	MA

REVISION

CLIENT

MINISTRY OF ENVIRONMENT & ENERGY
REPUBLIC OF MALDIVES

CONSULTANT:

Al Habshi Consultants Office

PROJECT:
Consultancy Services for Survey, Design of Water supply Facilities in Tha.Vilifushi, F.Nilandhoo, B.Eydhafushi and Adh. Hanyaameedhoo, Maldives

DRAWING TITLE:
BRINE PUMP DETAILS
B.EYDHAFUSHI ISLAND

DESIGNED	DRAWN	CHECKED	APPROVED	SCALE	DATE
SK	JP	MP	MA	1 : 50	08.12.'15

PROJECT No.	SHEET No.	DRAWING No.
K-627	1 OF 1	BE-WS-106
REV. No.	0	

Copyright © 2016 by Al-Habshi Consultants Office

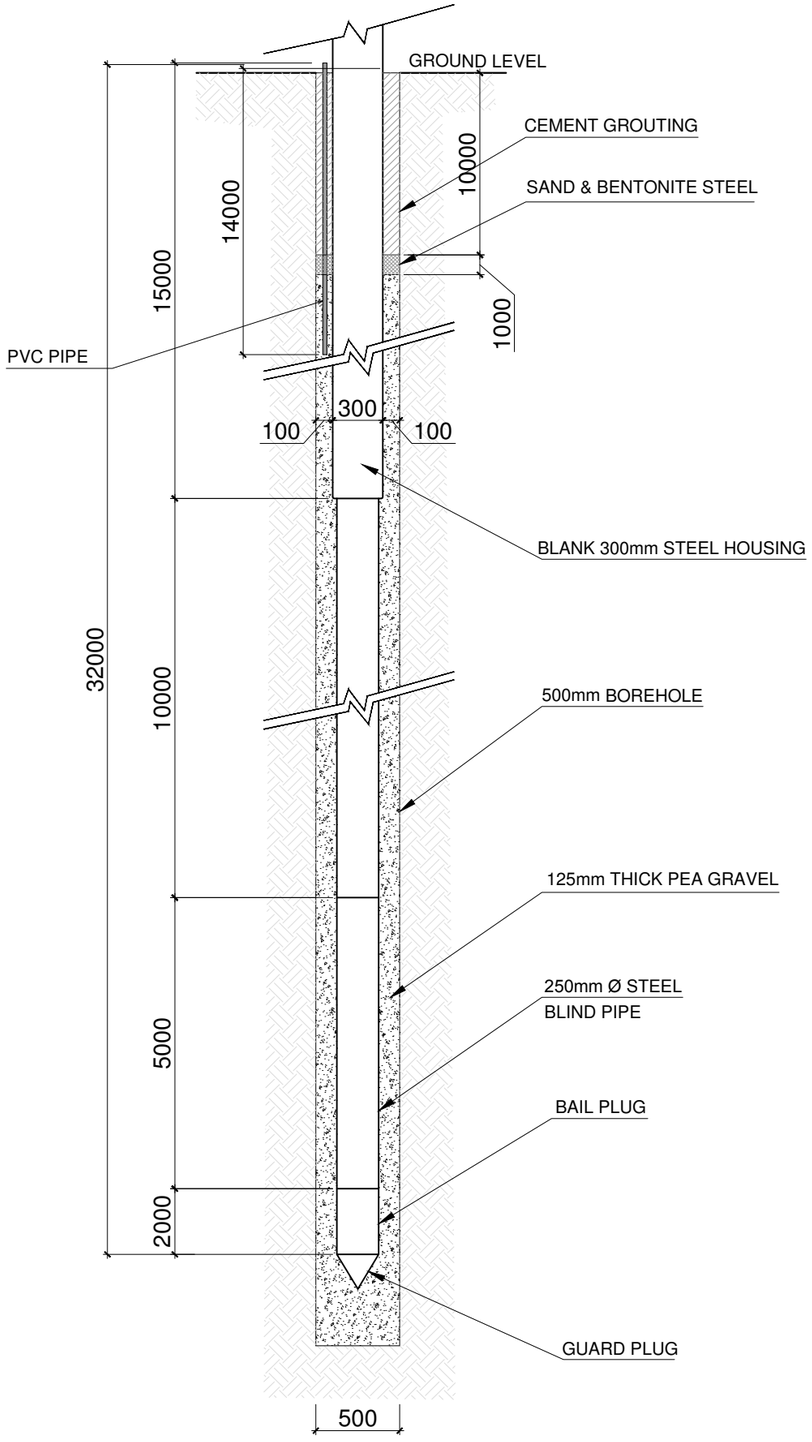

TUBE WELL DETAIL

NOTES:-

1. ALL DIMENSIONS SHOWN ARE IN MILLIMETERS (MM), UNLESS OTHERWISE SHOWN
2. ALL LEVELS SHOWN ARE IN METERS. ALL LEVELS SHOWN ARE FROM MEAN SEA LEVEL
3. THIS DRAWING TO BE READ IN CONJUNCTION WITH ALL OTHER RELEVANT DRAWINGS,GENERAL NOTES AND SPECIFICATIONS.

REFERENCE DRAWINGS

SL.No.	DRAWING No.	DESCRIPTION

REVISION

REV.	DATE	DESCRIPTION	DRAWN	CHKD.	APPRD.
..	..	..	..	..	..
..	..	..	.	..	..
..	..	..	..	..	..
0	08.12.'15	DETAILED DESIGN SUBMISSION	SR	MP	MA
0	22.10.'15	CONCEPT DESIGN SUBMISSION	SR	MP	MA

CLIENT
MINISTRY OF ENVIRONMENT & ENERGY
REPUBLIC OF MALDIVES

CONSULTANT:
دار الحبشي للاستشارات الهندسية
Al Habshi Consultants Office

PROJECT:
Consultancy Services for Survey, Design of Water supply Facilities in Tha.Vilifushi, F.Nilandhoo, B.Eydhafushi and Adh. Hanyaameedhoo, Maldives

DRAWING TITLE:
TUBE WELL DETAIL
B.EYDHAFUSHI ISLAND

DESIGNED	DRAWN	CHECKED	APPROVED	SCALE	DATE
SK	JP	MP	MA	N.T.S	08.12.'15

PROJECT No.	SHEET No.	DRAWING No.
K-627	1 OF 1	BE-WS-107
REV. No.	0	

Copyright © 2016 by Al-Habshi Consultants Office

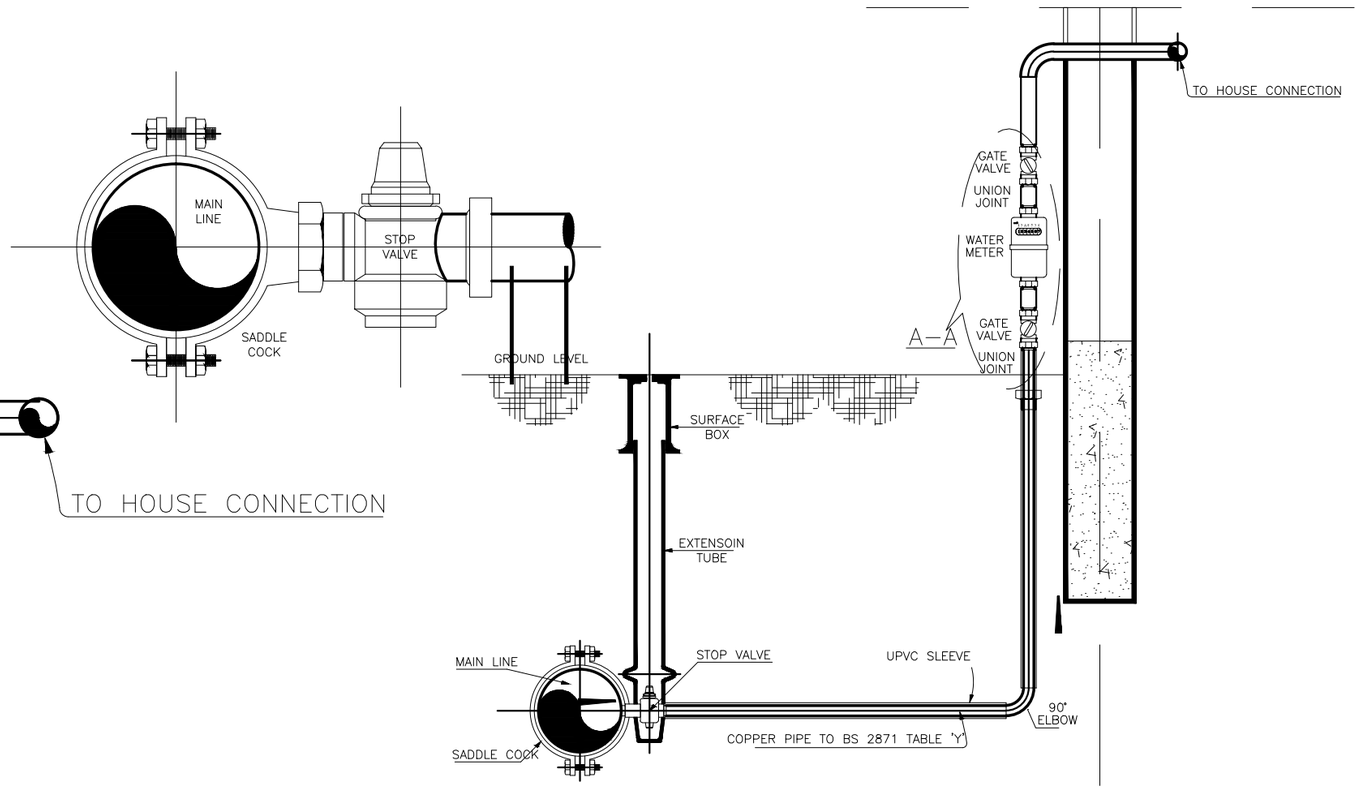

WATER METER DETAIL

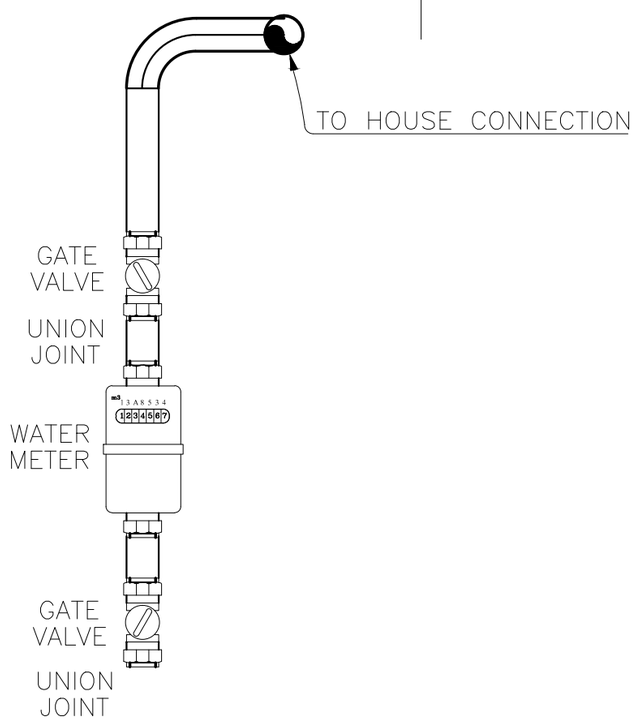

ENLARGED VIEW A-A

REFERENCE DRAWINGS

SL.No.	DRAWING No.	DESCRIPTION

REV.	DATE	DESCRIPTION	DRAWN	CHKD.	APPRD.
..	..	..	..	..	..
..	..	..	.	..	..
..	..	..	..	..	..
0	08.12.'15	DETAILED DESIGN SUBMISSION	SR	MP	MA
0	22.10.'15	CONCEPT DESIGN SUBMISSION	SR	MP	MA

REVISION

CLIENT

MINISTRY OF ENVIRONMENT & ENERGY
REPUBLIC OF MALDIVES

CONSULTANT:

دار الحبشي للاستشارات الهندسية
Al Habshi Consultants Office

PROJECT:
Consultancy Services for Survey, Design of Water supply Facilities in Tha.Vilifushi, F.Nilandhoo, B.Eydhafushi and Adh. Hanyaameedhoo, Maldives

DRAWING TITLE:
TYPICAL DETAILS-WATER SUPPLY - (SHEET-01)
B.EYDHAFUSHI ISLAND

DESIGNED	DRAWN	CHECKED	APPROVED	SCALE	DATE
SK	SR	MP	MA	AS SHOWN	08-12-'15
PROJECT No.	SHEET No.	DRAWING No.			
K-627	1 OF 4	BE-WS-109			
REV. No.	0				

Copyright © 2016 by Al-Habshi Consultants Office

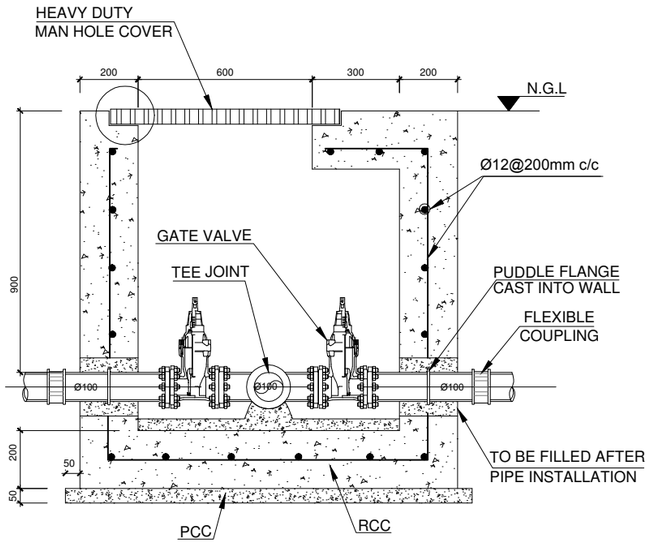

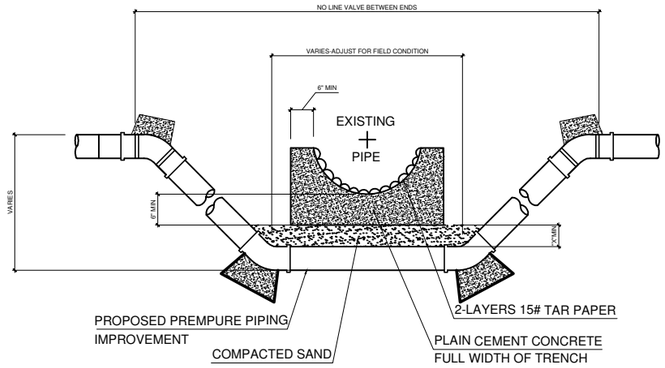

PIPE CROMPING DETAIL

NTS

"X" DIMENSION REQUIRMENTS

A - 6" FOR (GAS & OBT LINE CROMPING W/NO CRADLE NEEDED)
B - 18" FOR STORM SEWER PIPE
C - IF CROMPING SPACE IS MORE THAN MIN.SPACE OF CRADLE BELOE PIPE BOTTOM PLUS AFORMENTIONED "X" DIMENSION THEN EXTEND "X" DIMENSION TO MAKE UP DIFFERENCE.

CONCRETE CRADLE CONDITIONS

A - IF SANITORY OR SEWER PIPE JOINT IS WITHIN PROPOSED IMPROVEMENT TRENCH LIMIT
B - IF CROMPING SPACE IS LEMP THAN MIN.SPACE OF CRADLE BELOW PIPE BOTTOM PLUS "X" DIMENSION THEN OMIT SAND FILL AND USE CONCRETE

NOTE:-

USE OF BENDS & THRUST BLOCKS OR JOINT DEFLECTION TO BE DETERMINED IN FIELD FOR EACH CROMPING

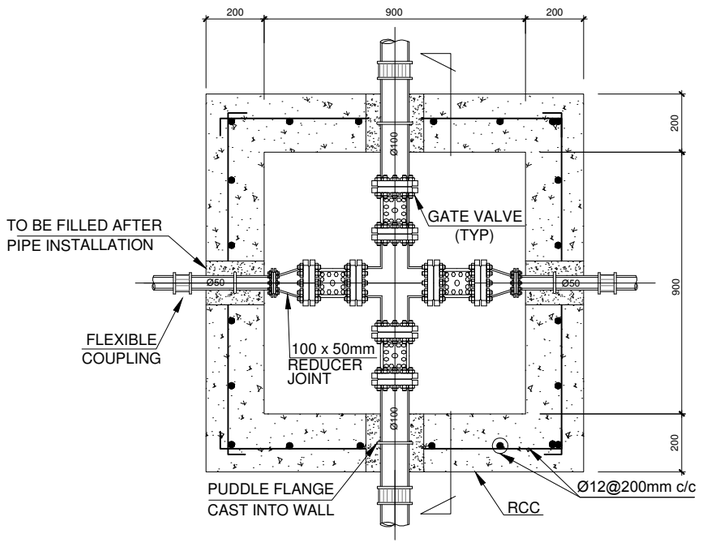

VALVE CHAMBER

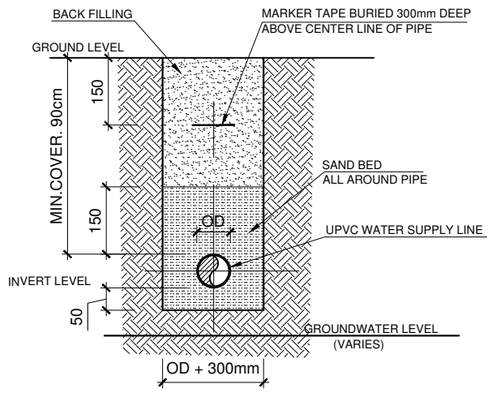

TYPICAL PIPE TRENCH DETAIL
(WATER TABLE BELOW TRENCH BASE)

N.T.S

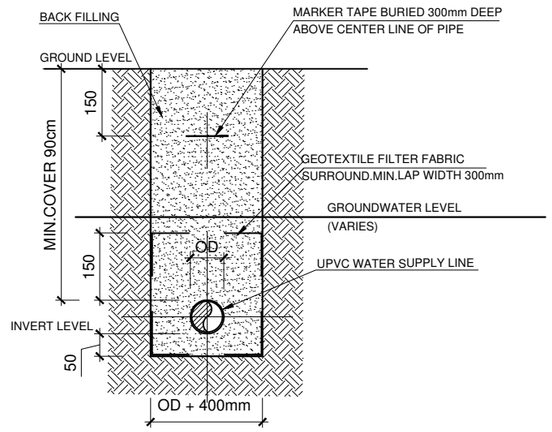

TYPICAL PIPE TRENCH DETAIL
(WATER TABLE ABOVE TRENCH BASE)

N.T.S

REFERENCE DRAWINGS

SL.No.	DRAWING No.	DESCRIPTION

REV.	DATE	DESCRIPTION	DRAWN	CHKD.	APPRD.
..	..	..	..	..	..
..	..	..	.	..	..
..	..	..	..	..	..
0	08.12.'15	DETAILED DESIGN SUBMISSION	SR	MP	MA
0	22.10.'15	CONCEPT DESIGN SUBMISSION	SR	MP	MA

REVISION

CLIENT
MINISTRY OF ENVIRONMENT & ENERGY
REPUBLIC OF MALDIVES

CONSULTANT:
دار الحبشي للاستشارات الهندسية
Al Habshi Consultants Office

PROJECT:
Consultancy Services for Survey, Design of Water supply Facilities in Tha.Vilifushi, F.Nilandhoo, B.Eydhafushi and Adh. Hanyaameedhoo, Maldives

DRAWING TITLE:
TYPICAL DETAILS-WATER SUPPLY - (SHEET-02)
B.EYDHAFUSHI ISLAND

DESIGNED	DRAWN	CHECKED	APPROVED	SCALE	DATE
SK	SR	MP	MA	AS SHOWN	08-12-'15
PROJECT No.	SHEET No.	DRAWING No.			
K-627	2 OF 4	BE-WS-109			
REV. No.	0				

Copyright © 2016 by Al-Habshi Consultants Office

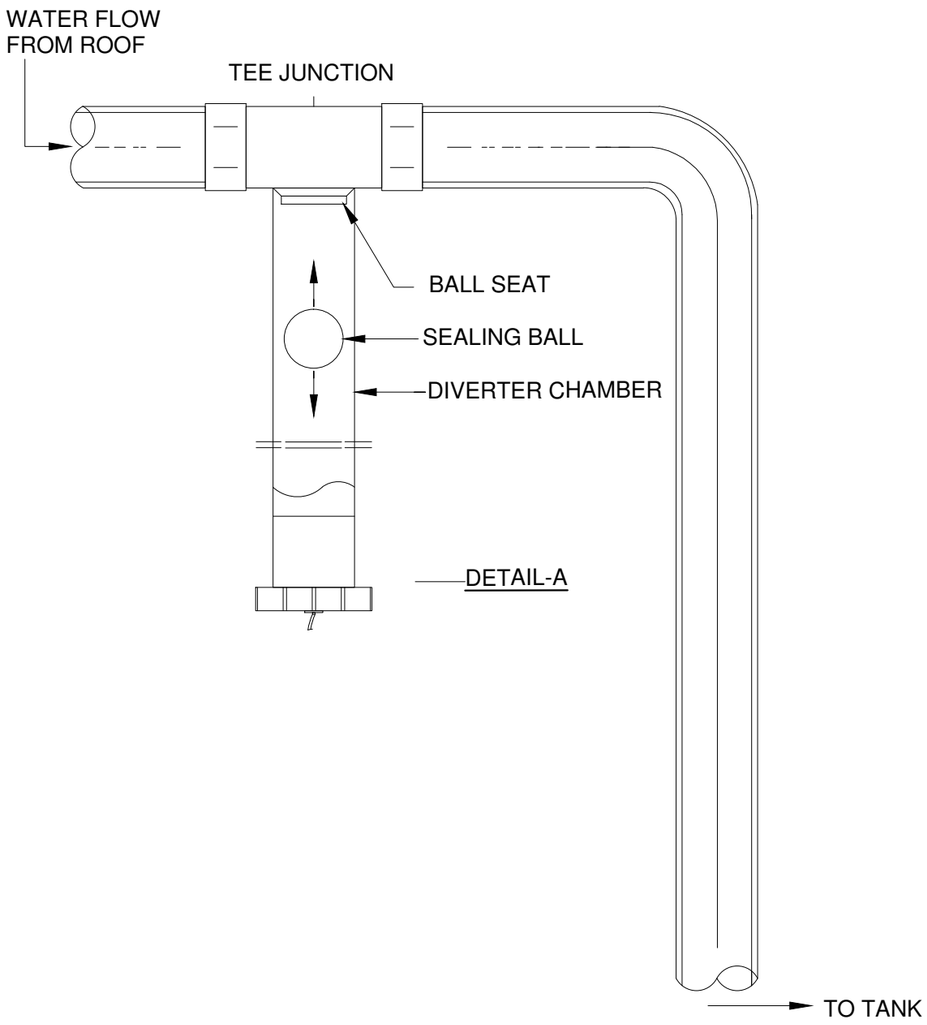

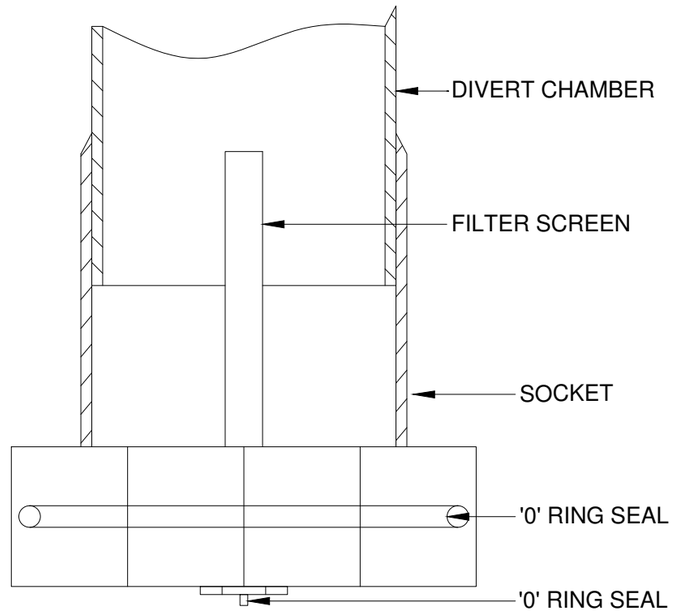

DETAIL-A

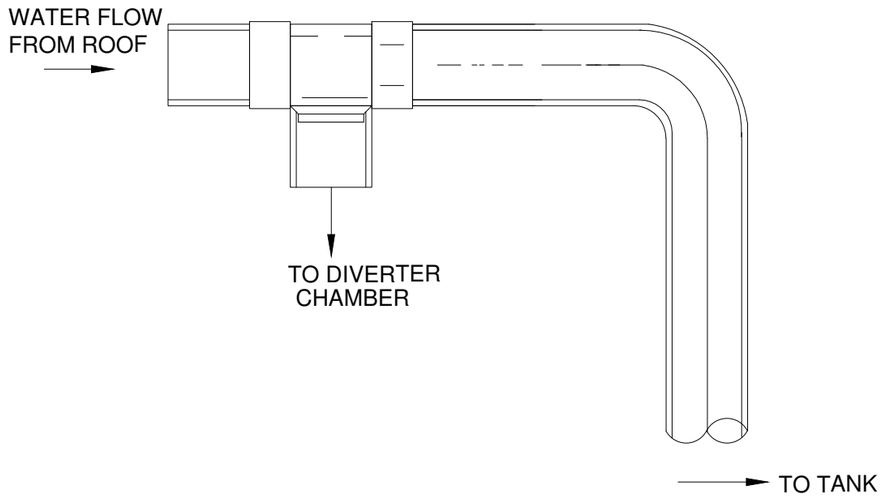

TYPICAL FIRST FLUSH DIVERTER

REFERENCE DRAWINGS

SL.No.	DRAWING No.	DESCRIPTION

REV.	DATE	DESCRIPTION	DRAWN	CHKD.	APPRD.
..	..	..	..	..	..
..	..	..	.	..	..
..	..	..	..	..	..
0	08.12.'15	DETAILED DESIGN SUBMISSION	SR	MP	MA
0	22.10.'15	CONCEPT DESIGN SUBMISSION	SR	MP	MA

REVISION

CLIENT
MINISTRY OF ENVIRONMENT & ENERGY
REPUBLIC OF MALDIVES

CONSULTANT:
دار الحبشي للاستشارات الهندسية
Al Habshi Consultants Office

PROJECT:
Consultancy Services for Survey, Design of Water supply Facilities in Tha.Vilifushi, F.Nilandhoo, B.Eydhafushi and Adh. Hanyaameedhoo, Maldives

DRAWING TITLE:
TYPICAL DETAILS-WATER SUPPLY - (SHEET-03)
B.EYDHAFUSHI ISLAND

DESIGNED	DRAWN	CHECKED	APPROVED	SCALE	DATE
SK	SR	MP	MA	AS SHOWN	08-12-'15

PROJECT No.	SHEET No.	DRAWING No.
K-627	3 OF 4	BE-WS-109
REV. No.	0	

Copyright © 2016 by Al-Habshi Consultants Office

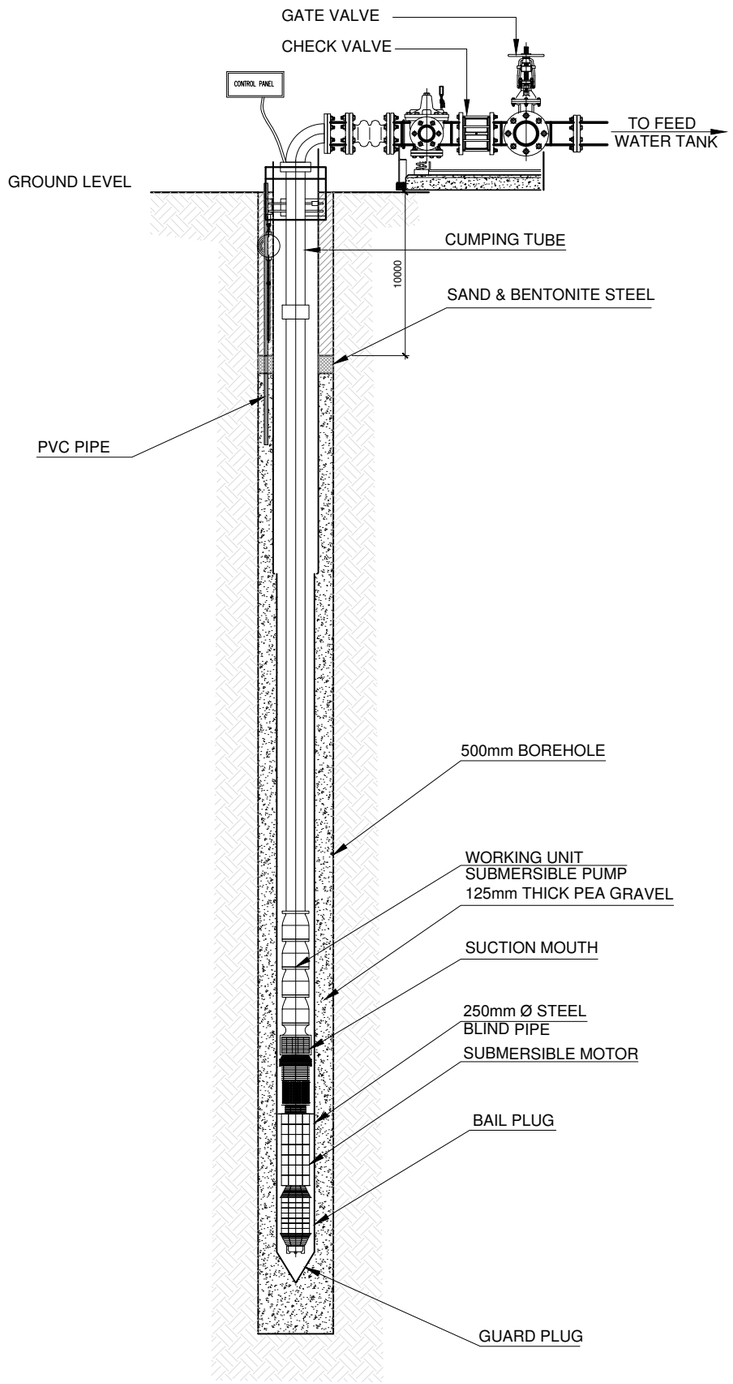

SUBMERSIBLE BORE WELL PUMP

REFERENCE DRAWINGS

SL.No.	DRAWING No.	DESCRIPTION

REV.	DATE	DESCRIPTION	DRAWN	CHKD.	APPRD.
..	..	..	..	..	..
..	..	..	.	..	..
..	..	..	..	..	..
0	08.12.'15	DETAILED DESIGN SUBMISSION	SR	MP	MA
0	22.10.'15	CONCEPT DESIGN SUBMISSION	SR	MP	MA

REVISION

CLIENT
MINISTRY OF ENVIRONMENT & ENERGY
REPUBLIC OF MALDIVES

CONSULTANT:
دار الحبشي للاستشارات الهندسية
Al Habshi Consultants Office

PROJECT:
Consultancy Services for Survey, Design of Water supply Facilities in Tha.Vilifushi, F.Nilandhoo, B.Eydhafushi and Adh. Hanyaameedhoo, Maldives

DRAWING TITLE:
TYPICAL DETAILS-WATER SUPPLY - (SHEET-04)
B.EYDHAFUSHI ISLAND

DESIGNED	DRAWN	CHECKED	APPROVED	SCALE	DATE
SK	SR	MP	MA	AS SHOWN	08-12-'15
PROJECT No.	SHEET No.	DRAWING No.			
K-627	4 OF 4	BE-WS-109			
REV. No.	0				

Copyright © 2016 by Al-Habshi Consultants Office

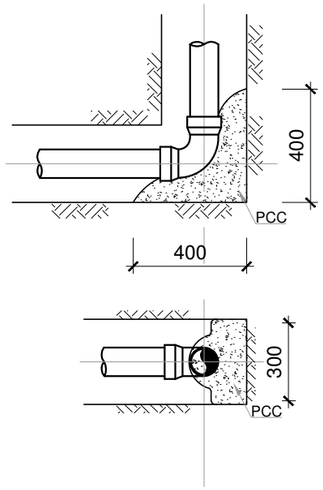

9O° HORIZONTAL BEND (BTM)
FOR Ø100 WS PIPE

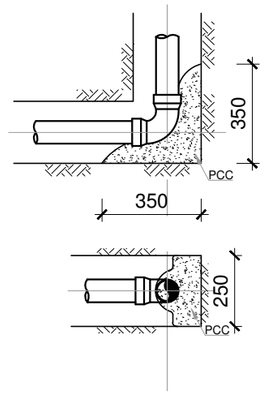

9O° HORIZONTAL BEND (BTM)
FOR Ø80 WS PIPE

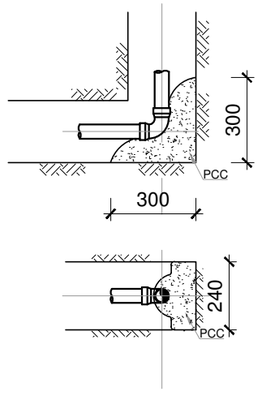

9O° VERTICAL BEND (BTM)
FOR Ø50 WS PIPE

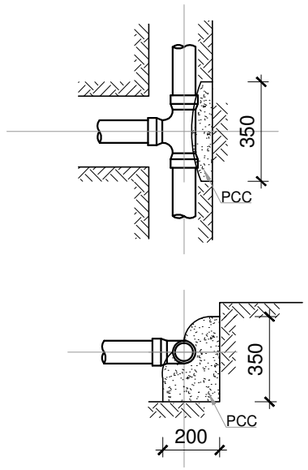

ANGLE BRANCH & TEE
FOR Ø80 WS PIPE

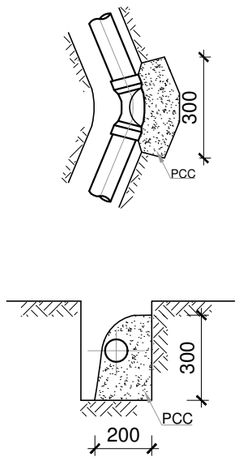

HORIZONTAL BEND
FOR Ø80 WS PIPE

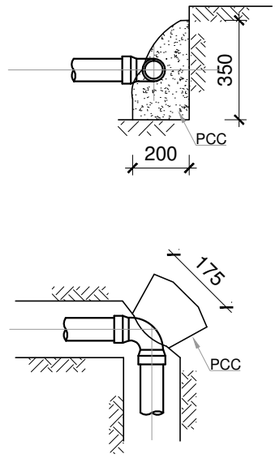

9O° VERTICAL BEND (BTM)
FOR Ø80 WS PIPE

REFERENCE DRAWINGS

SL.No.	DRAWING No.	DESCRIPTION

REV.	DATE	DESCRIPTION	DRAWN	CHKD.	APPRD.
..	..	..	..	..	..
..	..	..	.	..	..
..	..	..	..	..	..
0	08.12.'15	DETAILED DESIGN SUBMISSION	SR	MP	MA
0	22.10.'15	CONCEPT DESIGN SUBMISSION	SR	MP	MA

REVISION

CLIENT
MINISTRY OF ENVIRONMENT & ENERGY
REPUBLIC OF MALDIVES

CONSULTANT:
Aco | دار الحبشي للاستشارات الهندسية
Al Habshi Consultants Office
+965 2246 8300 | +965 2246 9778 +965 2246 1126
admin@alhabshiaco.com P.O. Box 21154, Safat 13132, Kuwait

PROJECT:
Consultancy Services for Survey, Design of Water supply Facilities in Tha.Vilifushi, F.Nilandhoo, B.Eydhafushi and Adh. Hanyaameedhoo, Maldives

DRAWING TITLE:
TYPICAL PIPE BENDING DETAILS
B.EYDHAFUSHI ISLAND

DESIGNED	DRAWN	CHECKED	APPROVED	SCALE	DATE
SK	SR	MP	MA	AS SHOWN	08-12-'15
PROJECT No.	SHEET No.	DRAWING No.			
K-627	1 OF 1	BE-WS-110			
REV. No.	0				

Copyright © 2016 by Al-Habshi Consultants Office

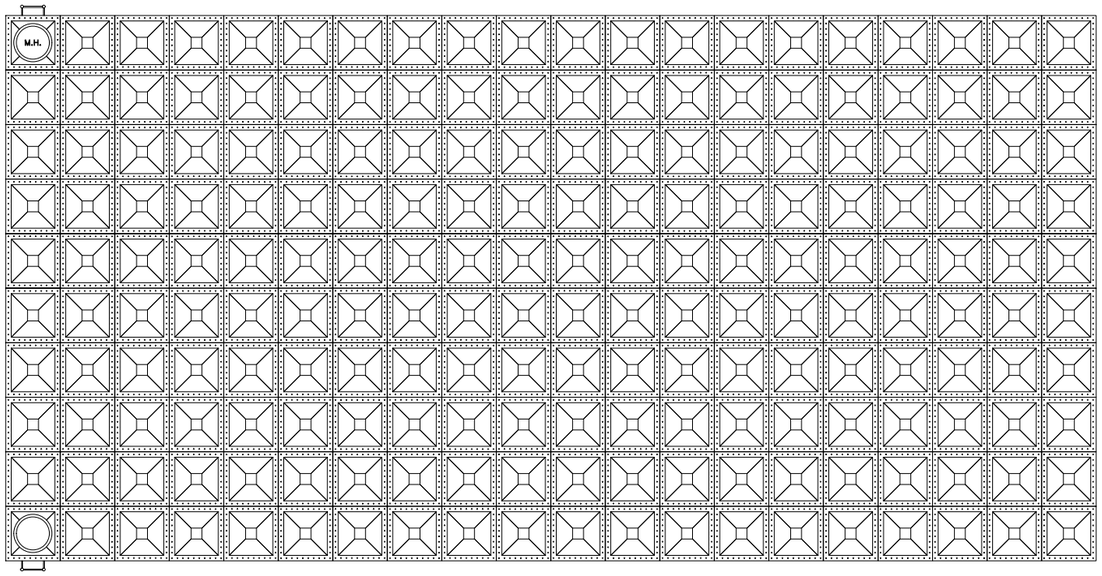

PLAN GRP WATER TANK

1) Size : 4000x10000x6000mm
2) Size : 3000x5000x6000mm
3) Size : 7000x5000x6000mm
4) Size : 5000x3000x5000mm
5) Size : 25000x12000x6000mm

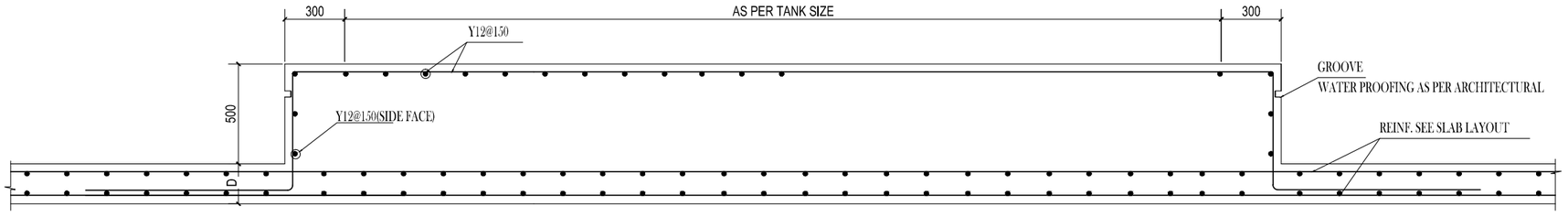

TYP.R.C DETAIL FOR ABOVE GROUND GRP TANK

SCALE N.T.S

1. ALL DIMENSION ARE IN MILLIMETER,UNLESS OTHERWISE NOTED
2. ALL LEVELS SHOWN ARE IN METERS.
3. THIS DRAWING TO BE READ IN CONJUNCTION WITH ALL OTHER RELEVANT DRAWINGS,GENERAL NOTES AND SPECIFICATIONS.
4. THE DESIGN IS INDICATIVE ONLY, THE CONTRACTOR TO DESIGN & BUILD THE TANK TOWER STRUCTURE.
5. WATER STOPS SHALL BE 210x9mm THICK MULTI-RIB TYPE WITH CANTER BULB FOR CONSTRUCTION,CONTROL AND EXPANSION JOINTS.

REFERENCE DRAWINGS

SL.No.	DRAWING No.	DESCRIPTION

REVISION

REV.	DATE	DESCRIPTION	DRAWN	CHKD.	APPRD.
..	..	..	..	..	..
..	..	..	.	..	..
..	..	..	..	..	..
0	08.12.'15	DETAILED DESIGN SUBMISSION	SR	MP	MA
0	22.10.'15	CONCEPT DESIGN SUBMISSION	SR	MP	MA

CLIENT
MINISTRY OF ENVIRONMENT & ENERGY
REPUBLIC OF MALDIVES

CONSULTANT:
دار الحبشي للاستشارات الهندسية
Al Habshi Consultants Office
+965 2246 6006 | +965 2246 6116 +965 2243 1135
admin@alhabshiaco.com P.O. Box 21154, Safat 13152, Kuwait

PROJECT:
Consultancy Services for Survey, Design of Water supply Facilities in Tha.Vilifushi, F.Nilandhoo, B.Eydhafushi and Adh. Hanyaameedhoo, Maldives

DRAWING TITLE:
GRP WATER TANK
B.EYDHAFUSHI ISLAND

DESIGNED	DRAWN	CHECKED	APPROVED	SCALE	DATE
SK	SR	MP	MA	AS SHOWN	08-12-'15
PROJECT No.	SHEET No.	DRAWING No.			
K-627	1 OF 1	BE-WS-111			
REV. No.	0				

Copyright © 2016 by Al-Habshi Consultants Office

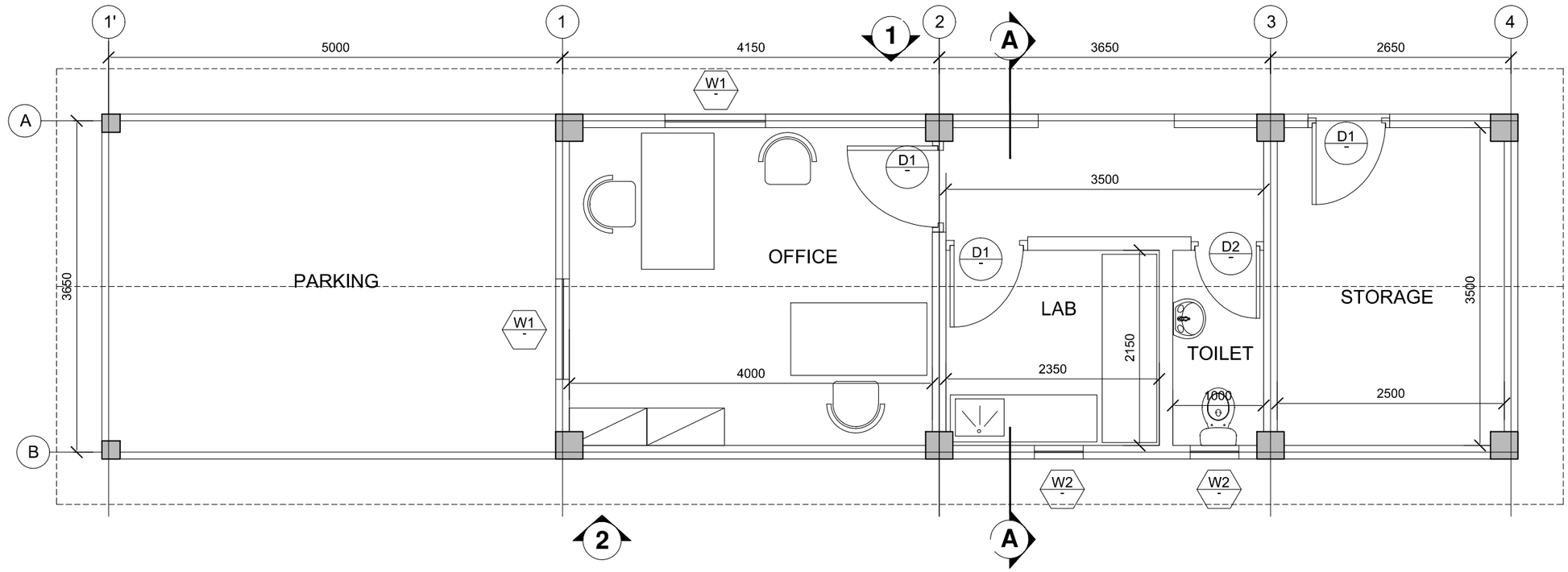

FLOOR PLAN

SCALE 1:100

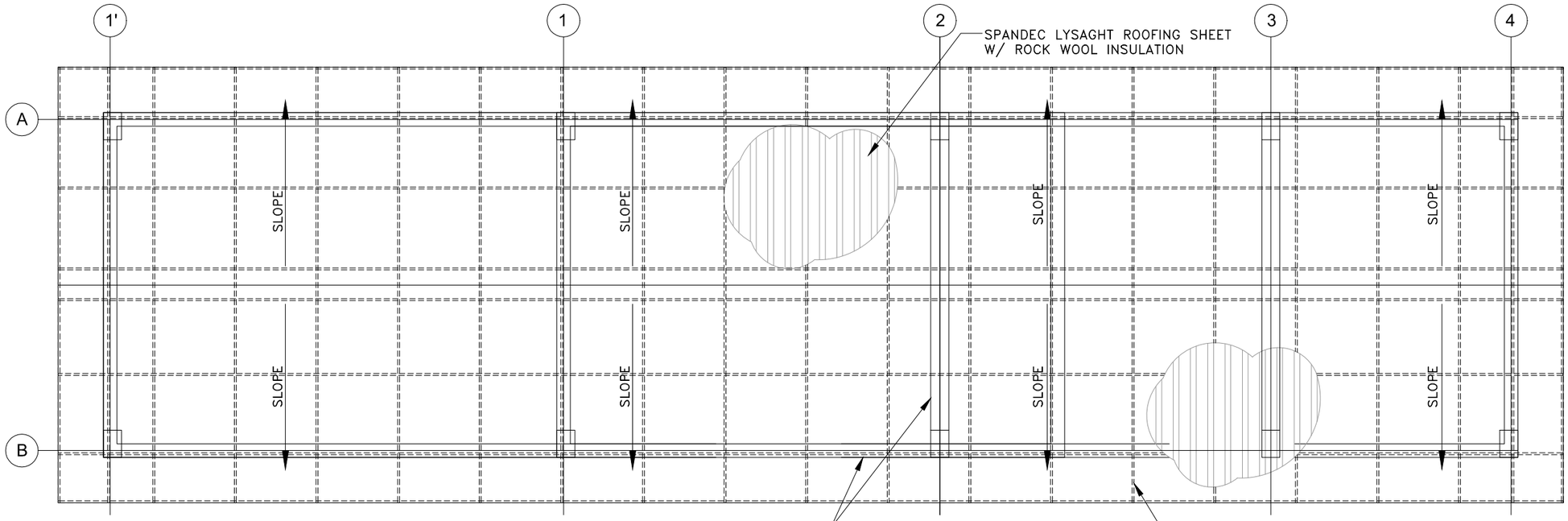

ROOF PLAN

SCALE 1:100

NOTES:-

1. ALL DIMENSIONS SHOWN ARE IN MILLIMETERS (MM), UNLESS OTHERWISE SHOWN
2. ALL LEVELS SHOWN ARE IN METERS. ALL LEVELS SHOWN ARE FROM MEAN SEA LEVEL
3. THIS DRAWING TO BE READ IN CONJUNCTION WITH ALL OTHER RELEVANT DRAWINGS,GENERAL NOTES AND SPECIFICATIONS.

REFERENCE DRAWINGS

SL.No.	DRAWING No.	DESCRIPTION

REVISION

REV.	DATE	DESCRIPTION	DRAWN	CHKD.	APPRD.
..	..	..	..	..	..
..	..	..	.	..	..
..	..	..	..	..	..
0	08.12.'15	DETAILED DESIGN SUBMISSION	SR	MP	MA
0	22.10.'15	CONCEPT DESIGN SUBMISSION	SR	MP	MA

CLIENT

MINISTRY OF ENVIRONMENT & ENERGY
REPUBLIC OF MALDIVES

CONSULTANT:

دار الحبشي للاستشارات الهندسية
Al Habshi Consultants Office

PROJECT:

Consultancy Services for Survey, Design of Water supply Facilities in Tha.Vilifushi, F.Nilandhoo, B.Eydhafushi and Adh. Hanyaameedhoo, Maldives

DRAWING TITLE:

RO PLANT ADMIN BUILDING
FLOOR AND ROOF PLAN

DESIGNED	DRAWN	CHECKED	APPROVED	SCALE	DATE
SK	SR	MP	MA	1 : 50	08.12.'15

PROJECT No.	SHEET No.	DRAWING No.
K-627	1 OF 1	BE-WS-113
REV. No.	0	

Copyright © 2016 by Al-Habshi Consultants Office

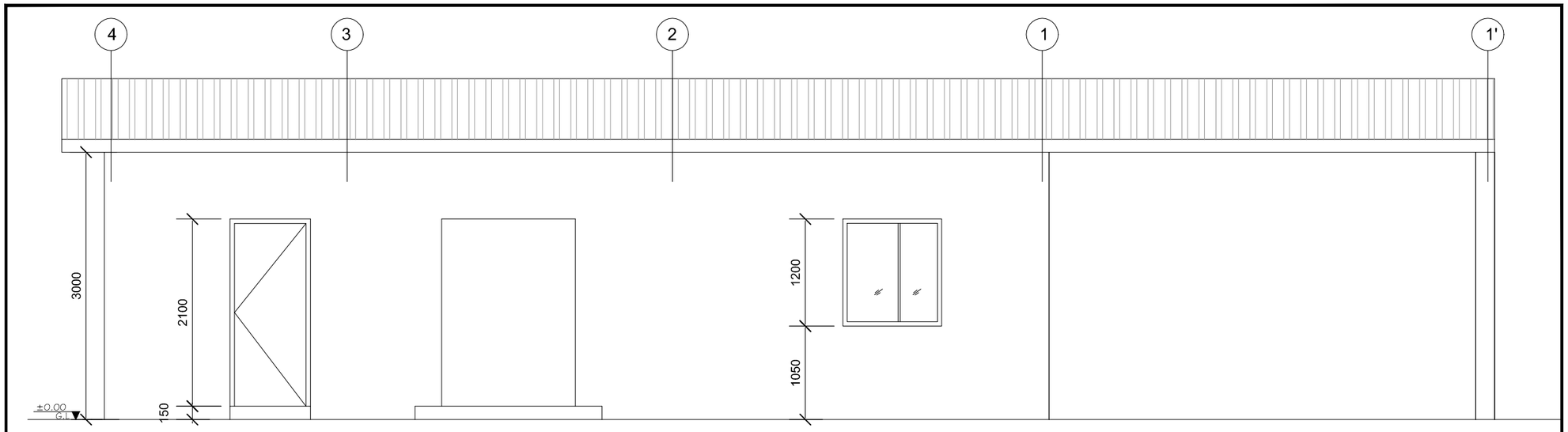

ELEVATION - 1

SCALE 1:100

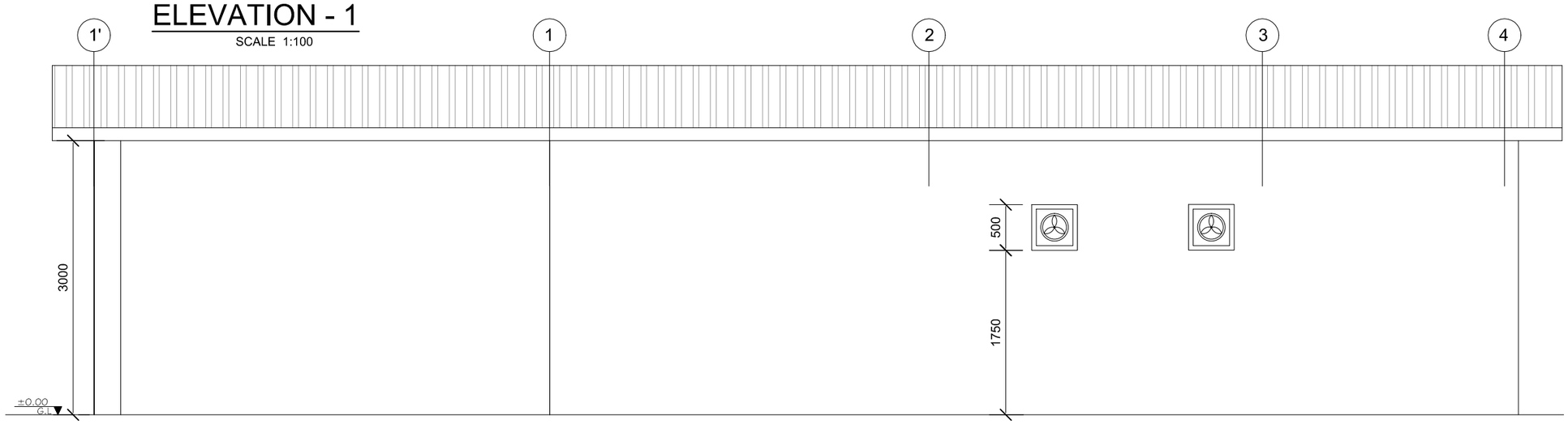

ELEVATION - 2

SCALE 1:100

RC STIFFENER COLUMN

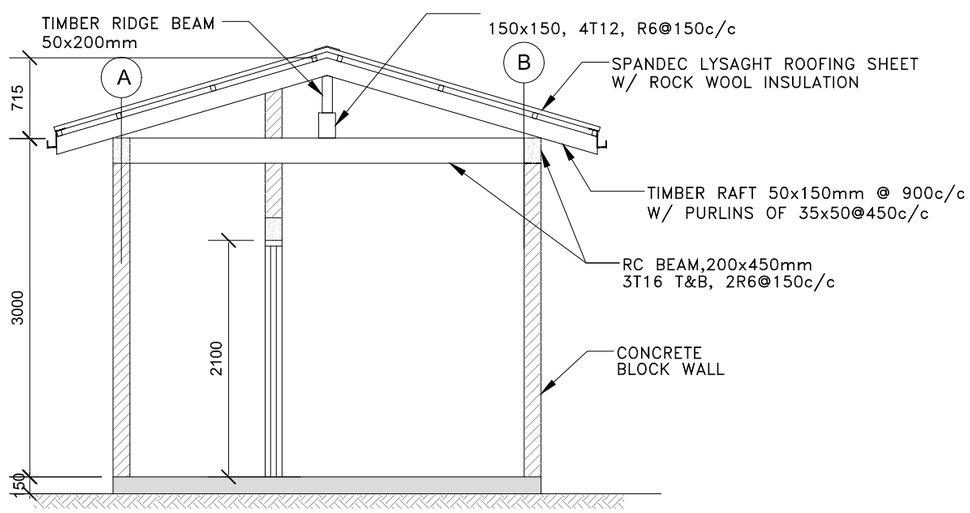

SECTION A-A

NOTES:-

1. ALL DIMENSIONS SHOWN ARE IN MILLIMETERS (MM), UNLESS OTHERWISE SHOWN
2. ALL LEVELS SHOWN ARE IN METERS. ALL LEVELS SHOWN ARE FROM MEAN SEA LEVEL
3. THIS DRAWING TO BE READ IN CONJUNCTION WITH ALL OTHER RELEVANT DRAWINGS,GENERAL NOTES AND SPECIFICATIONS.

REFERENCE DRAWINGS

SL.No.	DRAWING No.	DESCRIPTION

REVISION

REV.	DATE	DESCRIPTION	DRAWN	CHKD.	APPRD.
..	..	..	..	..	..
..	..	..	.	..	..
..	..	..	..	..	..
0	08.12.'15	DETAILED DESIGN SUBMISSION	SR	MP	MA
0	22.10.'15	CONCEPT DESIGN SUBMISSION	SR	MP	MA

CLIENT

MINISTRY OF ENVIRONMENT & ENERGY
REPUBLIC OF MALDIVES

CONSULTANT:

دار الحبشي للاستشارات الهندسية
Al Habshi Consultants Office

PROJECT:
Consultancy Services for Survey, Design of Water supply Facilities in Tha.Vilifushi, F.Nilandhoo, B.Eydhafushi and Adh. Hanyaameedhoo, Maldives

DRAWING TITLE:
RO PLANT ADMIN BUILDING
ELEVATIONS AND SECTION

DESIGNED	DRAWN	CHECKED	APPROVED	SCALE	DATE
SK	SR	MP	MA	1 : 50	08.12.'15

PROJECT No.	SHEET No.	DRAWING No.
K-627	1 OF 1	BE-WS-114
REV. No.	0	

Copyright © 2016 by Al-Habshi Consultants Office

DOOR & WINDOW SCHEDULE

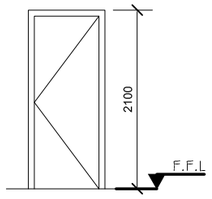

ELEVATION

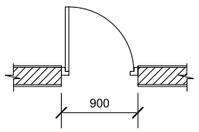

PLAN

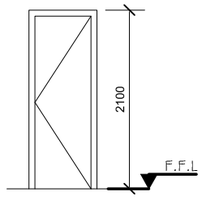

ELEVATION

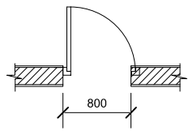

PLAN

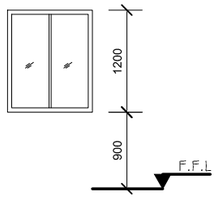

ELEVATION

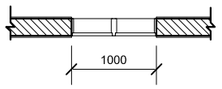

PLAN

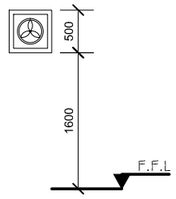

ELEVATION

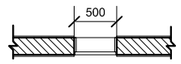

PLAN

	WIDTH	HEIGHT	DESCRIPTION
D1	900	2100	WOODEN FRAME & WOODEN PANEL

	WIDTH	HEIGHT	DESCRIPTION
D2	800	2100	WOODEN FRAME & WOODEN PANEL

	WIDTH	HEIGHT	SILL HEIGHT	DESCRIPTION
W1	1000	1200	900	ALUMINIUM FRAME WITH DOUBLE GLAZED

	WIDTH	HEIGHT	SILL HEIGHT	DESCRIPTION
W2	500	500	1600	ALUMINIUM FRAME WITH GLASS & FAN

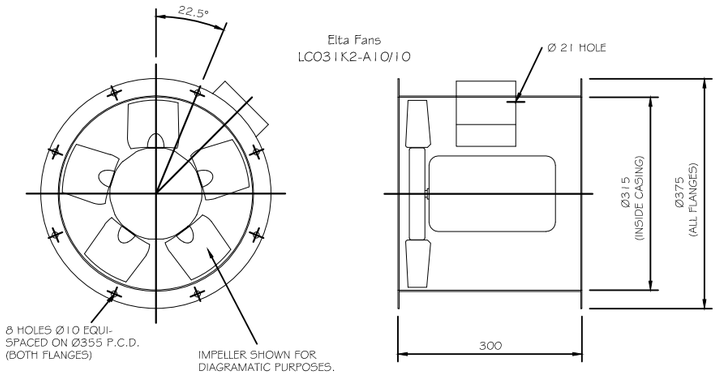

TYP.EXHAUST FAN

FANS SCHEDULE

REFERENCE	LOCATION	SERVICE	FLOW RATE	SP	POWER				FAN SPEED	FAN	REMARKS
	AREA	AREA	CFM	IWG	KW	VOLTS	PH	HZ	RPM	FAN TYPE	
EXF-1	LABORATORY	LABORATORY	120	0.5	0.25	230	1	50	1450	AXIAL	
EXF-2	TOILET	TOILET	60	0.5	0.25	230	1	50	1450	AXIAL	

1. CONTRACTOR SHALL RECALCULATE ALL EXTERNAL STATIC PRESSURES AND PROVIDE THE ADEQUATE MOTOR .
2. Stop EF at night time

EXHAUST FAN SCHEDULE

NOTES:-

1. ALL DIMENSIONS SHOWN ARE IN MILLIMETERS (MM), UNLESS OTHERWISE SHOWN
2. ALL LEVELS SHOWN ARE IN METERS. ALL LEVELS SHOWN ARE FROM MEAN SEA LEVEL
3. THIS DRAWING TO BE READ IN CONJUNCTION WITH ALL OTHER RELEVANT DRAWINGS,GENERAL NOTES AND SPECIFICATIONS.

REFERENCE DRAWINGS

SL.No	DRAWING No.	DESCRIPTION

REV.	DATE	DESCRIPTION	DRAWN	CHKD.	APPRD.
..	..	..	..	..	..
..	..	..	.	..	..
..	..	..	..	..	..
0	08.12.'15	DETAILED DESIGN SUBMISSION	SR	MP	MA
0	22.10.'15	CONCEPT DESIGN SUBMISSION	SR	MP	MA

REVISION

CLIENT
MINISTRY OF ENVIRONMENT & ENERGY
REPUBLIC OF MALDIVES

CONSULTANT:
ACO دار الحبشي للاستشارات الهندسية
Al Habshi Consultants Office

PROJECT:
Consultancy Services for Survey, Design of Water supply Facilities in Tha.Vilifushi, F.Nilandhoo, B.Eydhafushi and Adh. Hanyaameedhoo, Maldives

DRAWING TITLE:
RO PLANT ADMIN BUILDING
DOOR,WINDOW & EXHAUST FAN DETAILS

DESIGNED	DRAWN	CHECKED	APPROVED	SCALE	DATE
SK	SR	MP	MA	1 : 50	08.12.'15

PROJECT No.	SHEET No.	DRAWING No.
K-627	1 OF 1	BE-WS-115
REV. No.	0	

Copyright © 2016 by Al-Habshi Consultants Office

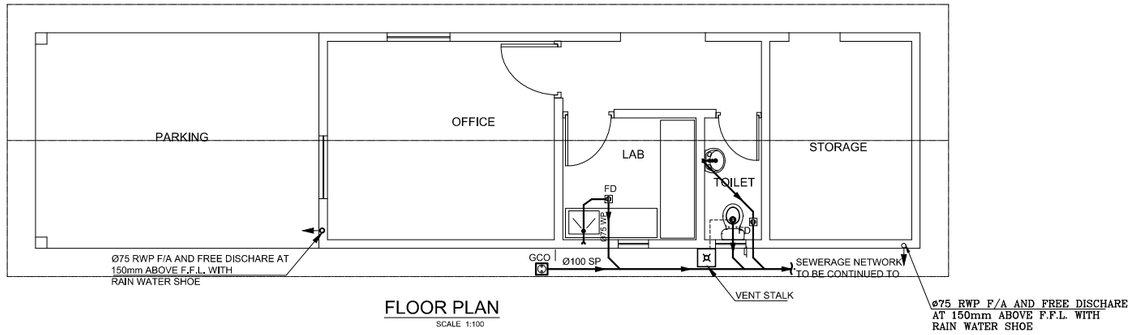

FLOOR PLAN

SCALE 1:100

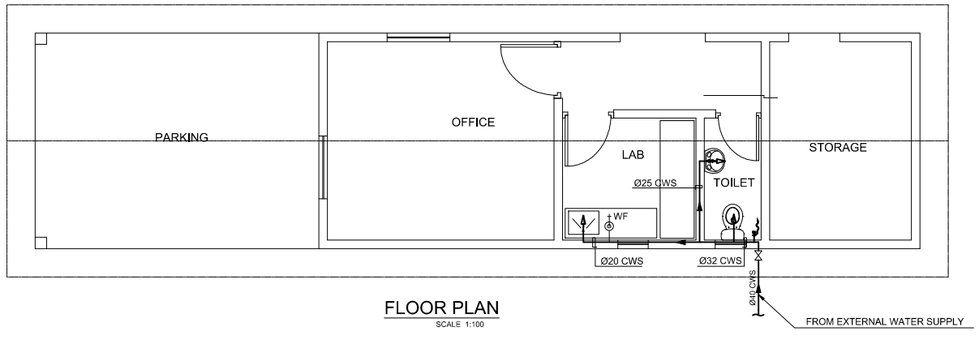

FLOOR PLAN

SCALE 1:100

0 1 2 3 4 M

NOTES:-

1. ALL DIMENSIONS SHOWN ARE IN MILLIMETERS (MM), UNLESS OTHERWISE SHOWN
2. ALL LEVELS SHOWN ARE IN METERS. ALL LEVELS SHOWN ARE FROM MEAN SEA LEVEL
3. THIS DRAWING TO BE READ IN CONJUNCTION WITH ALL OTHER RELEVANT DRAWINGS,GENERAL NOTES AND SPECIFICATIONS.

Legend :

	DRAINAGE PIPE (BELOW GRADE)
	DRAINAGE PIPE (ABOVE GRADE)
	RAIN WATER PIPE
	VENTILATION PIPE
FD	FLOOR DRAIN
GCO	GROUND CLEAN OUT
	DIRECTION OF FLOW
CWS	COLD WATER SUPPLY
GV	GATE VALVE
	WATER CLOSET
	WASH BASIN
	KITCHEN SINK

Abbreviations :

WP	WASTE PIPE
VP	VENT PIPE
RWP	RAIN WATER PIPE
L/L	LOW LEVEL
H/L	HIGH LEVEL
F/A	FROM ABOVE
F/B	FROM BELOW
T/A	TO ABOVE
T/B	TO BELOW
B/G	BELOW GRADE
B/S	BELOW SLAB

REFERENCE DRAWINGS

SL.No.	DRAWING No.	DESCRIPTION

REVISION

REV.	DATE	DESCRIPTION	DRAWN	CHKD.	APPRD.
..	..	..	..	..	..
..	..	..	.	..	..
..	..	..	..	..	..
0	08.12.'15	DETAILED DESIGN SUBMISSION	SR	MP	MA
0	22.10.'15	CONCEPT DESIGN SUBMISSION	SR	MP	MA

CLIENT

MINISTRY OF ENVIRONMENT & ENERGY
REPUBLIC OF MALDIVES

CONSULTANT:

دار الحبشي للاستشارات الهندسية
Al Habshi Consultants Office
+965 2246 8008 | +965 2246 8118 +965 2246 1135
admin@alhabshikuwait P.O. Box 27 SA, Safat 13132, Kuwait

PROJECT:
Consultancy Services for Survey, Design of Water supply Facilities in Tha.Vilifushi, F.Nilandhoo, B.Eydhafushi and Adh. Hanyaameedhoo, Maldives

DRAWING TITLE:
RO PLANT ADMIN BUILDING
SEWERAGE AND WATER SUPPLY LAYOUT

DESIGNED	DRAWN	CHECKED	APPROVED	SCALE	DATE
SK	SR	MP	MA	1 : 50	08.12.'15

PROJECT No.	SHEET No.	DRAWING No.
K-627	1 OF 1	BE-WS-116
REV. No.	0	

Copyright © 2016 by Al-Habshi Consultants Office

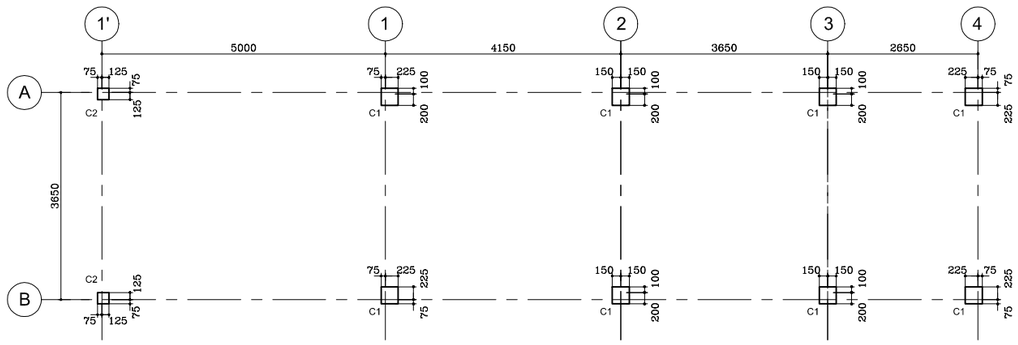

COLUMN & AXIS LAYOUT

SCALE 1 :100

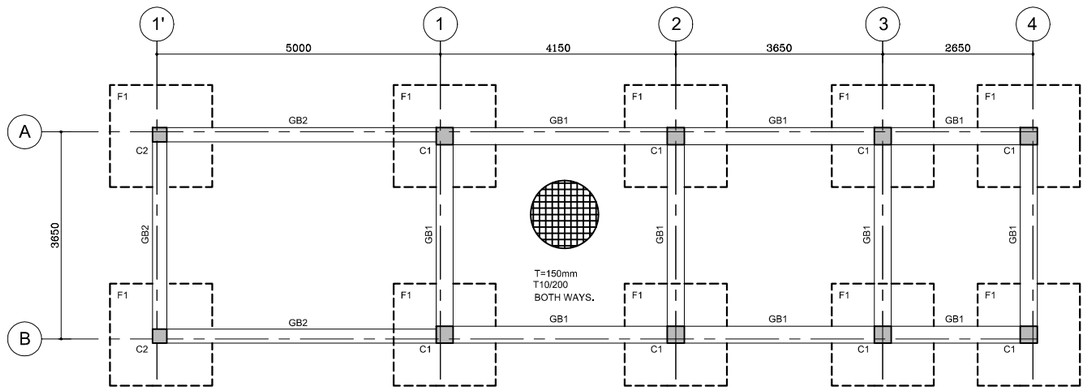

FOOTING & GRADE BEAM LAYOUT

SCALE 1 : 100

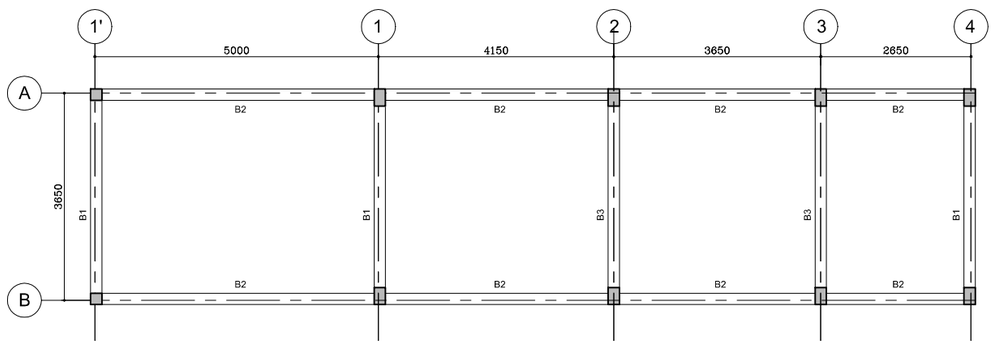

ROOF BEAM LAYOUT

SCALE 1 : 100

COLUMNS REINFORCEMENT DETAILS							
TYPE	FOUND			GROUND FLOOR			STIRRUPS
	SIZE		REINT.	SIZE		REINT.	
C1	300	300	12T16	200	300	10T16	T8/125 c/c
C2	250	250	8T16	200	200	4T16	T8/125 c/c

FOOTING REINFORCEMENT DETAILS						
MARK	DIMENSION			REINFORCEMENT	BOXED	REMARKS
	L	W	H			
F1	1800	1800	400	T12@100 c/c B/W, T&B		

GRADE BEAM REINFORCEMENT DETAILS							
MARK	SIZE		BOTTOM BARS	TOP BARS	STIRRUPS	SIDE BARS	REMARKS
	b	h					
GB1	300	300	4T16	3T16	T6/125 c/c		
GB2	250	300	4T16	3T16	T6/125 c/c		

BEAM REINFORCEMENT DETAILS							
MARK	SIZE		BOTTOM BARS	TOP BARS	STIRRUPS	SIDE BARS	REMARKS
	b	h					
B1	200	500	5T16	3T16	T6/125 c/c		
B2	200	500	4T16	3T16	T6/125 c/c		
B3	200	500	5T16	3T16	T6/100 c/c		

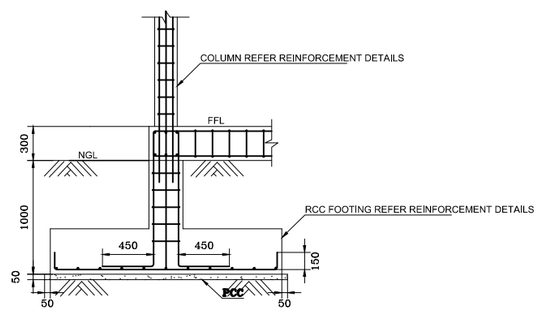

FOOTING DETAIL

SCALE 1 : 25

0 1 2 3 4 M

NOTES:-

1. ALL DIMENSIONS SHOWN ARE IN MILLIMETERS (MM), UNLESS OTHERWISE SHOWN
2. ALL LEVELS SHOWN ARE IN METERS. ALL LEVELS SHOWN ARE FROM MEAN SEA LEVEL
3. THIS DRAWING TO BE READ IN CONJUNCTION WITH ALL OTHER RELEVANT DRAWINGS,GENERAL NOTES AND SPECIFICATIONS.
3. CONTRACTOR SHALL CONDUCT INDEPENDENT GEOTECHNICAL INVESTIGATION TO CONFORM THE BEARING CAPACITY OF SOIL 150 KN / M²
4. THE CONCRETE COVER TO ALL REINFORCEMENT SHALL BE AS FOLLOW :-
   COLUMN / BEAM = 40 mm
   SLAB = 30 mm
   FOUNDATION = 50 mm
5. WATER CEMENT RATIO SHALL BE 0.50
6. FOR ALL GENERAL NOTES REFER BY DWG UT-GN-01
7. GRADE OF CONCRETE IS M30 AND GRADE OF STEEL IS Fy 460

LEGEND:-

1. NGL - NATURAL GROUND LEVEL
2. FFL - FINISHED FLOOR LEVEL
3. PCC - PLAIN CEMENT CONCRETE

REFERENCE DRAWINGS

SL.No.	DRAWING No.	DESCRIPTION

REV.	DATE	DESCRIPTION	DRAWN	CHKD.	APPRD.
..	..	..	..	..	..
..	..	..	.	..	..
..	..	..	..	..	..
0	08.12.'15	DETAILED DESIGN SUBMISSION	SR	MP	MA
0	22.10.'15	CONCEPT DESIGN SUBMISSION	SR	MP	MA

REVISION

CLIENT
MINISTRY OF ENVIRONMENT & ENERGY
REPUBLIC OF MALDIVES

CONSULTANT:
دار الحبشي للاستشارات الهندسية
Al Habshi Consultants Office

PROJECT:
Consultancy Services for Survey, Design of Water supply Facilities in Tha.Vilifushi, F.Nilandhoo, B.Eydhafushi and Adh. Hanyaameedhoo, Maldives

DRAWING TITLE:
RO PLANT ADMIN BUILDING
STRUCTURAL DRAWINGS

DESIGNED	DRAWN	CHECKED	APPROVED	SCALE	DATE
SK	SR	MP	MA	1 : 50	08.12.'15

PROJECT No.	SHEET No.	DRAWING No.
K-627	1 OF 1	BE-WS-117
REV. No.	0	

Copyright © 2016 by Al-Habshi Consultants Office

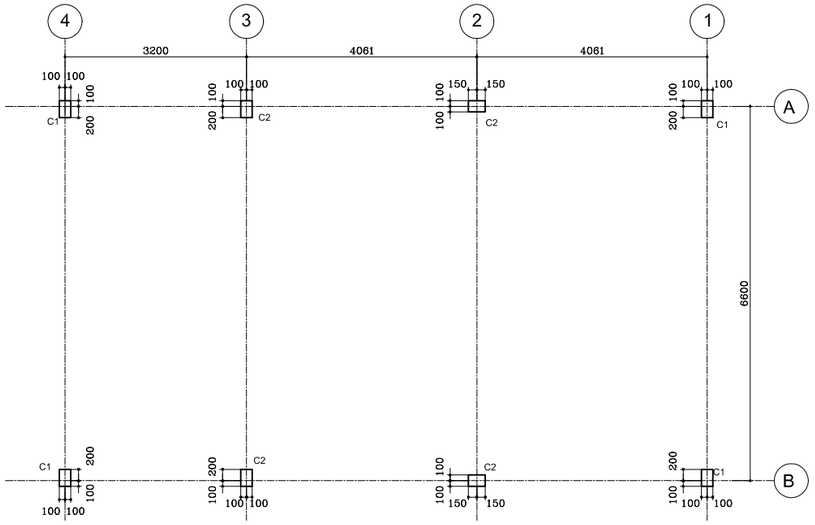

COLUMN & AXIS LAYOUT

SCALE 1 : 100

COLUMNS REINFORCEMENT DETAILS							
TYPE	FOUND			GROUND FLOOR			STIRRUPS
	SIZE		REINT.	SIZE		REINT.	
C1	200	300	6Y16	200	200	4Y16	Y8/200
C2	200	300	8Y16	200	300	8Y16	Y8/200

FOOTING REINFORCEMENT DETAILS							
MARK	DIMENSION			REINFORCEMENT		BOXED	REMARKS
	L	W	H	WIDTH	LENGTH		
F1	1800	1800	300	5Y16/m	5Y16/m		
F2	2500	2500	400	8Y16/m	8Y16/m		

GRADE BEAM REINFORCEMENT DETAILS							
MARK	SIZE		BOTTOM BARS	TOP BARS	STIRRUPS	SIDE BARS	REMARKS
	b	h					
GB1	300	300	3Y16	3Y16	Y8/200		

BEAM REINFORCEMENT DETAILS							
MARK	SIZE		BOTTOM BARS	TOP BARS	STIRRUPS	SIDE BARS	REMARKS
	b	h					
B1	200	500	3Y16 + 2Y16	2Y16	Y8/150		
B2	200	400	3Y16	3Y16	Y8/150		
B3	200	400	5Y16	3Y16	Y8/150		

SLABS REINFORCEMENT DETAILS				
MARK	THICK	REINFORCEMENT		REMARKS
		WIDTH	LENGTH	
S1	150	Y10/150	Y10/150	

1. ALL DIMENSIONS ARE IN MILLIMETERS (MM).
2. ALL LEVELS SHOWN ARE IN METERS.
3. THIS DRAWING TO BE READ IN CONJUNCTION WITH ALL OTHER RELEVANT DRAWINGS,GENERAL NOTES AND SPECIFICATIONS.
4. CONTRACTOR SHALL CONDUCT INDEPENDENT GEOTECHNICAL INVESTIGATION TO CONFORM THE BEARING CAPACITY OF SOIL 65 KN / M AT 1M DEPTH AS DESIGNED IS APPROPRIATE SHOULD THERE BE A VARIANCE CONTRACTOR SHALL REVISE THE DESIGN TO CONSTRUCT THE WORK
5. THE CONCRETE COVER TO ALL REINFORCEMENT SHALL BE AS FOLLOW :-
   COLUMN / BEAM = 40 mm
   SLAB = 30 mm
   FOUNDATION = 50 mm
6. WATER CEMENT RATIO SHALL BE 0.50
7. FOR ALL GENERAL NOTES REFER BY DWG UT-GN-01

LEGEND:-

1. NGL - NATURAL GROUND LEVEL
2. FFL - FINISHED FLOOR LEVEL
3. PCC - PLAIN CEMENT CONCRETE

ABBREVIATIONS:-

- GRID MARK (HORIZONTAL)

- GRID MARK (VERTICAL)

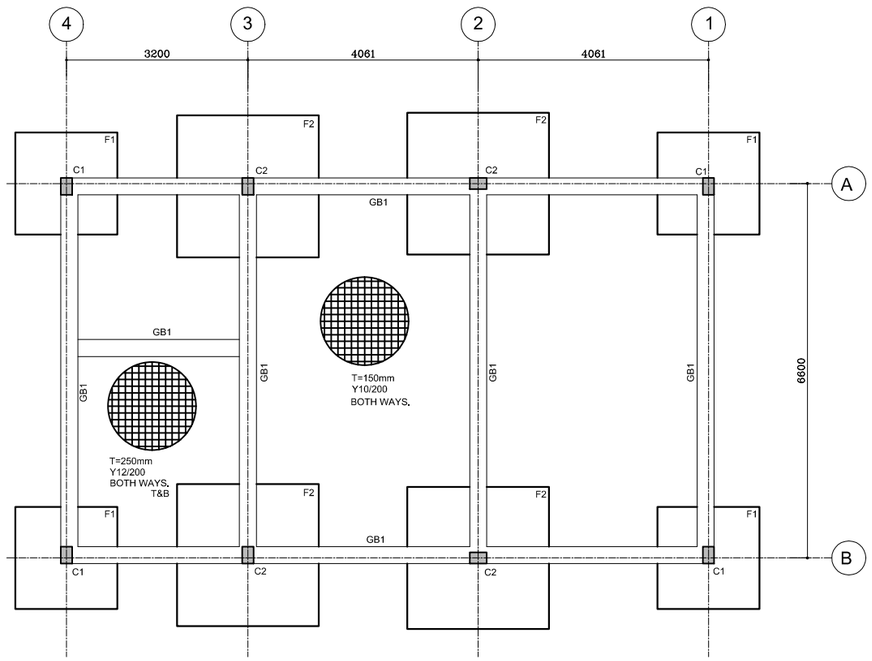

FOOTING & GRADE BEAM LAYOUT

SCALE 1 : 100

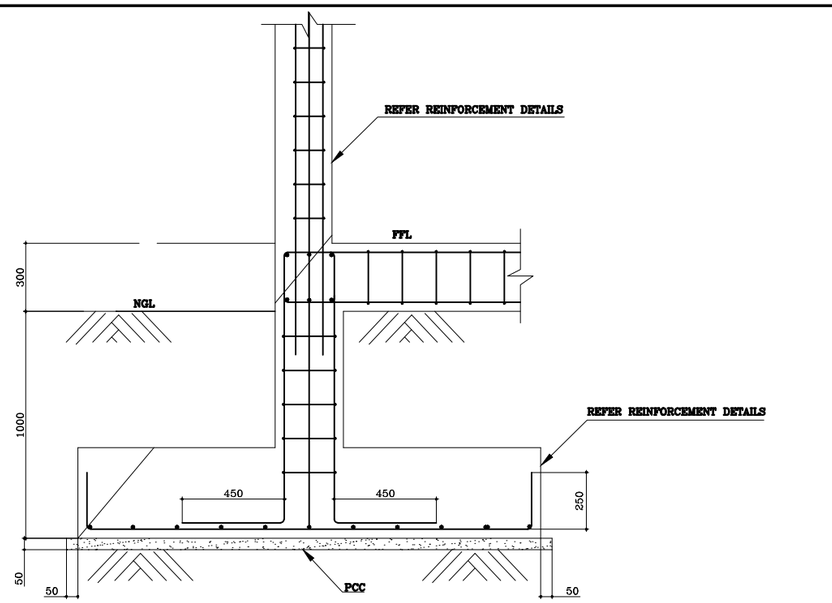

FOOTING DETAIL

SCALE 1 : 25

.5 0 .5 1 2 3 M

REFERENCE DRAWINGS

SL.No.	DRAWING No.	DESCRIPTION

REV.	DATE	DESCRIPTION	DRAWN	CHKD.	APPRD.
..	..	..	..	..	..
..	..	..	.	..	..
..	..	..	..	..	..
0	08.12.'15	DETAILED DESIGN SUBMISSION	SR	MP	MA
0	22.10.'15	CONCEPT DESIGN SUBMISSION	SR	MP	MA

REVISION

CLIENT

MINISTRY OF ENVIRONMENT & ENERGY
REPUBLIC OF MALDIVES

CONSULTANT:

دار الحبشي للاستشارات الهندسية
Al Habshi Consultants Office
+965 2246 0300 | +965 2246 9778 +965 2246 1120
admin@alhabshicon.com P.O. Box 21194, Safat 13082, Kuwait

PROJECT:
Consultancy Services for Survey, Design of Water supply Facilities in Tha.Vilifushi, F.Nilandhoo, B.Eydhafushi and Adh. Hanyaameedhoo, Maldives

DRAWING TITLE:
REVERSE OSMOSIS UNIT STRUCTURAL PLANS

DESIGNED	DRAWN	CHECKED	APPROVED	SCALE	DATE
SK	SR	MP	MA	1 : 50	08.12.'15

PROJECT No.	SHEET No.	DRAWING No.
K-627	1 OF 1	BE-WS-119
REV. No.	0	

Copyright © 2016 by Al-Habshi Consultants Office

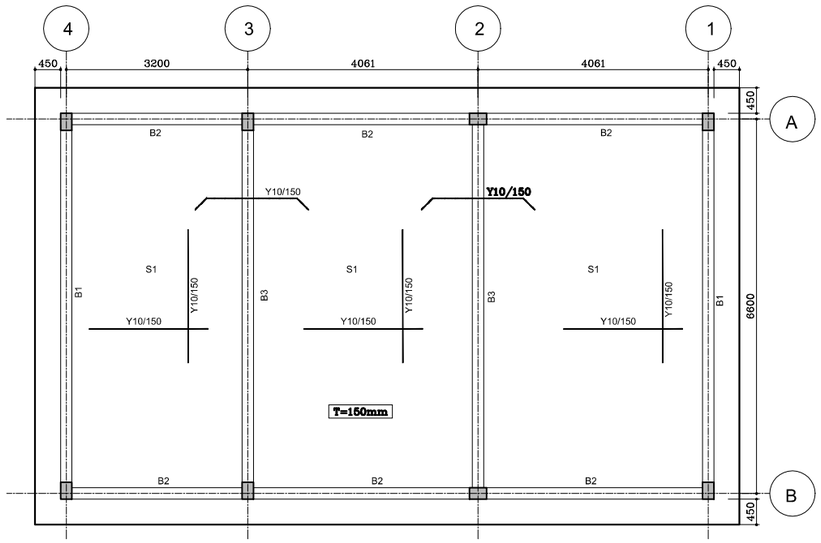

ROOF SLAB LAYOUT

SCALE 1 : 100

COLUMNS REINFORCEMENT DETAILS							
TYPE	FOUND			GROUND FLOOR			STIRRUPS
	SIZE		REINT.	SIZE		REINT.	
C1	200	300	6Y16	200	200	4Y16	Y8/200
C2	200	300	8Y16	200	300	8Y16	Y8/200

FOOTING REINFORCEMENT DETAILS							
MARK	DIMENSION			REINFORCEMENT		BOXED	REMARKS
	L	W	H	WIDTH	LENGTH		
F1	1800	1800	300	5Y16/m	5Y16/m		
F2	2500	2500	400	8Y16/m	8Y16/m		

GRADE BEAM REINFORCEMENT DETAILS							
MARK	SIZE		BOTTOM BARS	TOP BARS	STIRRUPS	SIDE BARS	REMARKS
	b	h					
GB1	300	300	3Y16	3Y16	Y8/200		

BEAM REINFORCEMENT DETAILS							
MARK	SIZE		BOTTOM BARS	TOP BARS	STIRRUPS	SIDE BARS	REMARKS
	b	h					
B1	200	500	3Y16 + 2Y16	2Y16	Y8/150		
B2	200	400	3Y16	3Y16	Y8/150		
B3	200	400	5Y16	3Y16	Y8/150		

SLABS REINFORCEMENT DETAILS				
MARK	THICK	REINFORCEMENT		REMARKS
		WIDTH	LENGTH	
S1	150	Y10/150	Y10/150	

.5 0 .5 1 2 3 M

1. ALL DIMENSIONS ARE IN MILLIMETERS (MM).
2. ALL LEVELS SHOWN ARE IN METERS.
3. THIS DRAWING TO BE READ IN CONJUNCTION WITH ALL OTHER RELEVANT DRAWINGS,GENERAL NOTES AND SPECIFICATIONS.
4. CONTRACTOR SHALL CONDUCT INDEPENDENT GEOTECHNICAL INVESTIGATION TO CONFORM THE BEARING CAPACITY OF SOIL 65 KN / M AT 1M DEPTH AS DESIGNED IS APPROPRIATE SHOULD THERE BE A VARIANCE CONTRACTOR SHALL REVISE THE DESIGN TO CONSTRUCT THE WORK
5. THE CONCRETE COVER TO ALL REINFORCEMENT SHALL BE AS FOLLOW :-
   COLUMN / BEAM = 40 mm
   SLAB = 30 mm
   FOUNDATION = 50 mm
6. WATER CEMENT RATIO SHALL BE 0.50
7. FOR ALL GENERAL NOTES REFER BY DWG UT-GN-01

LEGEND:-

1. NGL - NATURAL GROUND LEVEL
2. FFL - FINISHED FLOOR LEVEL
3. PCC - PLAIN CEMENT CONCRETE

ABBREVIATIONS:-

GRID No
GRID LINE
- GRID MARK (HORIZONTAL)

GRID No
GRID LINE
- GRID MARK (VERTICAL)

REFERENCE DRAWINGS

SL.No.	DRAWING No.	DESCRIPTION

REV.	DATE	DESCRIPTION	DRAWN	CHKD.	APPRD.
..	..	..	..	..	..
..	..	..	.	..	..
..	..	..	..	..	..
0	08.12.'15	DETAILED DESIGN SUBMISSION	SR	MP	MA
0	22.10.'15	CONCEPT DESIGN SUBMISSION	SR	MP	MA

REVISION

CLIENT
MINISTRY OF ENVIRONMENT & ENERGY
REPUBLIC OF MALDIVES

CONSULTANT:
دار الحبشي للاستشارات الهندسية
Al Habshi Consultants Office
+965 22640000 | +965 22640110 +965 22641105
admin@alhabshicons.com P.O. Box 27194, Safat 13132, Kuwait

PROJECT:
Consultancy Services for Survey, Design of Water supply Facilities in Tha.Vilifushi, F.Nilandhoo, B.Eydhafushi and Adh. Hanyaameedhoo, Maldives

DRAWING TITLE:
REVERSE OSMOSIS UNIT STRUCTURAL PLANS

DESIGNED	DRAWN	CHECKED	APPROVED	SCALE	DATE
SK	SR	MP	MA	1 : 50	08.12.'15

PROJECT No.	SHEET No.	DRAWING No.
K-627	1 OF 1	BE-WS-120
REV. No.	0	

Copyright © 2016 by Al-Habshi Consultants Office

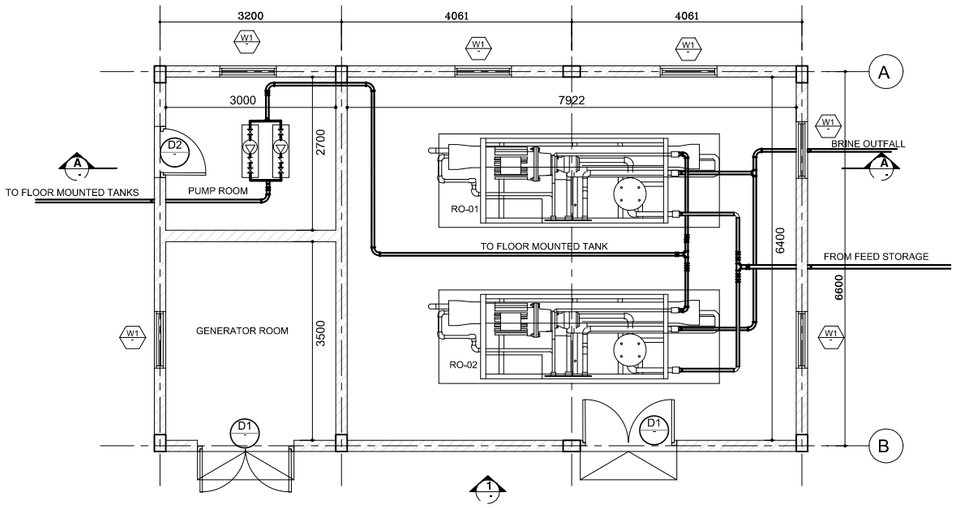

RO PLANT BUILDING

SCALE 1:100

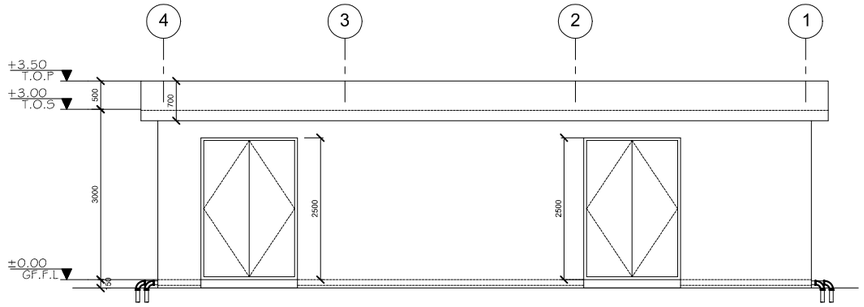

VIEW-1

SCALE 1:100

1. ALL DIMENSION ARE IN MILLIMETER (MM),UNLESS OTHERWISE NOTED
2. ALL LEVELS SHOWN ARE IN METERS.
3. THIS DRAWING TO BE READ IN CONJUNCTION WITH ALL OTHER RELEVANT DRAWINGS,GENERAL NOTES AND SPECIFICATIONS.

RO PLANT SCHEDULE FOR xxxxxxx ISLAND

NO.	PUMP CAPACITY	MOTOR	POWER SUPPLY	REMARKS
01	25.0M³ /HRS	35 KW(46.90 BHP)	400-415/3/50	TWO NOS OF RO PLANT WORKING ACCORDING TO FLOAT SENSOR

DOOR & LOUVER SCHEDULE

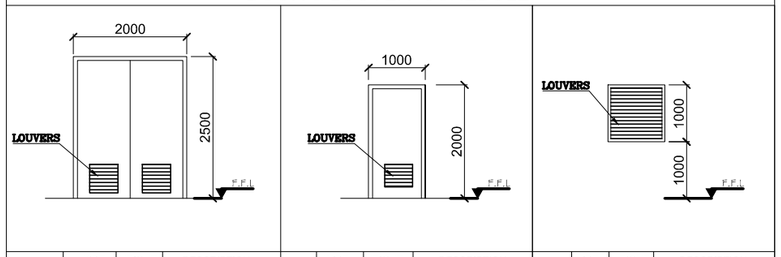

	WIDTH	HEIGHT	DESCRIPTION
D1	2000	2500	STEEL DOOR WITH LOUVERS
D2	1000	2000	STEEL DOOR WITH LOUVERS
W1	1000	1000	STEEL FRAME WITH LOUVERS

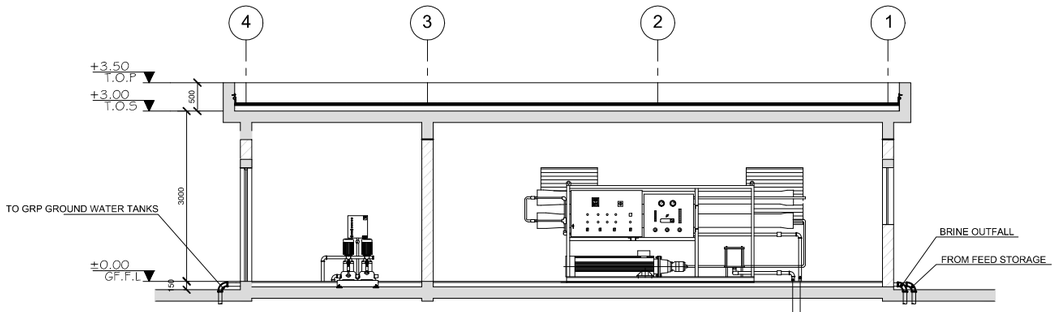

SECTION A-A

SCALE 1:100

0 1 2 3 4 M

REFERENCE DRAWINGS

SL.No.	DRAWING No.	DESCRIPTION

REV.	DATE	DESCRIPTION	DRAWN	CHKD.	APPRD.
..	..	..	..	..	..
..	..	..	.	..	..
..	..	..	..	..	..
0	08.12.'15	DETAILED DESIGN SUBMISSION	SR	MP	MA
0	22.10.'15	CONCEPT DESIGN SUBMISSION	SR	MP	MA

REVISION

CLIENT

MINISTRY OF ENVIRONMENT & ENERGY
REPUBLIC OF MALDIVES

CONSULTANT:

دار الحبشي للاستشارات الهندسية
Al Habshi Consultants Office
+965 2246 8300 | +965 2246 9178 +965 2246 1126
admin@alhabshiaco.com P.O. Box 21154, Safat 13122, Kuwait

PROJECT:

Consultancy Services for Survey, Design of Water supply Facilities in Tha.Vilifushi, F.Nilandhoo, B.Eydhafushi and Adh. Hanyaameedhoo, Maldives

DRAWING TITLE:

REVERSE OSMOSIS UNIT DETAILS

DESIGNED	DRAWN	CHECKED	APPROVED	SCALE	DATE
SK	SR	MP	MA	1 : 50	08.12.'15

PROJECT No.	SHEET No.	DRAWING No.
K-627	1 OF 1	BE-WS-121
REV. No.	0	

Copyright © 2016 by Al-Habshi Consultants Office

ELECTRICAL DRAWINGS

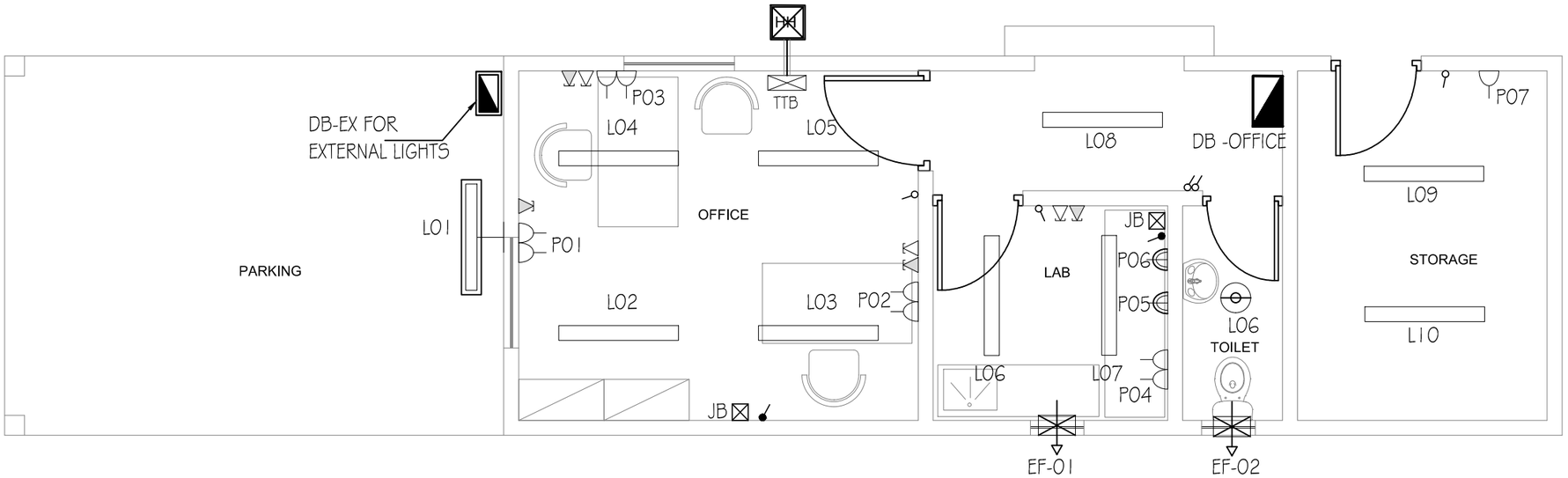

PLAN

SCALE 1:100

1. ALL DIMENSIONS ARE IN mm EXCEPT AND OTHERWISE SPECIFIED.
2. THIS DRAWING TO BE READ IN CONJUNCTION WITH ALL OTHER RELEVANT DRAWINGS AND SPECIFICATIONS.
3. ALL ABOVE GROUND CONDUIT SHALL BE RIGID HOT DIP GALVANIZED EXCEPT AS NOTED.
4. ALL NEMA 3R GASKETED S.S ENCLOSURES TO HAVE LOCKABLE HANDLE AND 3 POINT LATCHING.

LEGENDS

TYPE	SYMBOL	DESCRIPTION
B		1 x 40W SURFACE MOUNTED FLUORESCENT LIGHT FITING
C		1 x 40W WALL MOUNTED FLUORESCENT LIGHT FITING-WEATHERPROOF
E		1x60W SURFACE MOUNTED FLUORESCENT DOWN LIGHT - WEATHERPROOF
		5A SWITCHED SOCKET OUTLET (1.000W)
		5A SWITCHED SOCKET OUTLET AT HIGHT LEVEL-WEATHER PROOF (1.000W)
		13A TWIN SWITCHED SOCKET OUTLET
		JUNCTION BOX
		20A DP SWITCH
		EXHAUST FAN (80W)
	TTB	TELEPHONE TERMINAL BOX
		SINGLE OUTLET FOR DATA
		SINGLE OUTLET FOR VOICE
		0.6x0.6x0.6m HAND HOLE

REFERENCE DRAWINGS

SL.No	DRAWING No.	DESCRIPTION

REV.	DATE	DESCRIPTION	DRAWN	CHKD.	APPRD.
..	..	..	..	..	..
..	..	..	.	..	..
..	..	..	..	..	..
..	..	..	..	..	..
0	28-12-'15	DETAILED DESIGN SUBMISSION	BA	RDS	MA

REVISION

CLIENT

MINISTRY OF ENVIRONMENT & ENERGY
REPUBLIC OF MALDIVES

CONSULTANT:

دار الحبشي للاستشارات الهندسية
Al Habshi Consultants Office

PROJECT:

Consultancy Services for Survey, Design of Water supply Facilities in Tha.Vilifushi, F.Nilandhoo, B.Eydhafushi and Adh. Hanyaameedhoo, Maldives

DRAWING TITLE:

RO PLANT ADMIN BUILDING
ELECTRICAL LAYOUT
B.EYDHAFUSHI ISLAND

DESIGNED	DRAWN	CHECKED	APPROVED	SCALE	DATE
RDS	BA	RDS	MA	1 : 50	28-12-'15

PROJECT No.	SHEET No.	DRAWING No.
K-627	1 OF 1	BE-EL-100
REV. No.	0	

Copyright © 2015 by Al-Habshi Consultants Office

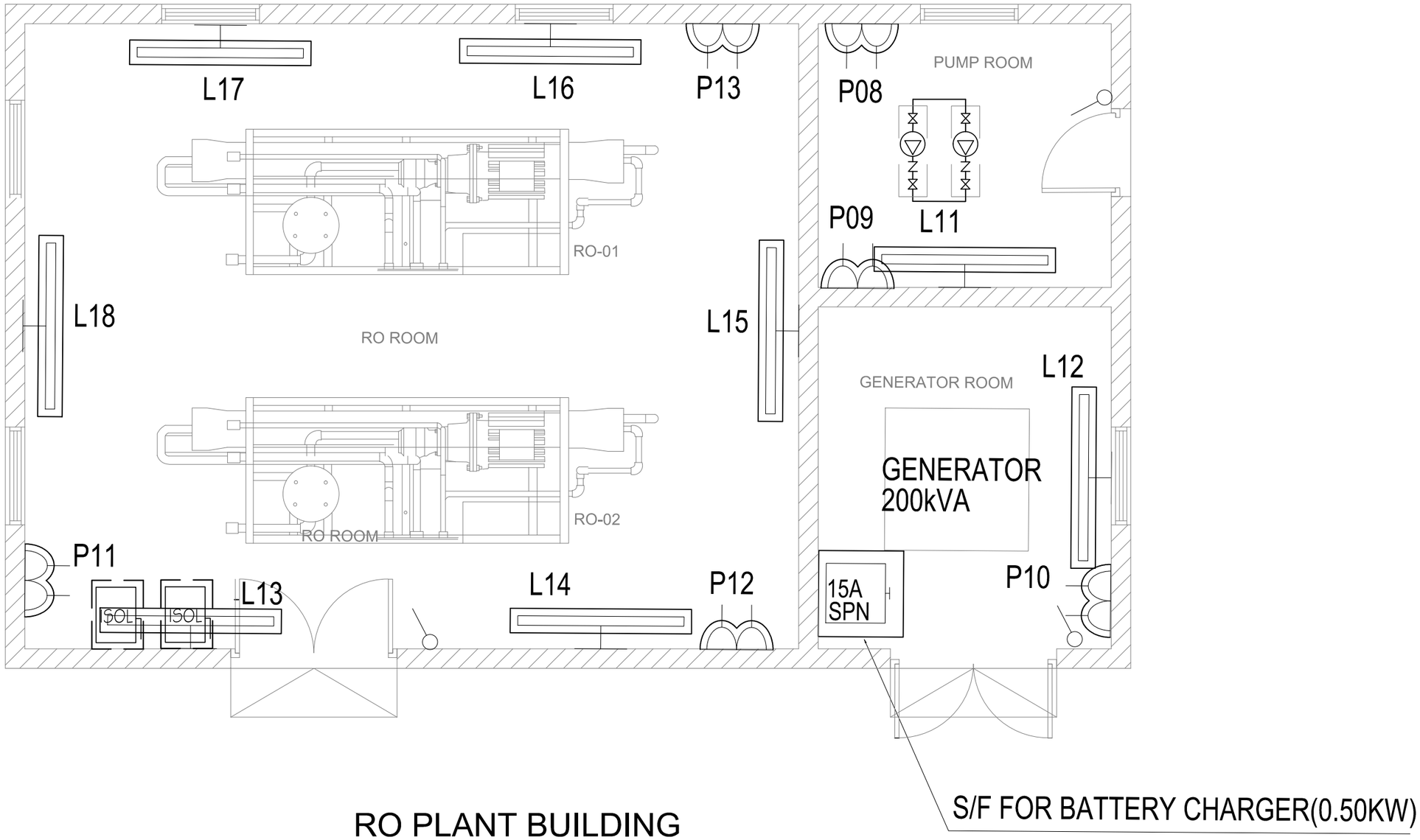

RO PLANT BUILDING

SCALE 1:100

NOTES

1. ALL DIMENSIONS ARE IN mm EXCEPT AND OTHERWISE SPECIFIED.
2. THIS DRAWING TO BE READ IN CONJUNCTION WITH ALL OTHER RELEVANT DRAWINGS AND SPECIFICATIONS.
3. ALL ABOVE GROUND CONDUIT SHALL BE RIGID HOT DIP GALVANIZED EXCEPT AS NOTED.
4. ALL NEMA 3R GASKETED S.S ENCLOSURES TO HAVE LOCKABLE HANDLE AND 3 POINT LATCHING.

LEGENDS

TYPE	SYMBOL	DESCRIPTION
C		1 x 40W WALL MOUNTED FLUORESCENT
	15A SPN	SWITCH FUSE - WEATHERPROOF
	ISOL	ISOLATOR FOR TUBE WELL PUMP ON / OFF
		13A TWIN SWITCHED SOCKET OUTLET - WEATHERPROOF

REFERENCE DRAWINGS

SL.No	DRAWING No.	DESCRIPTION

REV.	DATE	DESCRIPTION	DRAWN	CHKD.	APPRD.
..	..	..	..	..	..
..	..	..	.	..	..
..	..	..	..	..	..
..	..	..	..	..	..
0	28-12-'15	DETAILED DESIGN SUBMISSION	BA	RDS	MA

REVISION

CLIENT

MINISTRY OF ENVIRONMENT & ENERGY
REPUBLIC OF MALDIVES

CONSULTANT:

ACO | دار الحبشي للاستشارات الهندسية
Al Habshi Consultants Office

PROJECT:
Consultancy Services for Survey, Design of Water supply Facilities in Tha.Vilifushi, F.Nilandhoo, B.Eydhafushi and Adh. Hanyaameedhoo, Maldives

DRAWING TITLE:
RO PLANT BUILDING
ELECTRICAL LAYOUT
B.EYDHAFUSHI ISLAND

DESIGNED	DRAWN	CHECKED	APPROVED	SCALE	DATE
RDS	BA	RDS	MA	1 : 50	28-12-'15

PROJECT No.	SHEET No.	DRAWING No.
K-627	1 OF 1	BE-EL-101
REV. No.	0	

Copyright © 2015 by Al-Habshi Consultants Office

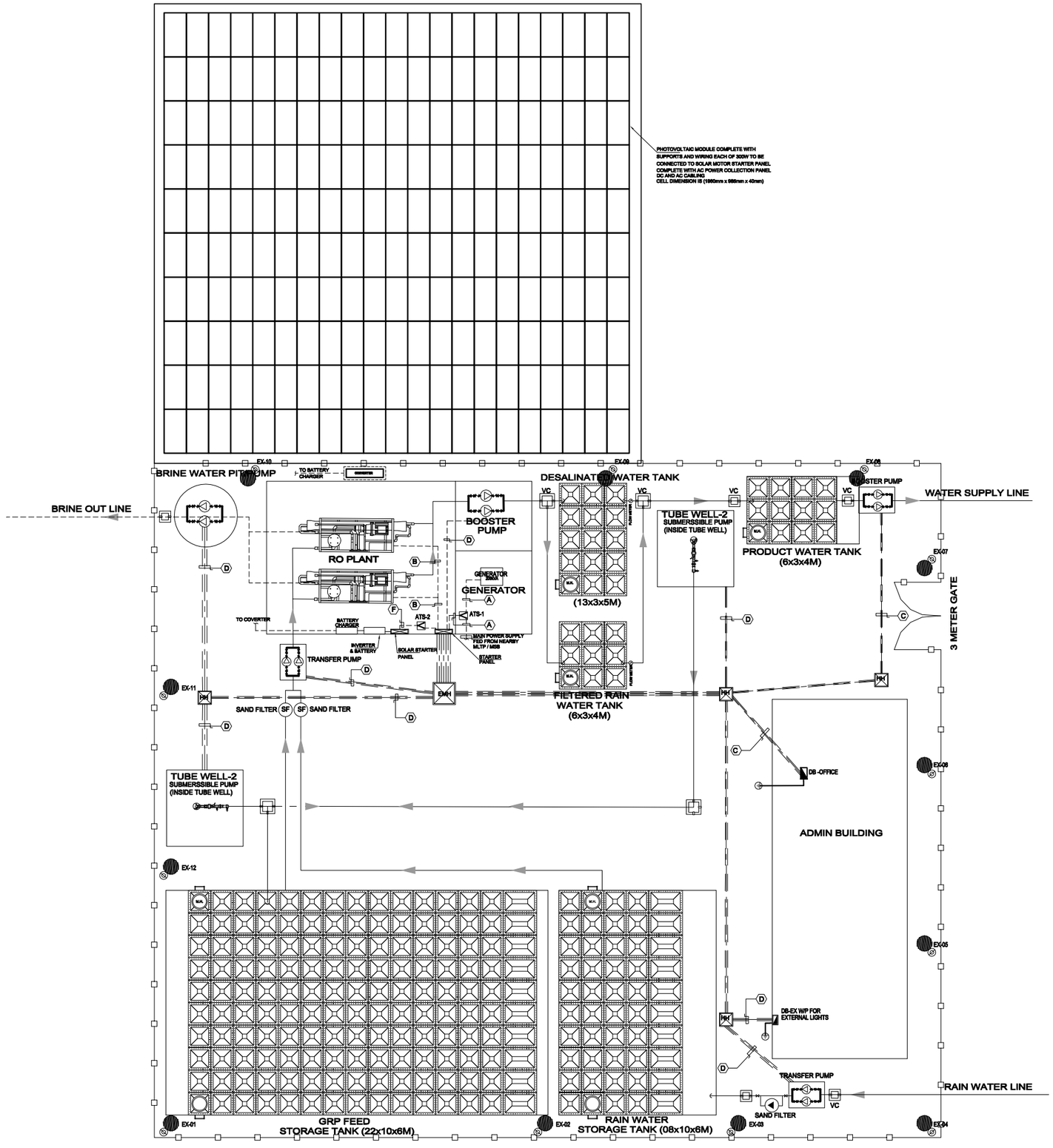

LEGENDS:-

1	TUBE WELL WITH SUBMERSIBLE PUMP $19m^3$/hour AT 62m HEAD
2	ADMIN.OFFICE INCLUDING ALL ELECTRO-MECHANICAL FACILITIES
3	GRP FEED STORAGE TANK
4	RO UNITS
5	GENERATOR ROOM
6	FLOOR MOUNTED GRP STORAGE TANK
7	TRANSFER PUMP (2 Sets.) $6m^3$/hour AT 20m HEAD
8	OVERHEAD GRP TANK
9	BRINE STORAGE WITH 2 Nos. PUMP $16.8m^3$/hour, BOTH WORKING

CABLE LEGEND:-

A	2x4c 240mmSQ cu/XLPE/SWA/PVC ON CABLE TRAY
B	4c 120mmSQ cu/XLPE/SWA/PVC ON CABLE TRAY
C	(4x25.0+1x10.0)mmSQ cu./PVC IN 50mmØ PVC DUCT
D	(4x16.0+1x6.0) cu./ PVC IN 50mmØ PVC DUCT
E	(4x10.0+1x6.0)mmSQ cu./PVC IN PVC DUCT

TYPES	SYMBOL	DESCRIPTION
G		W/P 70W HP SODIUM VAPOUR LAMP POST MOUNTED (6mts HT.)
		DISTRIBUTION BOARD
		DISTRIBUTION BOARD/WEATHER PROOF
		STARTER PANEL
	EMH	1.0x1.0x1.0m MANHOLE
	HH	0.6x0.6x0.6m HANDHOLE

REFERENCE DRAWINGS

SL.No	DRAWING No.	DESCRIPTION

REV.	DATE	DESCRIPTION	DRAWN	CHKD.	APPRD.
..	..	..	..	..	..
..	..	..	.	..	..
..	..	..	..	..	..
..	..	..	..	..	..
0	28-12-'15	DETAILED DESIGN SUBMISSION	BA	RDS	MA

REVISION

CLIENT

MINISTRY OF ENVIRONMENT & ENERGY
REPUBLIC OF MALDIVES

CONSULTANT:

Aco | دار الحبشي للاستشارات الهندسية
Al Habshi Consultants Office
+965 2246 8005 | +965 2246 8115 | +965 2244 1136
admin@alhabshiksa.com | P.O. Box 2710, SAFAT 13127, Kuwait

PROJECT:

DRAWING TITLE:

DESIGNED	DRAWN	CHECKED	APPROVED	SCALE	DATE
RDS	BA	RDS	MA	1 : 100	28-12-'15

PROJECT No.	SHEET No.	DRAWING No.
K-627	1 OF 1	BE-EL-102
REV. No.	0	

Copyright © 2015 by Al-Habshi Consultants Office

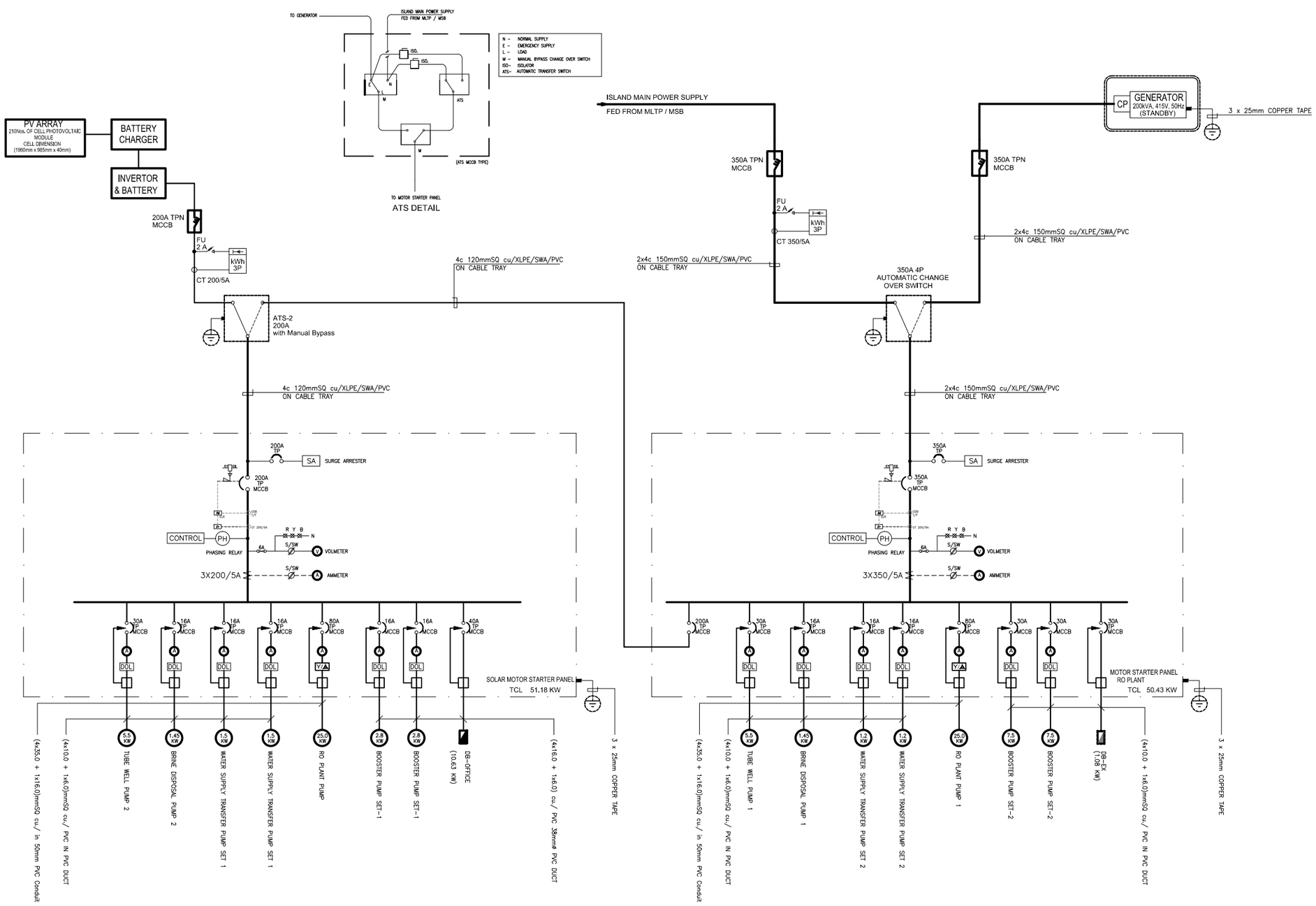

ELECTRICAL SINGLE LINE DIAGRAM
B.EYDHAFUSHI ISLAND

NOTES

1. ALL DIMENSIONS ARE IN MILLIMETERS EXCEPT AND OTHERWISE SPECIFIED.
2. CABLE LEGEND AS SHOWN AS DRAWING
3. ALL S/F,ELECTRICAL PANELS AND GENERATOR SHALL BE PROVIDED WITH EARTHING SYSTEM
4. ALL ELECTRICAL INSTALLATIONS FOR OUTDOOR USE, SHALL BE PROTECTED FROM RAIN AND DUST
5. ALL PUMPS SHOULD BE PROVIDED WITH OWN CONTROL PANEL WITH NECESSARY PROTECTION.
6. ALL EXPOSED INSTALLATION SHOULD BE IN G.I CONDUIT OR SHADED CABLE TRAYS.
7. ALL ABOVE GROUND CONDUIT SHALL BE RIGID HOT DIP GALVANIZED EXCEPT AS NOTED.
8. ALL NEMA 3R GASKETED S.S ENCLOSURES TO HAVE LOCKABLE HANDLE AND 3 POINT LATCHING.
9. CONTRACTOR IS RESPONSIBLE TO GET THE FINAL APPROVAL FOR THE ALL THE DETAILS REGARDING SOLAR SYSTEM FROM THE CONSULTANT ENGINEER BEFORE IMPLIMENTING ON THE SITE.

LEGEND	DESCRIPTION
MCCB	MOULDED CASE CIRCUIT BREAKER
MCB	MINIATURE CIRCUIT BREAKER
ELR	EARTH LEAKAGE RELAY
ELCB	EARTH LEAKAGE CIRCUIT BREAKER
A	AMMETER
V	VOLTMETER
PF	POWER FACTOR METER
	SELECTOR SWITCH
	PHASE INDICATOR
	MCB LOCKABLE ISOLATOR
DOL	DIRECT ON–LINE STARTER
SA	SURGE ARRESTOR
CP	CONTROL PANEL
	DISTRIBUTION BOARD
	DISTRIBUTION BOARD W/P
	STARTER PANEL WEATHERPROOF
	EARTH PIT
	EARTH LEAKAGE RELAY

REFERENCE DRAWINGS

SL.No	DRAWING No.	DESCRIPTION

REVISION

REV.	DATE	DESCRIPTION	DRAWN	CHKD.	APPRD.
..	..	..	..	..	..
..	..	..	.	..	..
..	..	..	..	..	..
..	..	..	..	..	..
0	28-12-15	DETAILED DESIGN SUBMISSION	BA	RDS	MA

CLIENT

MINISTRY OF ENVIRONMENT & ENERGY
REPUBLIC OF MALDIVES

CONSULTANT:

ACO دار الحبشي للاستشارات الهندسية
Al Habshi Consultants Office

PROJECT:
Consultancy Services for Survey, Design of Water supply Facilities in Tha.Vilifushi, F.Nilandhoo, B.Eydhafushi and Adh. Hanyaameedhoo, Maldives

DRAWING TITLE:
SCHEMATIC DIAGRAM FOR RO PLANT UNIT
B.EYDHAFUSHI ISLAND

DESIGNED	DRAWN	CHECKED	APPROVED	SCALE	DATE
RDS	BA	RDS	MA	1 : 50	28-12-15

PROJECT No.	SHEET No.	DRAWING No.
K-627	1 OF 1	BE-EL-103
REV. No.	0	

Copyright © 2015 by Al-Habshi Consultants Office

DB-OFFICE

LOCATION: OFFICE

MCB 10 WAYS TPN — 3 Nos. 63A HRC FUSES + ISOLATOR 100A TPN

LIGHT SECTION — C.O.E.L.C.B. 40A, 300mA 4 POLE

CR No	Phase	W.SIZE sq.mm	RATES AMP	LOCATION	TYPE OF LIGHT/POWER	NO. OF POINTS	CONTROLLED BY	R	Y	B
1	R	2.5	10	OFFICE BLDG.	LIGHT L02-L05	4(1x50)	SWITCH	**200**		
	Y	2.5	10	LAB	LIGHT L6-L7	2(1x50)+1(1X80)	SWITCH		**180**	
	B	2.5	10	TOILET/CORRIDOR	LIGHT L06,-L08	1(1x70)+1(1x50)+1 (1X80)	SWITCH			**200**
2	R	2.5	10	STORAGE	LIGHT L09-L10	2(1x50)	SWITCH	**100**		
	Y	2.5	10	OFFICE-CAR PARK	LIGHT L01	1(1x50)	SWITCH		**50**	
	B	-	10		SPARE					
3	R	2.5	15	RO PLANT BLDG.	LIGHT L13-L18	6(1x50)	SWITCH	**300**		
	Y	2.5	10		SPARE					
	B	-	10	RO PLANT BLDG.	LIGHT L11-L12	2(1x50)	SWITCH			**100**
POWER SECTION C.O.E.L.C.B 63A 30mA 4 POLE										
4	R	4.0	15	OFFICE	P01-P03	3(1x200)	SWITCHED	**600**		
	Y	4.0	15	OFFICE-LAB	P05	1(1x1000)	SWITCHED		**1000**	
	B	4.0	15	OFFICE-LAB	P06	1(1x1000)	SWITCHED			**1000**
5	R	4.0	15		SPARE					
	Y	4.0	15	OFFICE LAB	P04	1(1x200)	SWITCHED		**200**	
	B	4.0	15	OFFICE-STORAGE	P07	1(1x1000)	SWITCHED			**1000**
6	R	4.0	15		SPARE					
	Y	6.0	15		SPARE					
	B	6.0	15		SPARE					
7	R	6.0	20	OFFICE BLDG.	SU-01	1(1x2000)	JB+DP SWITCH	**2000**		
	Y	6.0	20	OFFICE BLDG.	SU-02	1(1x2000)	JB+DP SWITCH		**2000**	
	B	4.0	15		SPARE					
8	R	-	10		SPARE					
	Y	4.0	10	RO PLANT BLDG.	P11-P13	3(1x200)			**600**	
	B	4.0	10	RO PLANT BLDG.	P08-P09	3(1x200)				**600**
9	R	4.0	10		SPARE					
	Y	4.0	10		SPARE				-	
	B	4.0	10	RO PLANT-GENERATOR ROOM	BATTERY CHARGER	1(1x500)	15A SPN S/F			**500**
10	R	4.0	10		SPARE			-		
	Y	4.0	10		SPARE				-	
	B	4.0	10		SPARE					-
					TOTAL CONN. LOAD	**10.630 K.W.**		**3200**	**4030**	**3400**

DB-EX

2 WAYS TPN — 40A, TP, ISOLATOR

C.O.E.L.C.B. 40A, 300mA 4 POLE

CR No	Phase	W.SIZE sq.mm	MCB WITH	LOCATION	DESCRIPTION	NO. OF POINTS	CONTROLLED BY	R	Y	B
1	R	6.0	15A SP	EXTERNAL LIGHTS	EX1-EX4	4(1x90)	Controlled by 20A 2P contactor, Photocell and H-O-A selector	**360**		
	Y	6.0	15A SP	EXTERNAL LIGHTS	EX5-EX8	4(1x90)			**360**	
	B	6.0	15A SP	EXTERNAL LIGHTS	EX9-EX12	4(1x90)				**360**
2	R	-	15A SP		SPARE					
	Y	-	15A SP		SPARE					
	B	-	15A SP		SPARE					
					TOTAL CONN. LOAD	**01.080 K.W.**		**360**	**360**	**360**

REFERENCE DRAWINGS

SL.No	DRAWING No.	DESCRIPTION

REV.	DATE	DESCRIPTION	DRAWN	CHKD.	APPRD.
..	..	..	..	..	..
..	..	..	.	..	..
..	..	..	..	..	..
..	..	..	..	..	..
0	28-12-'15	DETAILED DESIGN SUBMISSION	BA	RDS	MA

REVISION

CLIENT

MINISTRY OF ENVIRONMENT & ENERGY
REPUBLIC OF MALDIVES

CONSULTANT:

دار الحبشي للاستشارات الهندسية
Al Habshi Consultants Office

PROJECT:
Consultancy Services for Survey, Design of Water supply Facilities in Tha.Vilifushi, F.Nilandhoo, B.Eydhafushi and Adh. Hanyaameedhoo, Maldives

DRAWING TITLE:
ELECTRICAL DB SCHEDULE

DESIGNED	DRAWN	CHECKED	APPROVED	SCALE	DATE
RDS	BA	RDS	MA	N.T.S	28-12-'15

PROJECT No.	SHEET No.	DRAWING No.
K-627	1 OF 1	BE-EL-104
REV. No.	0	

Copyright © 2015 by Al-Habshi Consultants Office

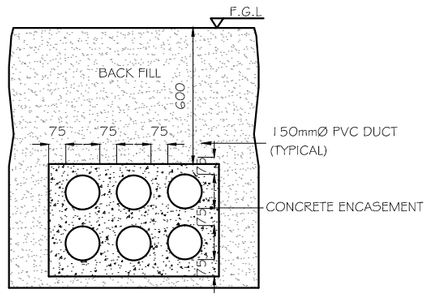

1 - DUCT BANK DETAIL

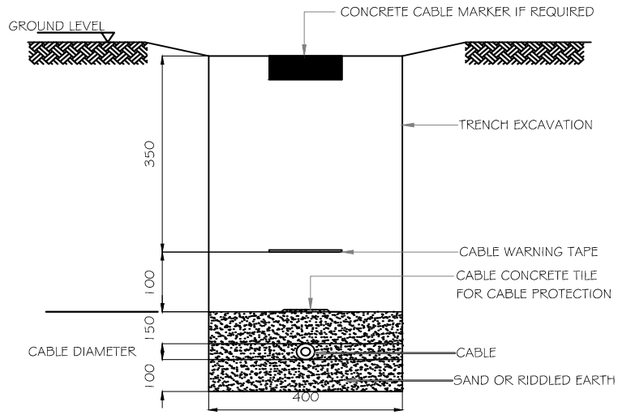

2 - DIRECT BURIED CABLES

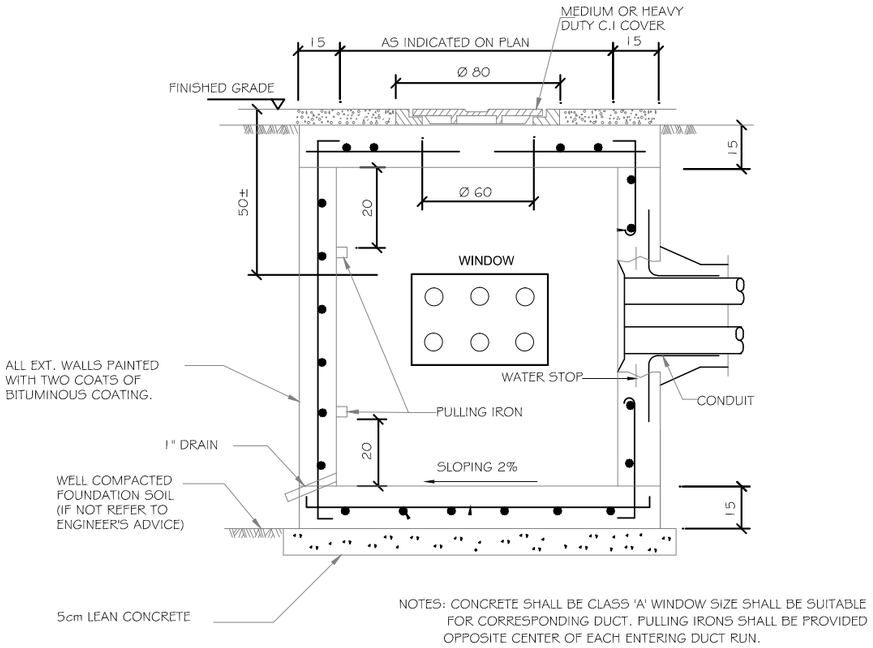

NOTES: CONCRETE SHALL BE CLASS 'A' WINDOW SIZE SHALL BE SUITABLE FOR CORRESPONDING DUCT. PULLING IRONS SHALL BE PROVIDED OPPOSITE CENTER OF EACH ENTERING DUCT RUN.

3 - MANHOLE DETAIL

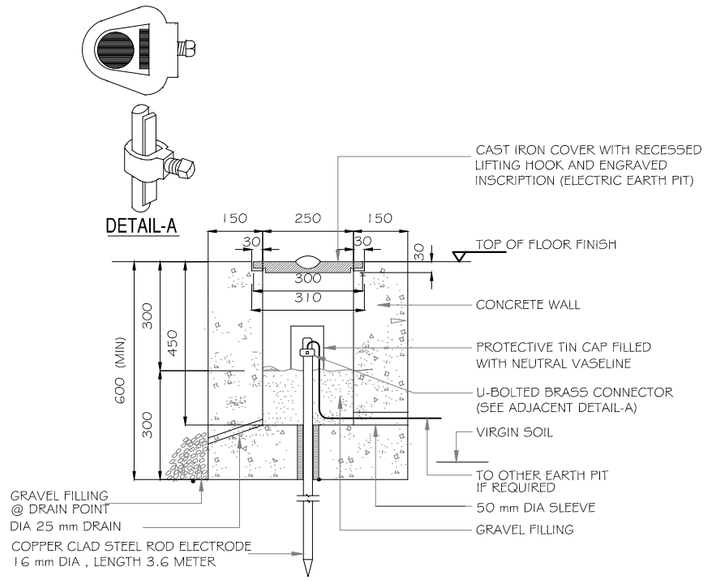

4 - EARTH PIT CONSTRUCTION (OUTDOOR)

REFERENCE DRAWINGS

SL.No	DRAWING No.	DESCRIPTION

REVISION

REV.	DATE	DESCRIPTION	DRAWN	CHKD.	APPRD.
..	..	..	..	..	..
..	..	..	.	..	..
..	..	..	..	..	..
..	..	..	..	..	..
0	28-12-'15	DETAILED DESIGN SUBMISSION	BA	RDS	MA

CLIENT
MINISTRY OF ENVIRONMENT & ENERGY
REPUBLIC OF MALDIVES

CONSULTANT:
ACO دار الحبشي للاستشارات الهندسية
Al Habshi Consultants Office

PROJECT:
Consultancy Services for Survey, Design of Water supply Facilities in Tha.Vilifushi, F.Nilandhoo, B.Eydhafushi and Adh. Hanyaameedhoo, Maldives

DRAWING TITLE:
ELECTRICAL TYPICAL DETAILS

DESIGNED	DRAWN	CHECKED	APPROVED	SCALE	DATE
RDS	BA	RDS	MA	1 : 50	28-12-'15

PROJECT No.	SHEET No.	DRAWING No.
K-627	1 OF 1	BE-EL-105
REV. No.	0	

Copyright © 2015 by Al-Habshi Consultants Office