CONSULTANCY SERVICES FOR SURVEY, DESIGN AND EIA WORKS OF WATER SUPPLY AND
SEWERAGE FACILITIES IN 6 ISLANDS, MALDIVES

PACKAGE 5

WATER SUPPLY SYSTEM OF V. KEYODHOO,MALDIVES

For Ministry of National Planning and Housing Infrastructure, Republic of Maldives

EPOCH
ASSOCIATES

T: +960 333 3528 E: info@epoch.associates W: wwww.epoch.associates
A: 4A, 4th Floor, M. Ahigasdhoshuge, Fareedhee Magu Male' Republic of Maldives

FEEDBACK INFRA
Making Infrastructure Happen

CONTENTS

OVERALL LAYOUT

Water Supply Network Layout	01
Water Supply Network Zone Layout	02
Water Supply Network - Zone 01	03
Water Supply Network - Zone 02	04
Water Supply Network - Zone 03	05
Rainwater Collection Network Layout	06
Rainwater Collection Network Zone Layout	07
Rainwater Collection Network - Zone 01	08
Rainwater Collection Network - Zone 02	09

DETAILED DRAWINGS FOR SPECIFIC COMPONENTS

WATER SUPPLY HOUSE AND COMMERCIAL/ INSTITUTION CONNECTIONS	W-(1)
VALVE CHAMBER DETAILS	W-(2)
THRUST BLOCK DETAILS	W-(3)
INTERNAL PIPE LAYOUT	W-(4)
IWRM PLANT P&I OVERVIEW	W-(5)
IWRM PLANT P&I DETAIL A	W-(6)
IWRM PLANT P&I DETAIL B	W-(7)
IWRM PLANT P&I DETAIL C	W-(8)
IWRM PLANT P&I DETAIL D	W-(9)
IWRM PLANT P&I DETAIL E	W-(10)
IWRM PLANT P&I DETAIL F	W-(11)
IWRM PLANT P&I DETAIL G	W-(12)
BOREHOLE DETAILS	W-(13)
BRINE TANK DETAILS	W-(14)
RAINWATER LIFT WELL DETAILS	W-(15)
PUMP SHED DETAILS	W-(16), W-(17)
PUMP SHED BEAM AND COLUMN DETAILS	W-(18)
TREATED WATER TANK DETAILS	W-(19)
RAINWATER HOLDING TANK DETAILS	W-(20)
BRINE HARBOUR DISCHARGE DETAILS	W-(21)
RAINWATER FIRST FLUSH MECHANISM	W-(22)
INTERNAL NETWORK LAYOUT - MOSQUE	W-(23)
INTERNAL NETWORK LAYOUT - KEYODHOO SCHOOL	W-(24)
INTERNAL NETWORK LAYOUT - PRESCHOOL	W-(25)
INTERNAL NETWORK LAYOUT - HEALTH CENTER	W-(26)
INTERNAL NETWORK LAYOUT - COUNCIL OFFICE	W-(27)
INTERNAL NETWORK LAYOUT - SOCIAL CENTER	W-(28)
LIGHT POST DETAILS	W-(29)

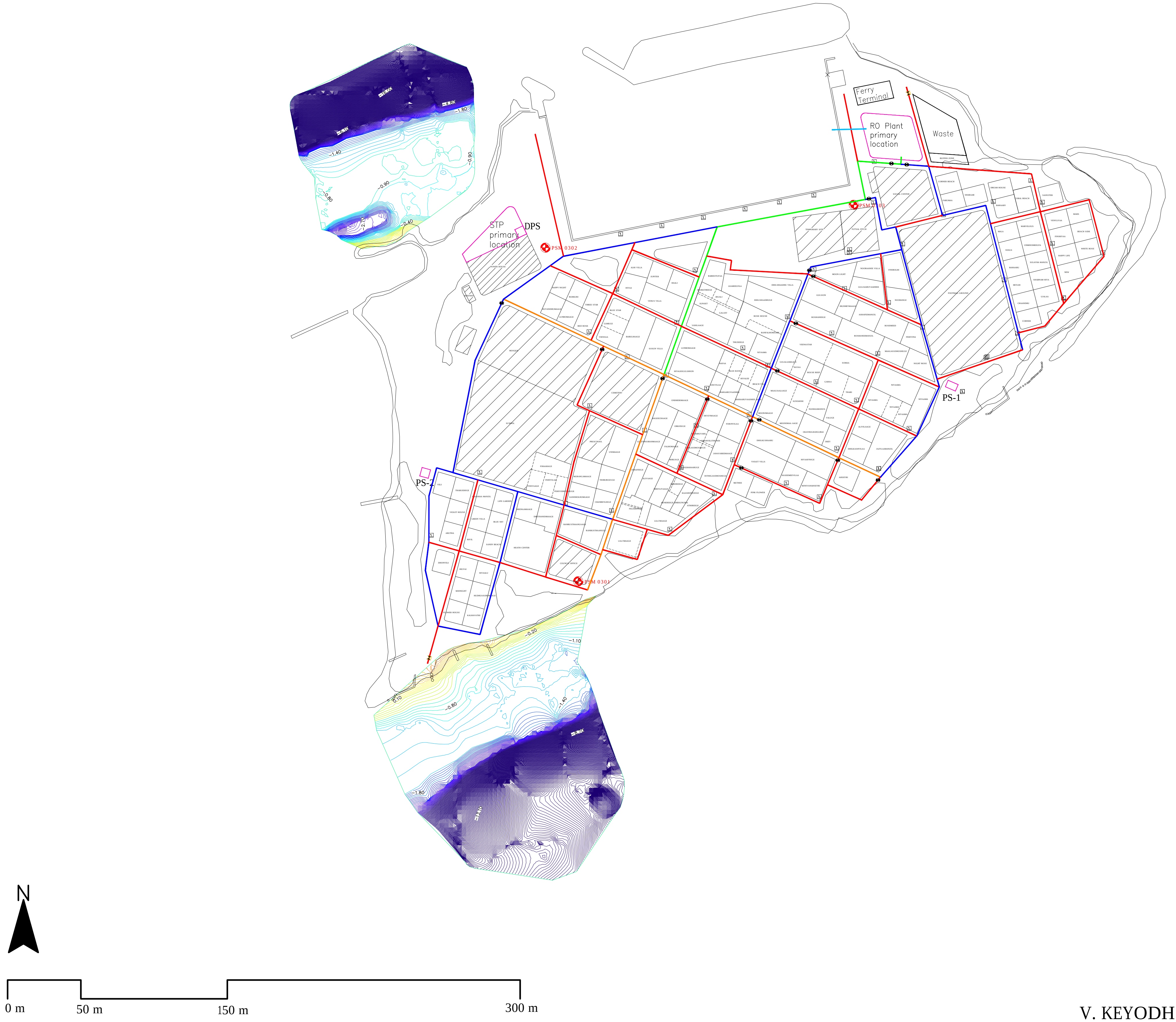

V. KEYODHOO WATER NETWORK LAYOUT

1:3000

Legend

🟥	Ø63 HDPE Water Main Distribution Pipe	🟦	Ø75 HDPE Water Main Distribution Pipe
🟪	Ø90 HDPE Water Main Distribution Pipe	🟧	Ø110 HDPE Water Main Distribution Pipe
🟩	Ø160 HDPE Water Main Distribution Pipe	🟦	Ø110 HDPE Brine Outfall Pipe
⊗	Gate Valves	⋈	Washout Valves
●	Junction		

Notes:
1. All levels are shown in meters.
2. All levels are shown from mean sea level.
3. This drawing to be read in conjunction with all other relevant drawing and specifications.
4. All pressure pipes and fittings shall be installed using electro-fusion and butt-fusion technologies.
5. All pressure pipes shall be laid in between 0.7m - 1.0m below natural ground level to achieve best flat alignment based on topographic survey.
6. All the service connections to the mains shall be made using electro-fusion saddle and coupler.
7. Minimum size of the main water supply network shall be OD 63mm PE100, PN10, SDR17 HDPE pipe.
8. Minimum size of the house service line shall be OD 25mm PE100, PN16, SDR11 HDPE pipe.
9. Minimum size of commercial and other institutional connection service line shall be 50mm, PE100, PN16, SDR11 HDPE pipe.

MAINS DISTRIBUTION

DIAMETER (mm)	LENGTH HDPE (m)	TYPE OF PIPE
63	2361	HDPE (PE100,PN10,SDR17)
75	1233	
110	441	
160	271	
Total	4306	

Gate Valves	- 16 nos
Washout Valves	- 02 nos

OUTFALL

DIAMETER (mm)	LENGTH HDPE (m)	TYPE OF PIPE
110	- 24m (on land)	HDPE (PE100,PN10,SDR11)

PSM BENCHMARKS

PERMANENT SURVEY MARK PSM 0301
338835.373E, 382648.909N
0.757m From MSL

PERMANENT SURVEY MARK PSM 0302
338812.937E, 382876.671N
0.723m From MSL

PERMANENT SURVEY MARK PSM 0303
339023.490E, 382905.977N
0.658m From MSL

REV. NO.	Date	Revision Description	Drawn	Chkd	Appd.
R00	JUNE 2020	STAGE -1	PD	SBC	SD

Title:
Consultancy Services for Survey, Design and EIA works of Water Supply and Sewerage Facilities in 6 islands, Maldives - Package 5

Sub Title:
Water Supply System in V. Keyodhoo

Client:
Ministry of National Planning, Housing and Infrastructure, Republic of Maldives

EPOCH ASSOCIATES
T: +960 333 3528
E: info@epoch.associates
W: wwww.epoch.associates
A: G. Rosary West,
Husnuheenaa Magu, Male', Maldives

FEEDBACK INFRA
Making Infrastructure Happen

Drawn:	F.I.A.	Checked:	M.S.S.
Designed:	F.I.A.	Approved:	I.W.
Date:	Sep 2020	SCALE (A3):	1:3000

Project No: EP-WS/2019/05

Rev: R-01

Page: 01

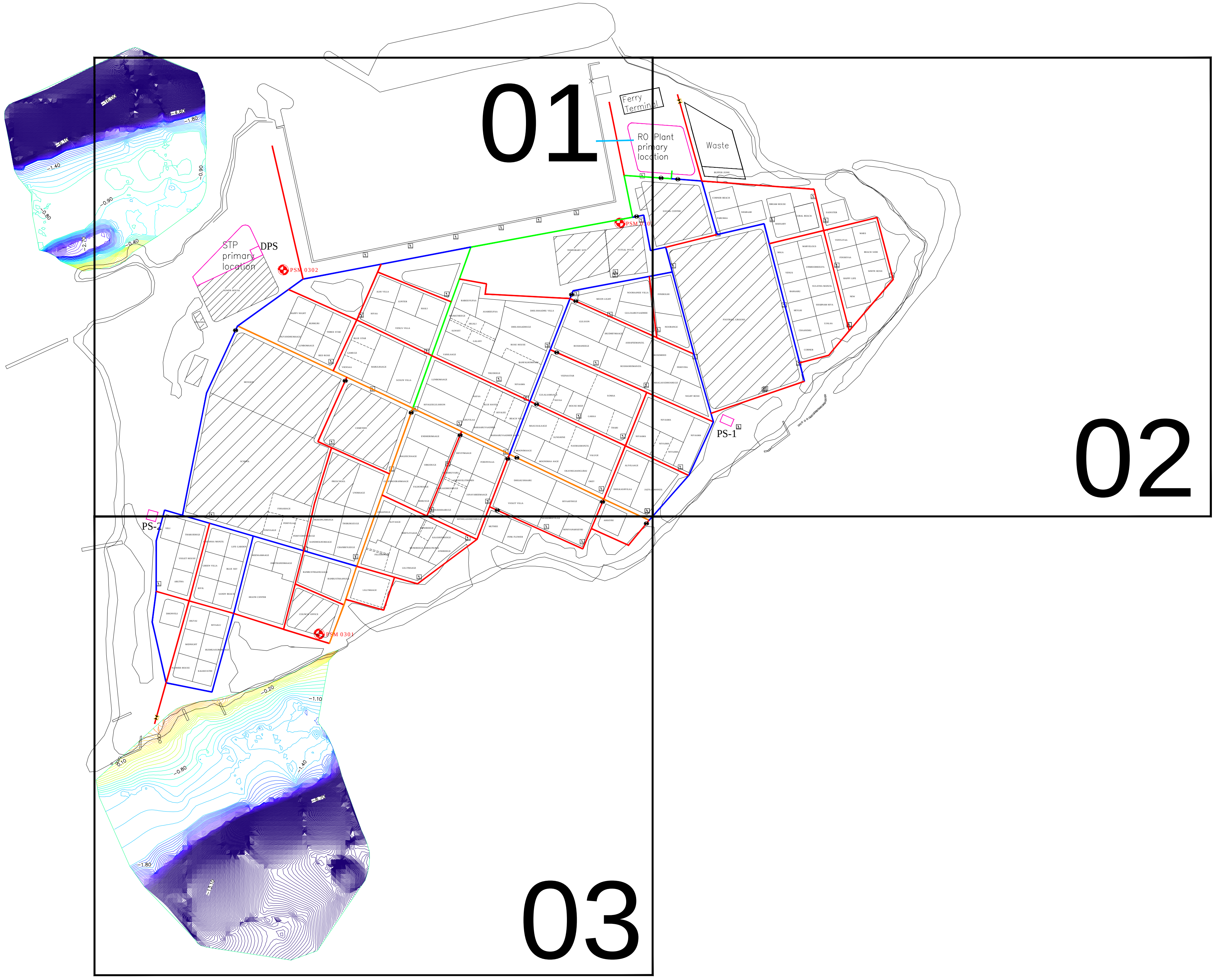

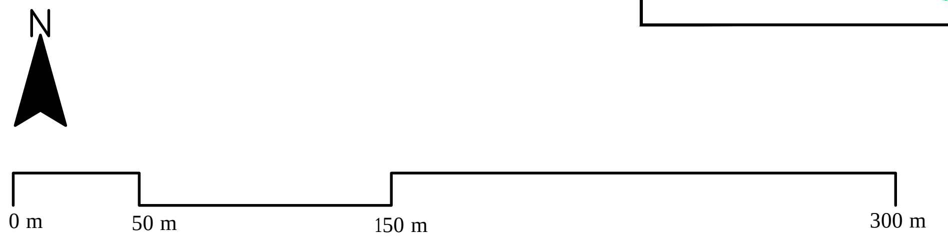

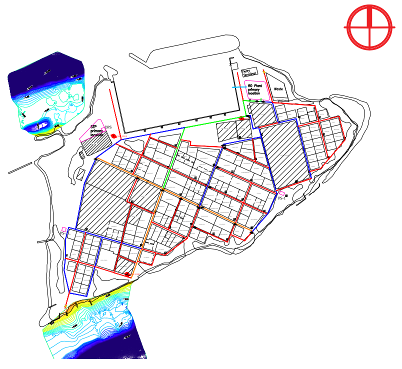

Legend

🟥	Ø63 HDPE Water Main Distribution Pipe	🟦	Ø75 HDPE Water Main Distribution Pipe
🟪	Ø90 HDPE Water Main Distribution Pipe	🟧	Ø110 HDPE Water Main Distribution Pipe
🟩	Ø160 HDPE Water Main Distribution Pipe	🟦	Ø110 HDPE Brine Outfall Pipe
⊗	Gate Valves	⋈	Washout Valves
●	Junction		

Notes:
1. All levels are shown in meters.
2. All levels are shown from mean sea level.
3. This drawing to be read in conjunction with all other relevant drawing and specifications.
4. All pressure pipes and fittings shall be installed using electro-fusion and butt-fusion technologies.
5. All pressure pipes shall be laid in between 0.7m - 1.0m below natural ground level to achieve best flat alignment based on topographic survey.
6. All the service connections to the mains shall be made using electro-fusion saddle and coupler.
7. Minimum size of the main water supply network shall be OD 63mm PE100, PN10, SDR17 HDPE pipe.
8. Minimum size of the house service line shall be OD 25mm PE100, PN16, SDR11 HDPE pipe.
9. Minimum size of commercial and other institutional connection service line shall be 50mm, PE100, PN16, SDR11 HDPE pipe.

MAINS DISTRIBUTION

DIAMETER (mm)	LENGTH HDPE (m)	TYPE OF PIPE
63	2361	HDPE (PE100,PN10,SDR17)
75	1233	
110	441	
160	271	
Total	4306	

Gate Valves	- 16 nos
Washout Valves	- 02 nos

OUTFALL

DIAMETER (mm)	LENGTH HDPE (m)	TYPE OF PIPE
110	- 24m (on land)	HDPE (PE100,PN10,SDR11)

PSM BENCHMARKS

PERMANENT SURVEY MARK PSM 0301
338835.373E, 382648.909N
0.757m From MSL

PERMANENT SURVEY MARK PSM 0302
338812.937E, 382876.671N
0.723m From MSL

PERMANENT SURVEY MARK PSM 0303
339023.490E, 382905.977N
0.658m From MSL

REV. NO.	Date	Revision Description	Drawn	Chkd	Appd.
R00	JUNE 2020	STAGE -1	PD	SBC	SD

Title:
Consultancy Services for Survey, Design and EIA works of Water Supply and Sewerage Facilities in 6 islands, Maldives - Package 5

Sub Title:
Water Supply System in V. Keyodhoo

Client:
Ministry of National Planning, Housing and Infrastructure, Republic of Maldives

EPOCH ASSOCIATES

T: +960 333 3528
E: info@epoch.associates
W: wwww.epoch.associates
A: G. Rosary West,
Husnuheenaa Magu, Male', Maldives

FEEDBACK INFRA
Making Infrastructure Happen

Drawn: F.I.A.
Checked: M.S.S.
Designed: F.I.A.
Approved: I.W.
Date: Sep 2020
SCALE (A3): 1:3000
Project No: EP-WS/2019/05
Rev: R-01
Page: 02

V. KEYODHOO WATER NETWORK ZONE LAYOUT

1:3000

WATER SUPPLY NETWORK - ZONE 1

1:1000

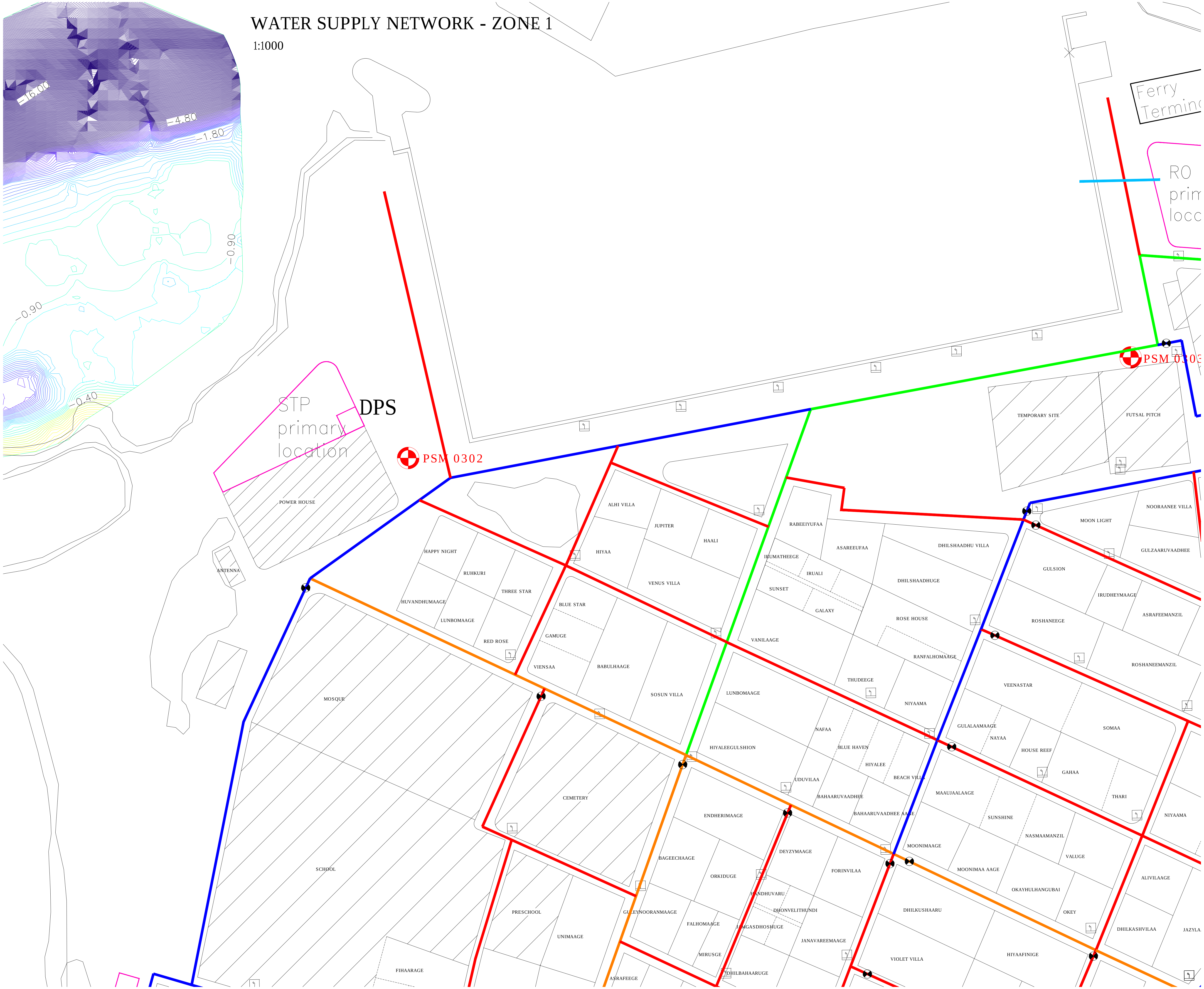

-16.00
-4.80
-1.80
-0.90
-0.90
-0.40
Ferry Terminal
RO prim locc
PSM 0303
PSM 0302
STP primary location
DPS
POWER HOUSE
ANTENNA
TEMPORARY SITE
FUTSAL PITCH
ALHI VILLA
JUPITER
HAALI
HIYAA
VENUS VILLA
HAPPY NIGHT
RUHKURI
THREE STAR
HUVANDHUMAAGE
LUNBOMAAGE
RED ROSE
BLUE STAR
GAMUGE
VIENSAA
BABULHAAGE
SOSUN VILLA
MOSQUE
SCHOOL
CEMETERY
PRESCHOOL
UNIMAAGE
FIHAARAGE
RABEEIYUFAA
ASAREEUFAA
IRUMATHEEGE
IRUALI
SUNSET
GALAXY
VANILAAGE
DHILSHAADHU VILLA
DHILSHAADHUGE
ROSE HOUSE
RANFALHOMAAGE
THUDEEGE
NIYAAMA
LUNBOMAAGE
NAFAA
BLUE HAVEN
HIYALEE
HIYALEEGULSHION
UDUVILAA
BAHAARUVAADHEE
BAHAARUVAADHEE AAGE
BEACH VILLA
ENDHERIMAAGE
BAGEECHAAGE
ORKIDUGE
DEYZYMAAGE
FORINVILAA
HANDHUVARU
DHONVELITHUNDI
GULEYNOORANMAAGE
FALHOMAAGE
MAGASDHOSHUGE
MIRUSGE
JANAVAREEMAAGE
DHILBAHAARUGE
ASRAFEEGE
MOON LIGHT
NOORAANEE VILLA
GULZAARUVAADHEE
GULSION
IRUDHEYMAAGE
ASRAFEEMANZIL
ROSHANEEGE
ROSHANEEMANZIL
VEENASTAR
GULALAAMAAGE
NAYAA
HOUSE REEF
SOMAA
GAHAA
THARI
NIYAAMA
MAAUJAALAAGE
SUNSHINE
NASMAAMANZIL
VALUGE
MOONIMAAGE
MOONIMAA AAGE
OKAYHULHANGUBAI
OKEY
ALIVILAAGE
DHILKUSHAARU
DHILKASHVILAA
JAZYLA
VIOLET VILLA
HIYAAFINIGE

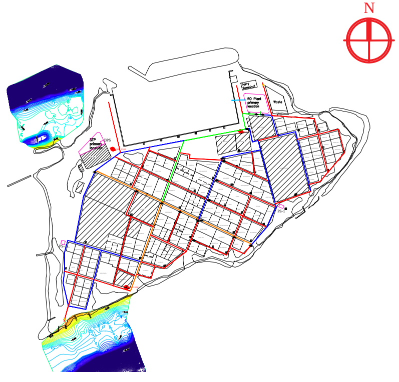

Legend

🟥 Ø63 HDPE Water Main Distribution Pipe	🟦 Ø75 HDPE Water Main Distribution Pipe
Ø90 HDPE Water Main Distribution Pipe	🟧 Ø110 HDPE Water Main Distribution Pipe
🟩 Ø160 HDPE Water Main Distribution Pipe	Ø110 HDPE Brine Outfall Pipe
⊗ Gate Valves	⋈ Washout Valves
● Junction	

Notes:
1. All levels are shown in meters.
2. All levels are shown from mean sea level.
3. This drawing to be read in conjunction with all other relevant drawing and specifications.
4. All pressure pipes and fittings shall be installed using electro-fusion and butt-fusion technologies.
5. All pressure pipes shall be laid in between 0.7m - 1.0m below natural ground level to achieve best flat alignment based on topographic survey.
6. All the service connections to the mains shall be made using electro-fusion saddle and coupler.
7. Minimum size of the main water supply network shall be OD 63mm PE100, PN10, SDR17 HDPE pipe.
8. Minimum size of the house service line shall be OD 25mm PE100, PN16, SDR11 HDPE pipe.
9. Minimum size of commercial and other institutional connection service line shall be 50mm, PE100, PN16, SDR11 HDPE pipe.

MAINS DISTRIBUTION

DIAMETER (mm)	LENGTH HDPE (m)	TYPE OF PIPE
63	2361	HDPE (PE100,PN10,SDR17)
75	1233	
110	441	
160	271	
Total	4306	

Gate Valves	- 16 nos
Washout Valves	- 02 nos

OUTFALL

DIAMETER (mm)	LENGTH HDPE (m)	TYPE OF PIPE
110	- 24m (on land)	HDPE (PE100,PN10,SDR11)

PSM BENCHMARKS

PERMANENT SURVEY MARK PSM 0301
338835.373E, 382648.909N
0.757m From MSL

PERMANENT SURVEY MARK PSM 0302
338812.937E, 382876.671N
0.723m From MSL

PERMANENT SURVEY MARK PSM 0303
339023.490E, 382905.977N
0.658m From MSL

REV. NO.	Date	Revision Description	Drawn	Chkd	Appd.
R00	JUNE 2020	STAGE -1	PD	SBC	SD

Title:
Consultancy Services for Survey, Design and EIA works of Water Supply and Sewerage Facilities in 6 islands, Maldives - Package 5

Sub Title:
Water Supply System in V. Keyodhoo

Client:
Ministry of National Planning, Housing and Infrastructure, Republic of Maldives

EPOCH ASSOCIATES

T: +960 333 3528
E: info@epoch.associates
W: wwww.epoch.associates
A: G. Rosary West,
Husnuheenaa Magu, Male', Maldives

FEEDBACK INFRA
Making Infrastructure Happen

Drawn:	F.I.A.	Checked:	M.S.S.
Designed:	F.I.A.	Approved:	I.W.
Date:	Sep 2020	SCALE (A3):	1:1000

Project No: EP-WS/2019/05

Rev: R-01

Page: 03

WATER SUPPLY NETWORK - ZONE 2

1:1000

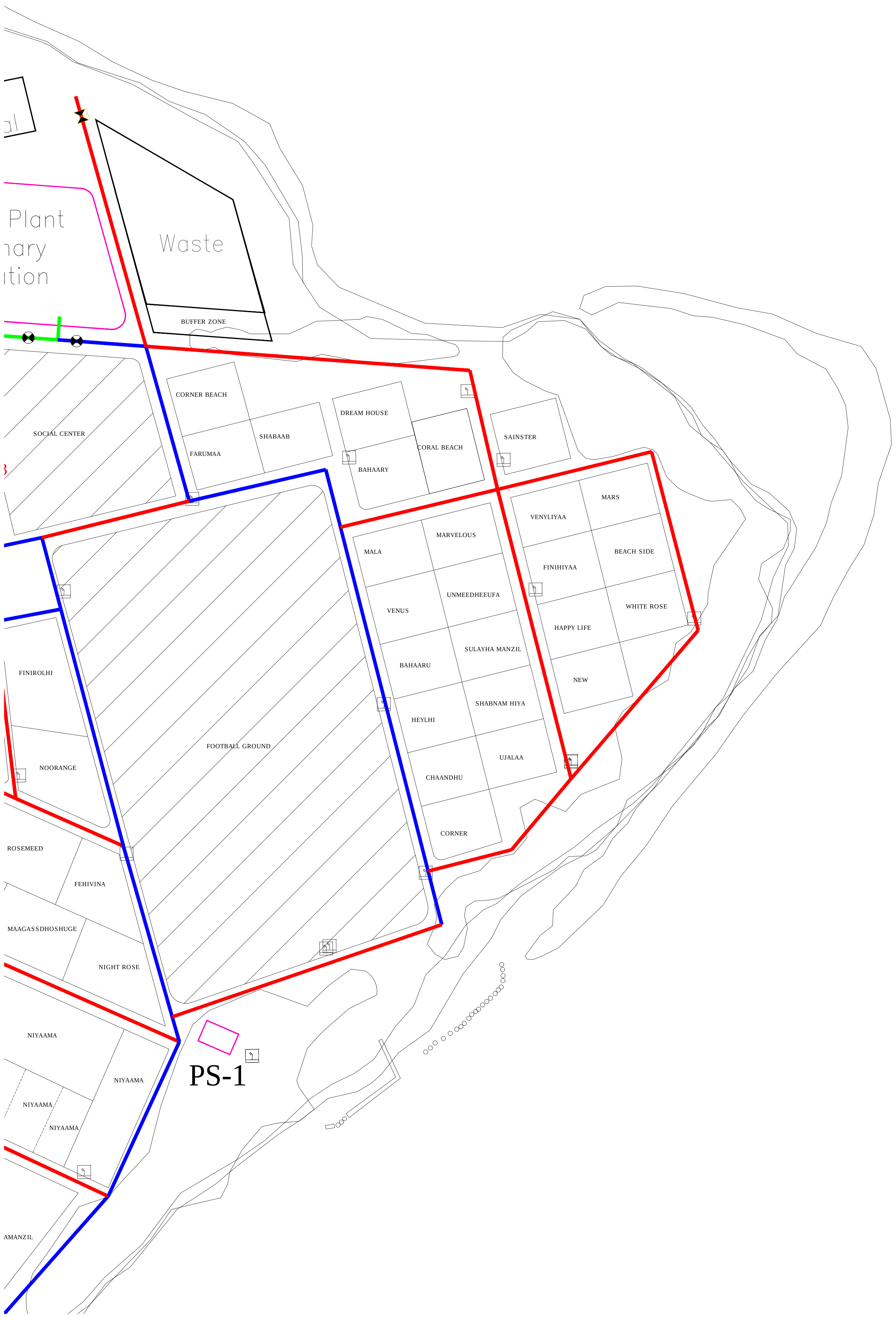
al
Plant
nary
ition
Waste
BUFFER ZONE
SOCIAL CENTER
CORNER BEACH
SHABAAB
FARUMAA
DREAM HOUSE
CORAL BEACH
BAHAARY
SAINSTER
MARS
VENYLIYAA
MALA
MARVELOUS
FINIHIYAA
BEACH SIDE
VENUS
UNMEEDHEEUFA
HAPPY LIFE
WHITE ROSE
BAHAARU
SULAYHA MANZIL
NEW
FINIROLHI
FOOTBALL GROUND
HEYLHI
SHABNAM HIYA
UJALAA
NOORANGE
CHAANDHU
CORNER
ROSEMEED
FEHIVINA
MAAGASSDHOSHUGE
NIGHT ROSE
NIYAAMA
NIYAAMA
PS-1
NIYAAMA
NIYAAMA
AMANZIL

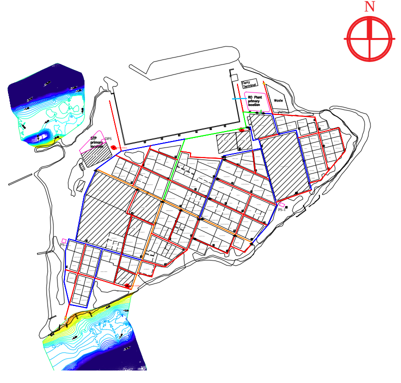

Legend

🟥	Ø63 HDPE Water Main Distribution Pipe	🟦	Ø75 HDPE Water Main Distribution Pipe
🟪	Ø90 HDPE Water Main Distribution Pipe	🟧	Ø110 HDPE Water Main Distribution Pipe
🟩	Ø160 HDPE Water Main Distribution Pipe	🟦	Ø110 HDPE Brine Outfall Pipe
⊗	Gate Valves	⧓	Washout Valves
●	Junction		

Notes:

1. All levels are shown in meters.
2. All levels are shown from mean sea level.
3. This drawing to be read in conjunction with all other relevant drawing and specifications.
4. All pressure pipes and fittings shall be installed using electro-fusion and butt-fusion technologies.
5. All pressure pipes shall be laid in between 0.7m - 1.0m below natural ground level to achieve best flat alignment based on topographic survey.
6. All the service connections to the mains shall be made using electro-fusion saddle and coupler.
7. Minimum size of the main water supply network shall be OD 63mm PE100, PN10, SDR17 HDPE pipe.
8. Minimum size of the house service line shall be OD 25mm PE100, PN16, SDR11 HDPE pipe.
9. Minimum size of commercial and other institutional connection service line shall be 50mm, PE100, PN16, SDR11 HDPE pipe.

MAINS DISTRIBUTION

DIAMETER (mm)	LENGTH HDPE (m)	TYPE OF PIPE
63	2361	HDPE (PE100,PN10,SDR17)
75	1233	
110	441	
160	271	
Total	4306	

Gate Valves	- 16 nos
Washout Valves	- 02 nos

OUTFALL

DIAMETER (mm)	LENGTH HDPE (m)	TYPE OF PIPE
110	- 24m (on land)	HDPE (PE100,PN10,SDR11)

PSM BENCHMARKS

⊕	PERMANENT SURVEY MARK PSM 0301 338835.373E, 382648.909N 0.757m From MSL
⊕	PERMANENT SURVEY MARK PSM 0302 338812.937E, 382876.671N 0.723m From MSL
⊕	PERMANENT SURVEY MARK PSM 0303 339023.490E, 382905.977N 0.658m From MSL

REV. NO.	Date	Revision Description	Drawn	Chkd	Appd.
R00	JUNE 2020	STAGE -1	PD	SBC	SD

Title:

Consultancy Services for Survey, Design and EIA works of Water Supply and Sewerage Facilities in 6 islands, Maldives - Package 5

Sub Title:

Water Supply System in V. Keyodhoo

Client:

Ministry of National Planning, Housing and Infrastructure, Republic of Maldives

EPOCH ASSOCIATES
T: +960 333 3528
E: info@epoch.associates
W: wwww.epoch.associates
A: G. Rosary West,
Husnuheenaa Magu, Male', Maldives

FEEDBACK INFRA
Making Infrastructure Happen

Drawn:	F.I.A.	Checked:	M.S.S.
Designed:	F.I.A.	Approved:	I.W.
Date:	Sep 2020	SCALE (A3):	1:1000

Project No: EP-WS/2019/05

Rev: R-01

Page: 04

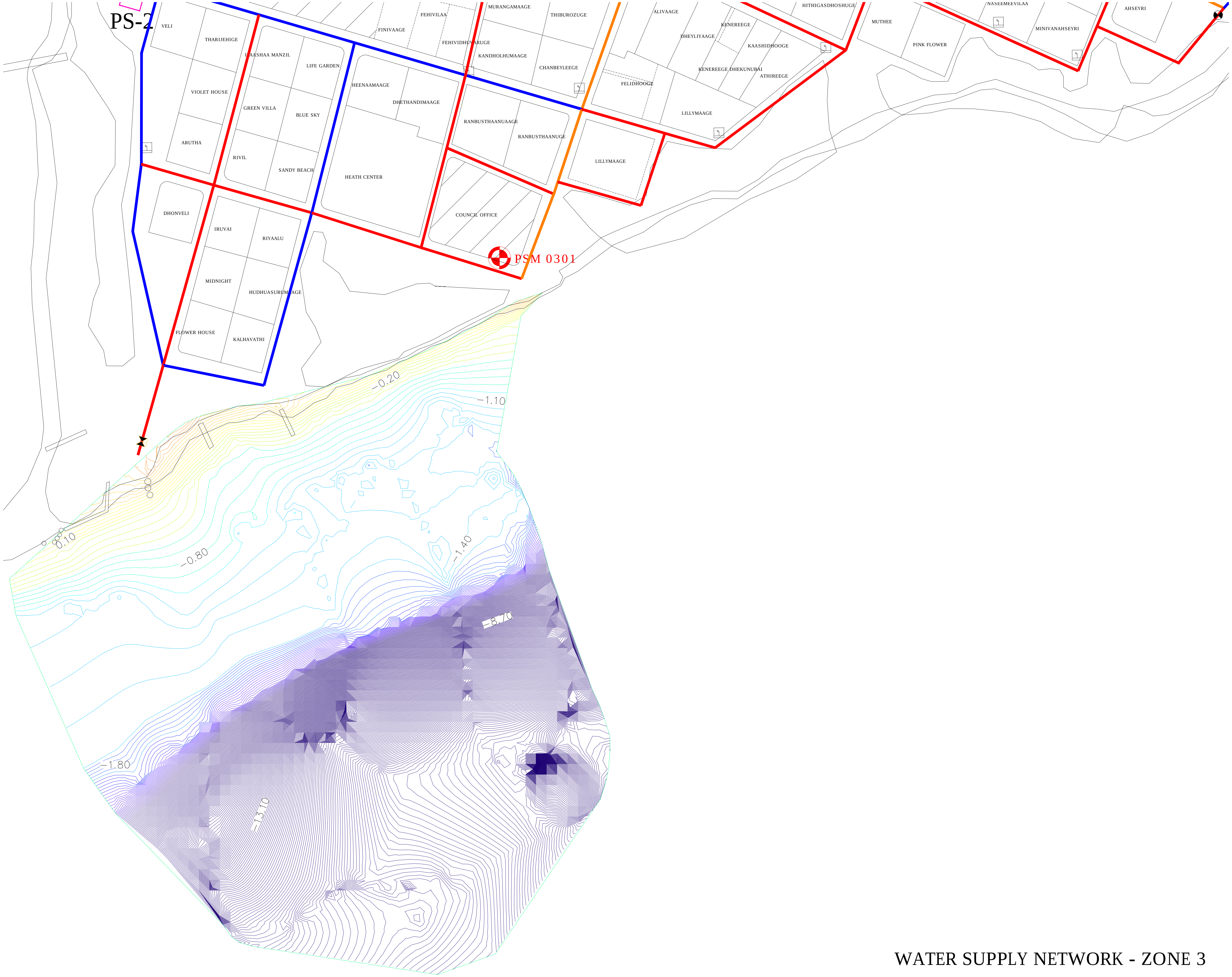
PS-2
VELI
THARIJEHIGE
MURANGAMAAGE
FEHIVILAA
FINIVAAGE
THIBUROZUGE
ALIVAAGE
HITHIGASDHOSHUGE
MUTHEE
NASEEMEEVILAA
AHSEYRI
KENEREEGE
DHEYLIYAAGE
KAASHIDHOOGE
PINK FLOWER
MINIVANAHSEYRI
LAASHAA MANZIL
LIFE GARDEN
FEHIVIDHUVARUGE
KANDHOLHUMAAGE
CHANBEYLEEGE
KENEREEGE DHEKUNUBAI
ATHIREEGE
VIOLET HOUSE
HEENAAMAAGE
DHETHANDIMAAGE
FELIDHOOGE
GREEN VILLA
BLUE SKY
LILLYMAAGE
RANBUSTHAANUAAGE
RANBUSTHAANUGE
ARUTHA
RIVIL
SANDY BEACH
HEATH CENTER
LILLYMAAGE
DHONVELI
IRUVAI
RIYAALU
COUNCIL OFFICE
PSM 0301
MIDNIGHT
HUDHUASURUMAAGE
FLOWER HOUSE
KALHAVATHI
-0.20
-1.10
0.10
-0.80
-1.40
-8.70
-1.80
-13.10

WATER SUPPLY NETWORK - ZONE 3

1:1000

Legend

🟥	Ø63 HDPE Water Main Distribution Pipe	🟦	Ø75 HDPE Water Main Distribution Pipe
🟪	Ø90 HDPE Water Main Distribution Pipe	🟧	Ø110 HDPE Water Main Distribution Pipe
🟩	Ø160 HDPE Water Main Distribution Pipe	🟦	Ø110 HDPE Brine Outfall Pipe
⊗	Gate Valves	⧓	Washout Valves
●	Junction		

Notes:

1. All levels are shown in meters.
2. All levels are shown from mean sea level.
3. This drawing to be read in conjunction with all other relevant drawing and specifications.
4. All pressure pipes and fittings shall be installed using electro-fusion and butt-fusion technologies.
5. All pressure pipes shall be laid in between 0.7m - 1.0m below natural ground level to achieve best flat alignment based on topographic survey.
6. All the service connections to the mains shall be made using electro-fusion saddle and coupler.
7. Minimum size of the main water supply network shall be OD 63mm PE100, PN10, SDR17 HDPE pipe.
8. Minimum size of the house service line shall be OD 25mm PE100, PN16, SDR11 HDPE pipe.
9. Minimum size of commercial and other institutional connection service line shall be 50mm, PE100, PN16, SDR11 HDPE pipe.

MAINS DISTRIBUTION

DIAMETER (mm)	LENGTH HDPE (m)	TYPE OF PIPE
63	2361	HDPE (PE100,PN10,SDR17)
75	1233	
110	441	
160	271	
Total	4306	

Gate Valves	- 16 nos
Washout Valves	- 02 nos

OUTFALL

DIAMETER (mm)	LENGTH HDPE (m)	TYPE OF PIPE
110	- 24m (on land)	HDPE (PE100,PN10,SDR11)

PSM BENCHMARKS

PERMANENT SURVEY MARK PSM 0301
338835.373E, 382648.909N
0.757m From MSL

PERMANENT SURVEY MARK PSM 0302
338812.937E, 382876.671N
0.723m From MSL

PERMANENT SURVEY MARK PSM 0303
339023.490E, 382905.977N
0.658m From MSL

R00	JUNE 2020	STAGE -1	PD	SBC	SD
REV. NO.	Date	Revision Description	Drawn	Chkd	Appd.

Title:

Consultancy Services for Survey, Design and EIA works of Water Supply and Sewerage Facilities in 6 islands, Maldives - Package 5

Sub Title:

Water Supply System in V. Keyodhoo

Client:

Ministry of National Planning, Housing and Infrastructure, Republic of Maldives

EPOCH ASSOCIATES
T: +960 333 3528
E: info@epoch.associates
W: wwww.epoch.associates
A: G. Rosary West,
Husnuheenaa Magu, Male', Maldives

FEEDBACK INFRA
Making Infrastructure Happen

Drawn:	F.I.A.	Checked:	M.S.S.
Designed:	F.I.A.	Approved:	I.W.
Date:	Sep 2020	SCALE (A3):	1:1000

Project No: EP-WS/2019/05

Rev: R-01

Page: 05

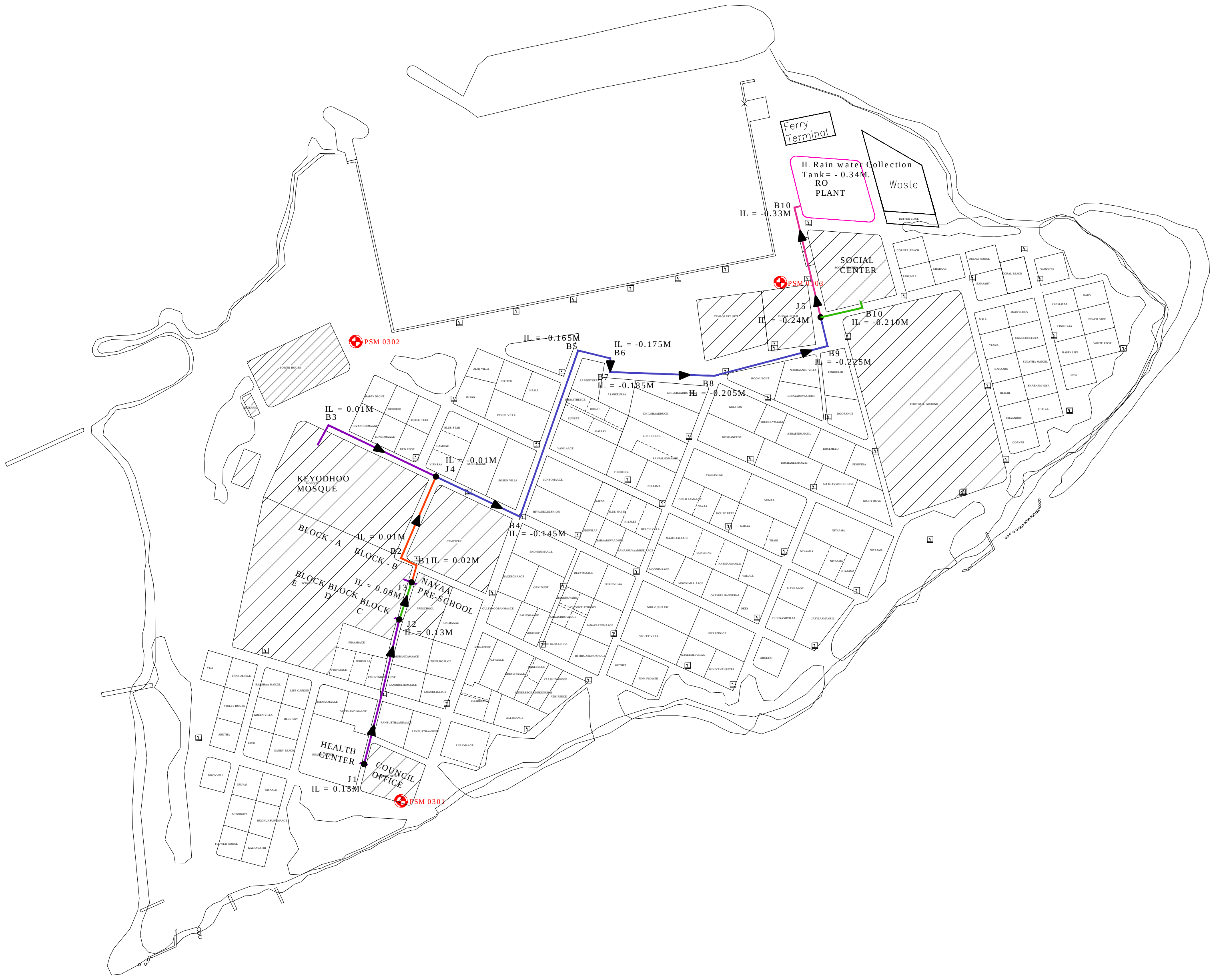
Ferry Terminal
IL Rain water Collection Tank= - 0.34M.
RO PLANT
Waste
BUFFER ZONE
B10
IL = -0.33M
SOCIAL CENTER
PSM 0303
J5
IL = -0.24M
B10
IL = -0.210M
B9
IL = -0.225M
IL = -0.165M
B5
IL = -0.175M
B6
B7
IL = -0.185M
B8
IL = -0.205M
PSM 0302
IL = 0.01M
B3
IL = -0.01M
J4
KEYODHOO MOSQUE
B4
IL = -0.145M
BLOCK - A
BLOCK - B
BLOCK E
BLOCK D
BLOCK C
IL = 0.01M
B2
B1 IL = 0.02M
IL = 0.08M
J3
NAYAA PRE-SCHOOL
J2
IL = 0.13M
HEALTH CENTER
COUNCIL OFFICE
J1
IL = 0.15M
PSM 0301
FOOTBALL GROUND
POWER HOUSE
CEMETERY

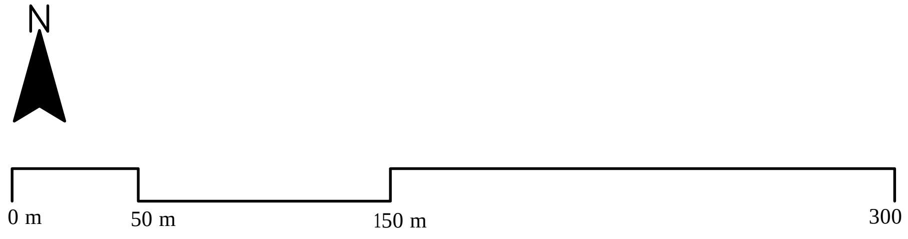
N
0 m
50 m
150 m
300 m

V. KEYODHOO RAINWATER COLLECTION NETWORK LAYOUT

1:3000

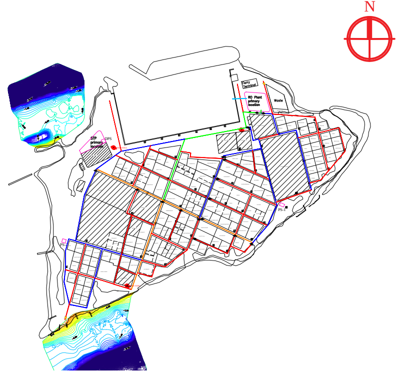

Legend

▬	Ø160 HDPE Rainwater Flow Pipe
▬	Ø250 HDPE Rainwater Flow Pipe
▬	Ø355 HDPE Rainwater Flow Pipe
●	Junction
▬	Ø200 HDPE Rainwater Flow Pipe
▬	Ø280 HDPE Rainwater Flow Pipe

Notes:

1. All levels are shown in meters.
2. All levels are shown from mean sea level.
3. This drawing to be read in conjunction with all other relevant drawing and specifications.
4. All gravity pipes should be HDPE PE100, PN6, SDR26 pipes.
5. All gravity pipes are to be laid as per invert levels indicated. Any change based on site condition should be made based on approval from engineer.

RAINWATER FLOW PIPES

DIAMETER (mm)	LENGTH HDPE (m)	TYPE OF PIPE
160	157	HDPE (PE100,PN6,SDR26)
200	44	
250	61	
280	281	
355	60	
Total	603	

PSM BENCHMARKS

PERMANENT SURVEY MARK PSM 0301
338835.373E, 382648.909N
0.757m From MSL

PERMANENT SURVEY MARK PSM 0302
338812.937E, 382876.671N
0.723m From MSL

PERMANENT SURVEY MARK PSM 0303
339023.490E, 382905.977N
0.658m From MSL

R00	JUNE 2020	STAGE -1	PD	SBC	SD
REV. NO.	Date	Revision Description	Drawn	Chkd	Appd.

Title:

Consultancy Services for Survey, Design and EIA works of Water Supply and Sewerage Facilities in 6 islands, Maldives - Package 5

Sub Title:

Water Supply System in V. Keyodhoo

Client:

Ministry of National Planning, Housing and Infrastructure, Republic of Maldives

EPOCH ASSOCIATES
T: +960 333 3528
E: info@epoch.associates
W: wwww.epoch.associates
A: G. Rosary West,
Husnuheenaa Magu, Male', Maldives

FEEDBACK INFRA
Making Infrastructure Happen

Drawn: F.I.A.
Checked: M.S.S.
Designed: F.I.A.
Approved: I.W.
Date: Sep 2020
SCALE (A3): 1:3000
Project No: EP-WS/2019/05
Rev: R-01
Page: 06

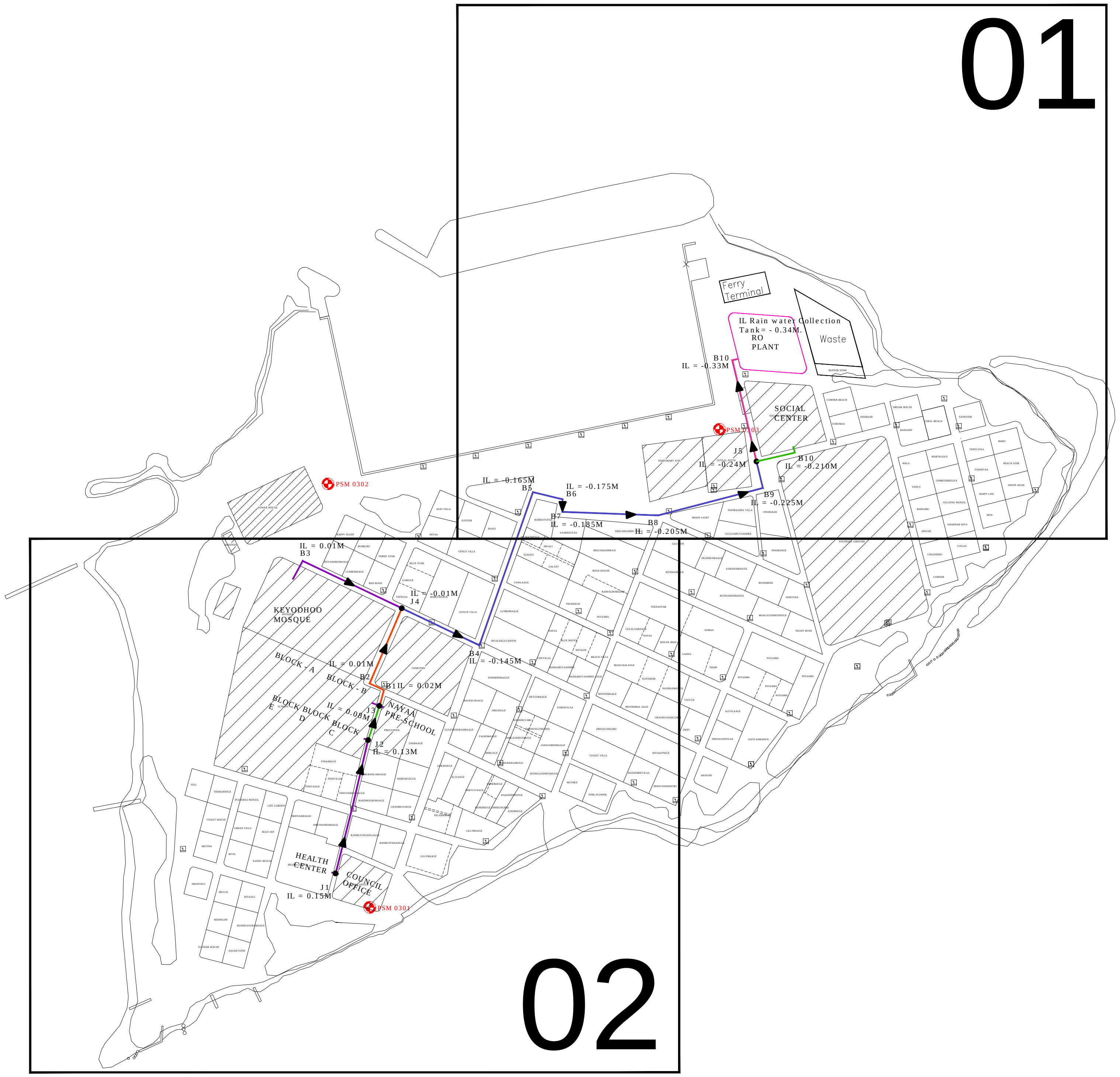
01
02
Ferry Terminal
IL Rain water Collection Tank= - 0.34M.
RO PLANT
Waste
B10
IL = -0.33M
SOCIAL CENTER
PSM 0303
J5
IL = -0.24M
B10
IL = -0.210M
B9
IL = -0.225M
IL = -0.165M
B5
IL = -0.175M
B6
B7
IL = -0.185M
B8
IL = -0.205M
PSM 0302
IL = 0.01M
B3
IL = -0.01M
J4
KEYODHOO MOSQUE
B4
IL = -0.145M
BLOCK - A
BLOCK - B
IL = 0.01M
B2
B1 IL = 0.02M
BLOCK E
BLOCK D
BLOCK C
IL = 0.08M
J3
NAYAA PRE-SCHOOL
J2
IL = 0.13M
HEALTH CENTER
COUNCIL OFFICE
J1
IL = 0.15M
PSM 0301

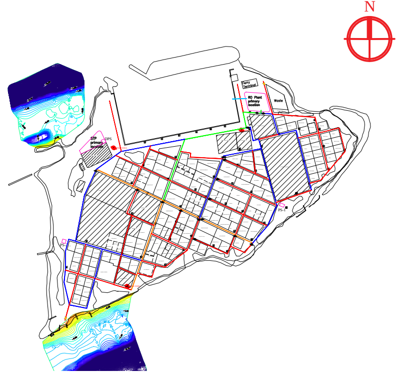

Legend

Ø160 HDPE Rainwater Flow Pipe	Ø200 HDPE Rainwater Flow Pipe
Ø250 HDPE Rainwater Flow Pipe	Ø280 HDPE Rainwater Flow Pipe
Ø355 HDPE Rainwater Flow Pipe	
● Junction	

Notes:
1. All levels are shown in meters.
2. All levels are shown from mean sea level.
3. This drawing to be read in conjunction with all other relevant drawing and specifications.
4. All gravity pipes should be HDPE PE100, PN6, SDR26 pipes.
5. All gravity pipes are to be laid as per invert levels indicated. Any change based on site condition should be made based on approval from engineer.

RAINWATER FLOW PIPES

DIAMETER (mm)	LENGTH HDPE (m)	TYPE OF PIPE
160	157	HDPE (PE100,PN6,SDR26)
200	44	
250	61	
280	281	
355	60	
Total	603	

PSM BENCHMARKS

PERMANENT SURVEY MARK PSM 0301
338835.373E, 382648.909N
0.757m From MSL

PERMANENT SURVEY MARK PSM 0302
338812.937E, 382876.671N
0.723m From MSL

PERMANENT SURVEY MARK PSM 0303
339023.490E, 382905.977N
0.658m From MSL

REV. NO.	Date	Revision Description	Drawn	Chkd	Appd.
R00	JUNE 2020	STAGE -1	PD	SBC	SD

Title:
Consultancy Services for Survey, Design and EIA works of Water Supply and Sewerage Facilities in 6 islands, Maldives - Package 5

Sub Title:
Water Supply System in V. Keyodhoo

Client:
Ministry of National Planning, Housing and Infrastructure, Republic of Maldives

EPOCH ASSOCIATES
T: +960 333 3528
E: info@epoch.associates
W: wwww.epoch.associates
A: G. Rosary West,
Husnuheenaa Magu, Male', Maldives

FEEDBACK INFRA
Making Infrastructure Happen

Drawn: F.I.A.
Checked: M.S.S.
Designed: F.I.A.
Approved: I.W.
Date: Sep 2020
SCALE (A3): 1:3000
Project No: EP-WS/2019/05
Rev: R-01
Page: 07

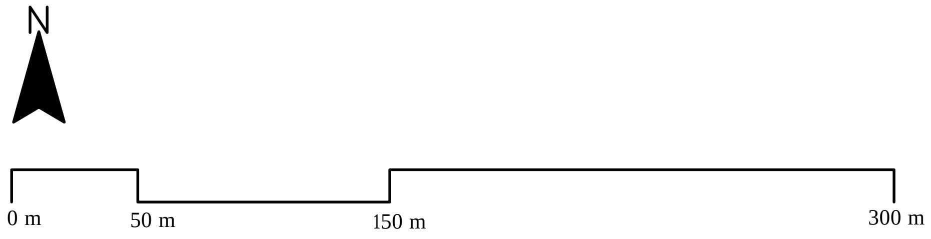
N
0 m
50 m
150 m
300 m

V. KEYODHOO RAINWATER COLLECTION NETWORK ZONE LAYOUT

1:3000

RAINWATER COLLECTION NETWORK - ZONE 1

1:1000

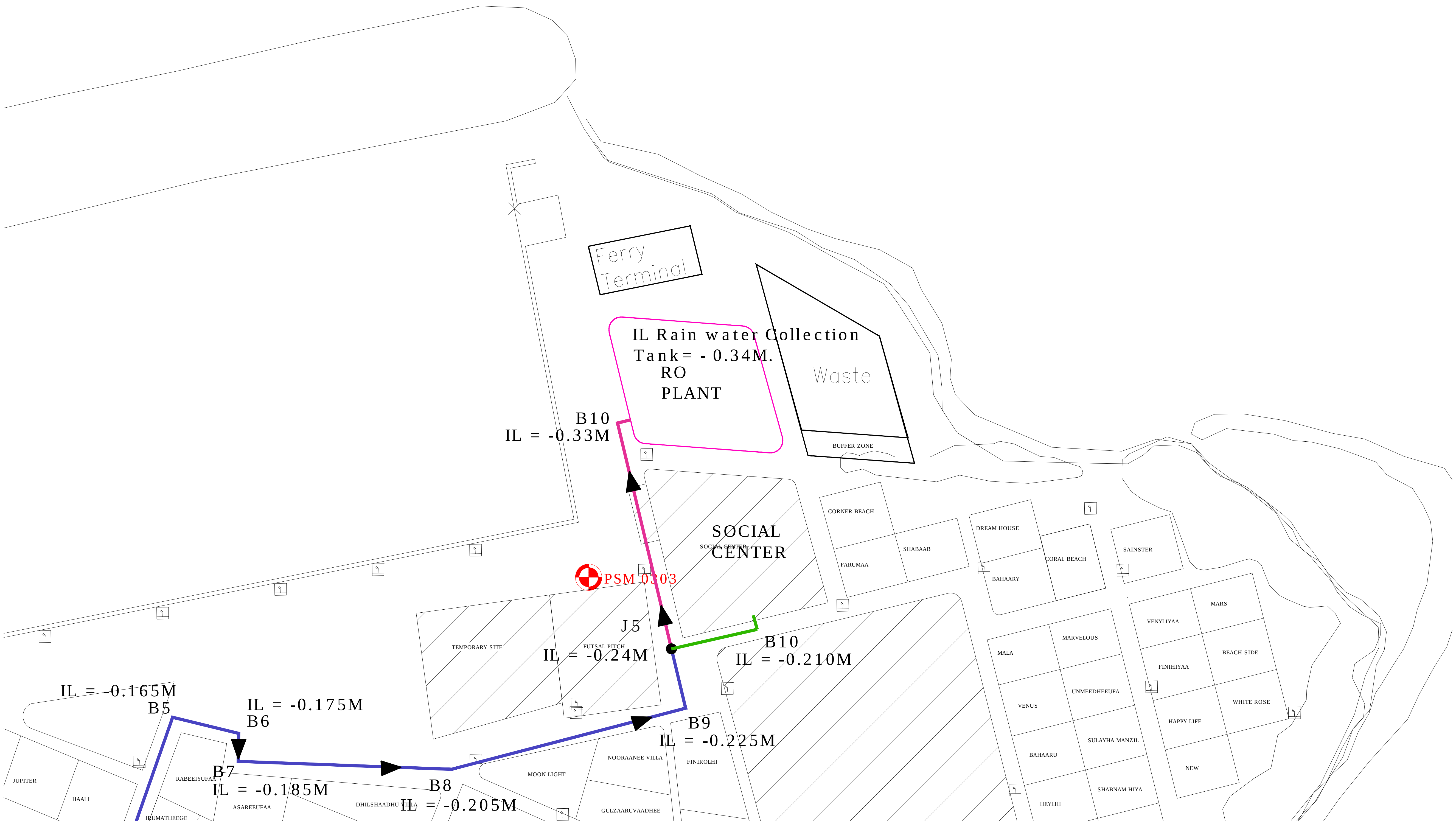
Ferry Terminal
IL Rain water Collection Tank= - 0.34M.
RO PLANT
Waste
BUFFER ZONE
B10
IL = -0.33M
SOCIAL CENTER
SOCIAL CENTER
PSM 0303
J5
IL = -0.24M
B10
IL = -0.210M
TEMPORARY SITE
FUTSAL PITCH
IL = -0.165M
B5
IL = -0.175M
B6
B7
IL = -0.185M
B8
IL = -0.205M
B9
IL = -0.225M
JUPITER
HAALI
RABEEIYUFAA
IRUMATHEEGE
ASAREEUFAA
DHILSHAADHU VILLA
MOON LIGHT
NOORAANEE VILLA
GULZAARUVAADHEE
FINIROLHI
CORNER BEACH
FARUMAA
SHABAAB
DREAM HOUSE
BAHAARY
CORAL BEACH
SAINSTER
MALA
MARVELOUS
VENUS
UNMEEDHEEUFA
BAHAARU
SULAYHA MANZIL
HEYLHI
SHABNAM HIYA
VENYLIYAA
MARS
FINIHIYAA
BEACH SIDE
HAPPY LIFE
WHITE ROSE
NEW

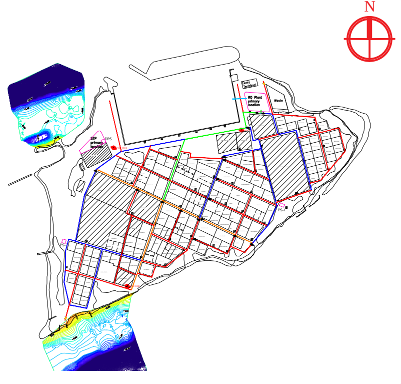

Legend

- Ø160 HDPE Rainwater Flow Pipe
- Ø250 HDPE Rainwater Flow Pipe
- Ø355 HDPE Rainwater Flow Pipe
- ● Junction
- Ø200 HDPE Rainwater Flow Pipe
- Ø280 HDPE Rainwater Flow Pipe

Notes:
1. All levels are shown in meters.
2. All levels are shown from mean sea level.
3. This drawing to be read in conjunction with all other relevant drawing and specifications.
4. All gravity pipes should be HDPE PE100, PN6, SDR26 pipes.
5. All gravity pipes are to be laid as per invert levels indicated. Any change based on site condition should be made based on approval from engineer.

RAINWATER FLOW PIPES

DIAMETER (mm)	LENGTH HDPE (m)	TYPE OF PIPE
160	157	HDPE (PE100,PN6,SDR26)
200	44	
250	61	
280	281	
355	60	
Total	603	

PSM BENCHMARKS

PERMANENT SURVEY MARK PSM 0301
338835.373E, 382648.909N
0.757m From MSL

PERMANENT SURVEY MARK PSM 0302
338812.937E, 382876.671N
0.723m From MSL

PERMANENT SURVEY MARK PSM 0303
339023.490E, 382905.977N
0.658m From MSL

REV. NO.	Date	Revision Description	Drawn	Chkd	Appd.
R00	JUNE 2020	STAGE -1	PD	SBC	SD

Title:
Consultancy Services for Survey, Design and EIA works of Water Supply and Sewerage Facilities in 6 islands, Maldives - Package 5

Sub Title:
Water Supply System in V. Keyodhoo

Client:
Ministry of National Planning, Housing and Infrastructure, Republic of Maldives

EPOCH ASSOCIATES
T: +960 333 3528
E: info@epoch.associates
W: wwww.epoch.associates
A: G. Rosary West,
Husnuheenaa Magu, Male', Maldives

FEEDBACK INFRA
Making Infrastructure Happen

Drawn: F.I.A.
Checked: M.S.S.
Designed: F.I.A.
Approved: I.W.
Date: Sep 2020
SCALE (A3): 1:1000
Project No: EP-WS/2019/05
Rev: R-01
Page: 08

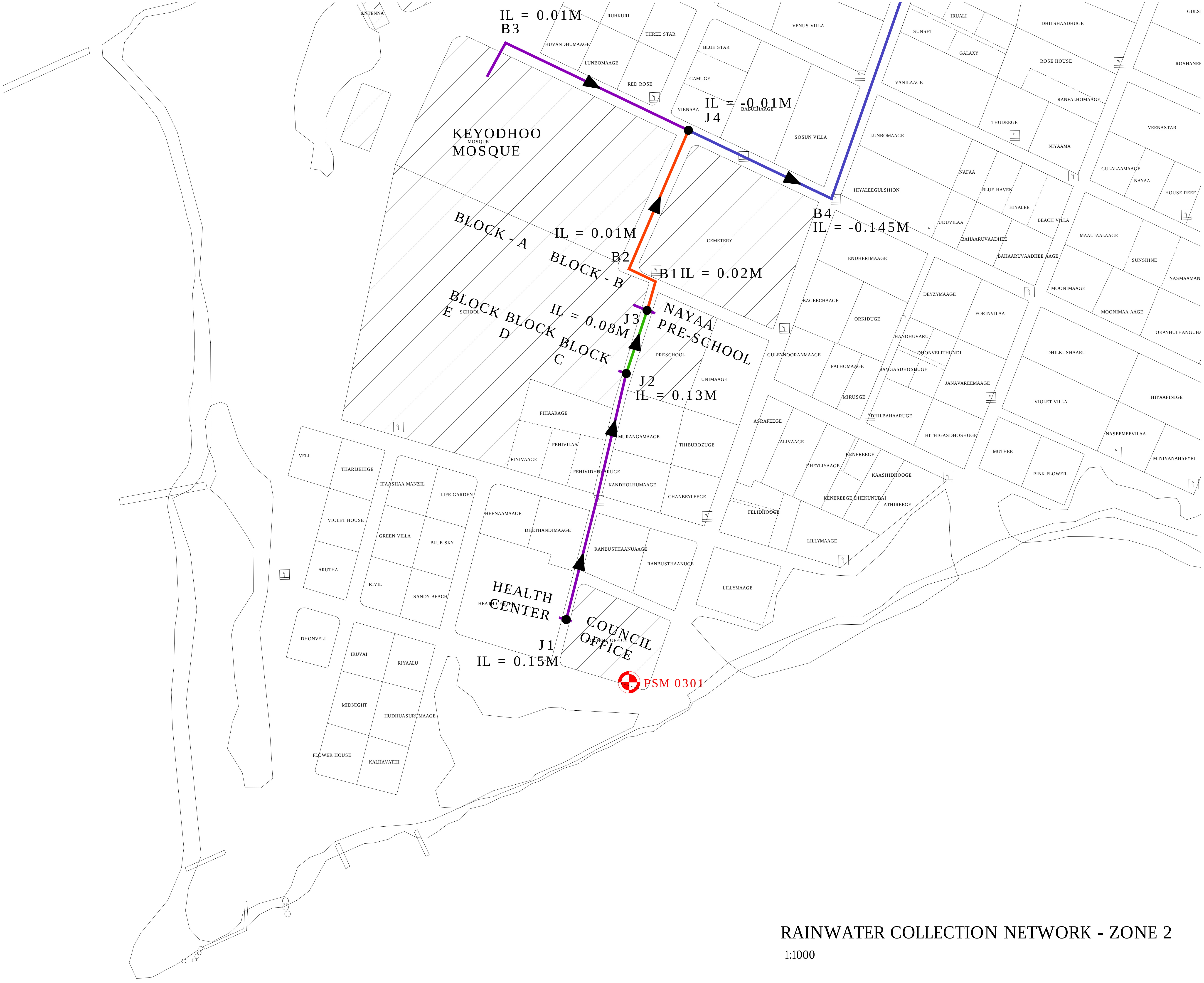
IL = 0.01M
B3
KEYODHOO MOSQUE
MOSQUE
IL = -0.01M
J4
B4
IL = -0.145M
IL = 0.01M
B2
B1 IL = 0.02M
BLOCK - A
BLOCK - B
BLOCK BLOCK D
BLOCK C
BLOCK E
SCHOOL
IL = 0.08M
J3
NAYAA PRE-SCHOOL
PRESCHOOL
J2
IL = 0.13M
HEALTH CENTER
HEALTH CENTER
COUNCIL OFFICE
COUNCIL OFFICE
J1
IL = 0.15M
PSM 0301
ANTENNA
RUHKURI
THREE STAR
HUVANDHUMAAGE
LUNBOMAAGE
RED ROSE
VENUS VILLA
BLUE STAR
GAMUGE
VIENSAA
BABULHAAGE
SOSUN VILLA
IRUALI
SUNSET
GALAXY
DHILSHAADHUGE
VANILAAGE
ROSE HOUSE
RANFALHOMAAGE
THUDEEGE
LUNBOMAAGE
NIYAAMA
VEENASTAR
ROSHANEE
GULALAAMAAGE
NAYAA
HOUSE REEF
NAFAA
BLUE HAVEN
HIYALEE
HIYALEEGULSHION
UDUVILAA
BAHAARUVAADHEE
BEACH VILLA
BAHAARUVAADHEE AAGE
MAAUJAALAAGE
SUNSHINE
NASMAAMAN
MOONIMAAGE
MOONIMAA AAGE
OKAYHULHANGUBA
CEMETERY
ENDHERIMAAGE
BAGEECHAAGE
ORKIDUGE
DEYZYMAAGE
FORINVILAA
HANDHUVARU
DHONVELITHUNDI
JAMGASDHOSHUGE
JANAVAREEMAAGE
DHILKUSHAARU
VIOLET VILLA
HIYAAFINIGE
GULEYNOORANMAAGE
FALHOMAAGE
MIRUSGE
DHILBAHAARUGE
HITHIGASDHOSHUGE
NASEEMEEVILAA
MINIVANAHSEYRI
MUTHEE
PINK FLOWER
UNIMAAGE
ASRAFEEGE
ALIVAAGE
DHEYLIYAAGE
KENEREEGE
KAASHIDHOOGE
KENEREEGE DHEKUNUBAI
ATHIREEGE
FELIDHOOGE
LILLYMAAGE
LILLYMAAGE
FIHAARAGE
FEHIVILAA
FINIVAAGE
FEHIVIDHURUGE
MURANGAMAAGE
THIBUROZUGE
KANDHOLHUMAAGE
CHANBEYLEEGE
VELI
THARIJEHIGE
IFAASHAA MANZIL
LIFE GARDEN
VIOLET HOUSE
GREEN VILLA
BLUE SKY
ARUTHA
RIVIL
SANDY BEACH
HEENAAMAAGE
DHETHANDIMAAGE
RANBUSTHAANUAAGE
RANBUSTHAANUGE
DHONVELI
IRUVAI
RIYAALU
MIDNIGHT
HUDHUASURUMAAGE
FLOWER HOUSE
KALHAVATHI
GULSI

RAINWATER COLLECTION NETWORK - ZONE 2

1:1000

Legend

Ø160 HDPE Rainwater Flow Pipe	Ø200 HDPE Rainwater Flow Pipe
Ø250 HDPE Rainwater Flow Pipe	Ø280 HDPE Rainwater Flow Pipe
Ø355 HDPE Rainwater Flow Pipe	
● Junction	

Notes:
1. All levels are shown in meters.
2. All levels are shown from mean sea level.
3. This drawing to be read in conjunction with all other relevant drawing and specifications.
4. All gravity pipes should be HDPE PE100, PN6, SDR26 pipes.
5. All gravity pipes are to be laid as per invert levels indicated. Any change based on site condition should be made based on approval from engineer.

RAINWATER FLOW PIPES

DIAMETER (mm)	LENGTH HDPE (m)	TYPE OF PIPE
160	157	HDPE (PE100,PN6,SDR26)
200	44	
250	61	
280	281	
355	60	
Total	603	

PSM BENCHMARKS

PERMANENT SURVEY MARK PSM 0301
338835.373E, 382648.909N
0.757m From MSL

PERMANENT SURVEY MARK PSM 0302
338812.937E, 382876.671N
0.723m From MSL

PERMANENT SURVEY MARK PSM 0303
339023.490E, 382905.977N
0.658m From MSL

REV. NO.	Date	Revision Description	Drawn	Chkd	Appd.
R00	JUNE 2020	STAGE -1	PD	SBC	SD

Title:
Consultancy Services for Survey, Design and EIA works of Water Supply and Sewerage Facilities in 6 islands, Maldives - Package 5

Sub Title:
Water Supply System in V. Keyodhoo

Client:
Ministry of National Planning, Housing and Infrastructure, Republic of Maldives

EPOCH ASSOCIATES
T: +960 333 3528
E: info@epoch.associates
W: wwww.epoch.associates
A: G. Rosary West,
Husnuheenaa Magu, Male', Maldives

FEEDBACK INFRA
Making Infrastructure Happen

Drawn:	F.I.A.	Checked:	M.S.S.
Designed:	F.I.A.	Approved:	I.W.
Date:	Sep 2020	SCALE (A3):	1:1000

Project No: EP-WS/2019/05

Rev: R-01

Page: 09

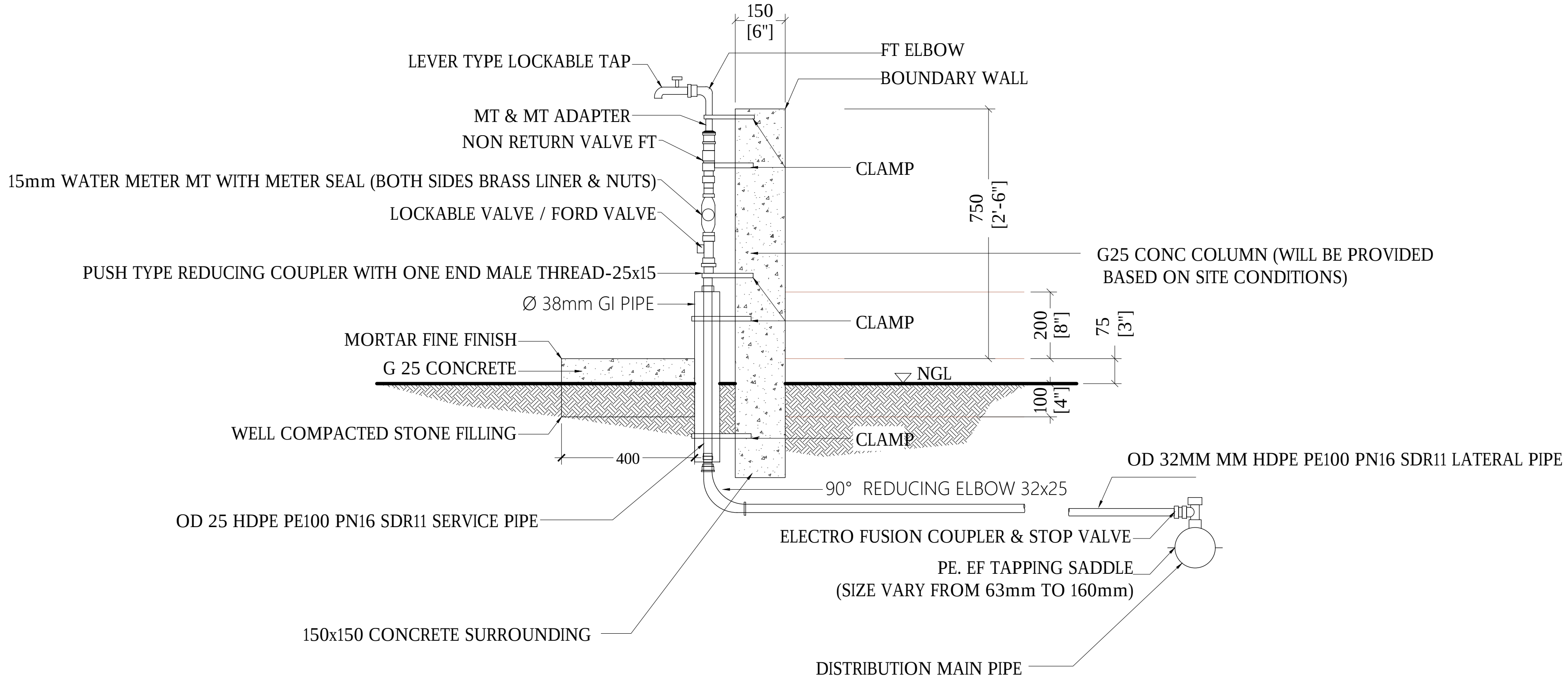
150
[6"]
LEVER TYPE LOCKABLE TAP
FT ELBOW
BOUNDARY WALL
MT & MT ADAPTER
NON RETURN VALVE FT
15mm WATER METER MT WITH METER SEAL (BOTH SIDES BRASS LINER & NUTS)
CLAMP
750
[2'-6"]
LOCKABLE VALVE / FORD VALVE
G25 CONC COLUMN (WILL BE PROVIDED BASED ON SITE CONDITIONS)
PUSH TYPE REDUCING COUPLER WITH ONE END MALE THREAD-25x15
Ø 38mm GI PIPE
CLAMP
200
[8"]
75
[3"]
MORTAR FINE FINISH
G 25 CONCRETE
NGL
100
[4"]
WELL COMPACTED STONE FILLING
CLAMP
400
OD 32MM MM HDPE PE100 PN16 SDR11 LATERAL PIPE
90° REDUCING ELBOW 32x25
OD 25 HDPE PE100 PN16 SDR11 SERVICE PIPE
ELECTRO FUSION COUPLER & STOP VALVE
PE. EF TAPPING SADDLE
(SIZE VARY FROM 63mm TO 160mm)
150x150 CONCRETE SURROUNDING
DISTRIBUTION MAIN PIPE

WATER SUPPLY HOUSE CONNECTION DETAILS

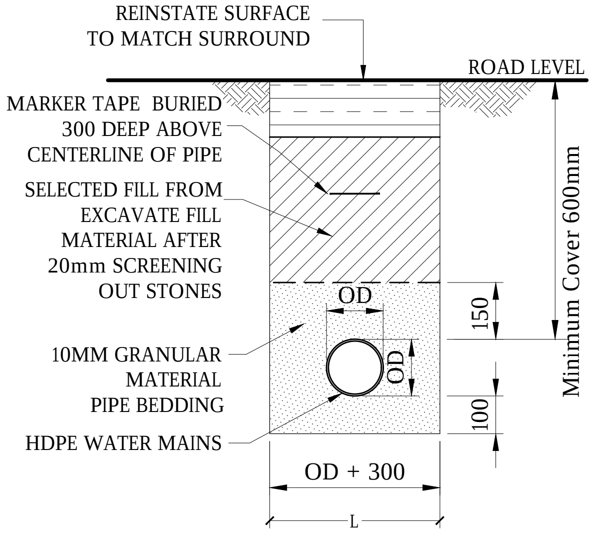
REINSTATE SURFACE
TO MATCH SURROUND
ROAD LEVEL
MARKER TAPE BURIED
300 DEEP ABOVE
CENTERLINE OF PIPE
SELECTED FILL FROM
EXCAVATE FILL
MATERIAL AFTER
20mm SCREENING
OUT STONES
OD
150
Minimum Cover 600mm
10MM GRANULAR
MATERIAL
PIPE BEDDING
OD
100
HDPE WATER MAINS
OD + 300
L

TRENCH & BEDDING DETAILS

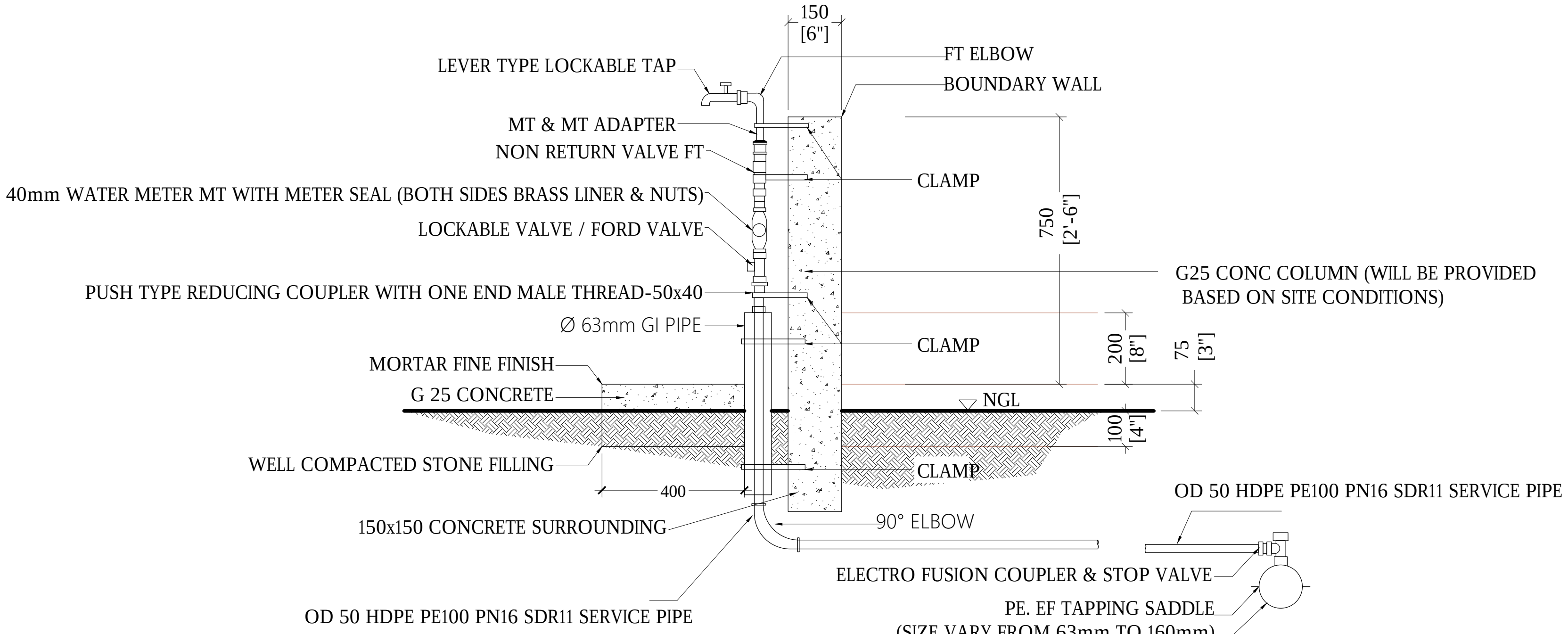
150
[6"]
LEVER TYPE LOCKABLE TAP
FT ELBOW
BOUNDARY WALL
MT & MT ADAPTER
NON RETURN VALVE FT
40mm WATER METER MT WITH METER SEAL (BOTH SIDES BRASS LINER & NUTS)
CLAMP
750
[2'-6"]
LOCKABLE VALVE / FORD VALVE
G25 CONC COLUMN (WILL BE PROVIDED BASED ON SITE CONDITIONS)
PUSH TYPE REDUCING COUPLER WITH ONE END MALE THREAD-50x40
Ø 63mm GI PIPE
CLAMP
200
[8"]
75
[3"]
MORTAR FINE FINISH
G 25 CONCRETE
NGL
100
[4"]
WELL COMPACTED STONE FILLING
CLAMP
400
OD 50 HDPE PE100 PN16 SDR11 SERVICE PIPE
150x150 CONCRETE SURROUNDING
90° ELBOW
ELECTRO FUSION COUPLER & STOP VALVE
OD 50 HDPE PE100 PN16 SDR11 SERVICE PIPE
PE. EF TAPPING SADDLE
(SIZE VARY FROM 63mm TO 160mm)
DISTRIBUTION MAIN PIPE

WATER SUPPLY COMMERCIAL/INSTITUTIONAL CONNECTION DETAILS

WATER SUPPLY HOUSE AND COMMERCIAL/INSTITUTIONAL CONNECTIONS

1:20

Legend

Notes:
- Location of house connection meters to be determined based on house connection survey.
- Commercial connections for public buildings and industrial buildings to be provided as per approved connections list from island council.

REV. NO.	Date	Revision Description	Drawn	Chkd	Appd.
R00	JUNE 2020	STAGE -1	PD	SBC	SD

Title:
Consultancy Services for Survey, Design and EIA works of Water Supply and Sewerage Facilities in 6 islands, Maldives - Package 5

Sub Title:
Water Supply System in V. Keyodhoo

Client:
Ministry of National Planning, Housing and Infrastructure, Republic of Maldives

EPOCH ASSOCIATES
T: +960 333 3528
E: info@epoch.associates
W: wwww.epoch.associates
A: G. Rosary West,
Husnuheenaa Magu, Male', Maldives

FEEDBACK INFRA

Drawn:	F.I.A.	Checked:	M.S.S.
Designed:	F.I.A.	Approved:	I.W.
Date:	Sep 2020	SCALE (A3):	1:20
Project No:	EP-WS/2019/05		
Rev:	R-01	Page:	W-01

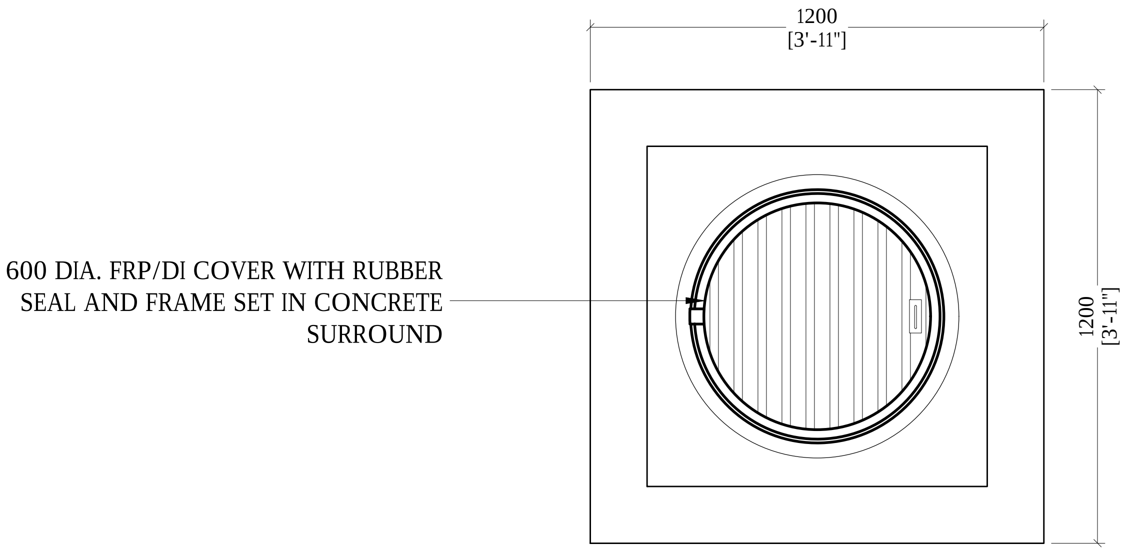
1200
[3'-11"]
1200
[3'-11"]
600 DIA. FRP/DI COVER WITH RUBBER SEAL AND FRAME SET IN CONCRETE SURROUND

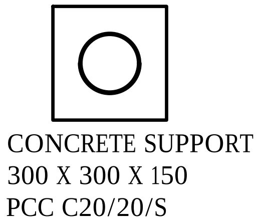
CONCRETE SUPPORT
300 X 300 X 150
PCC C20/20/S

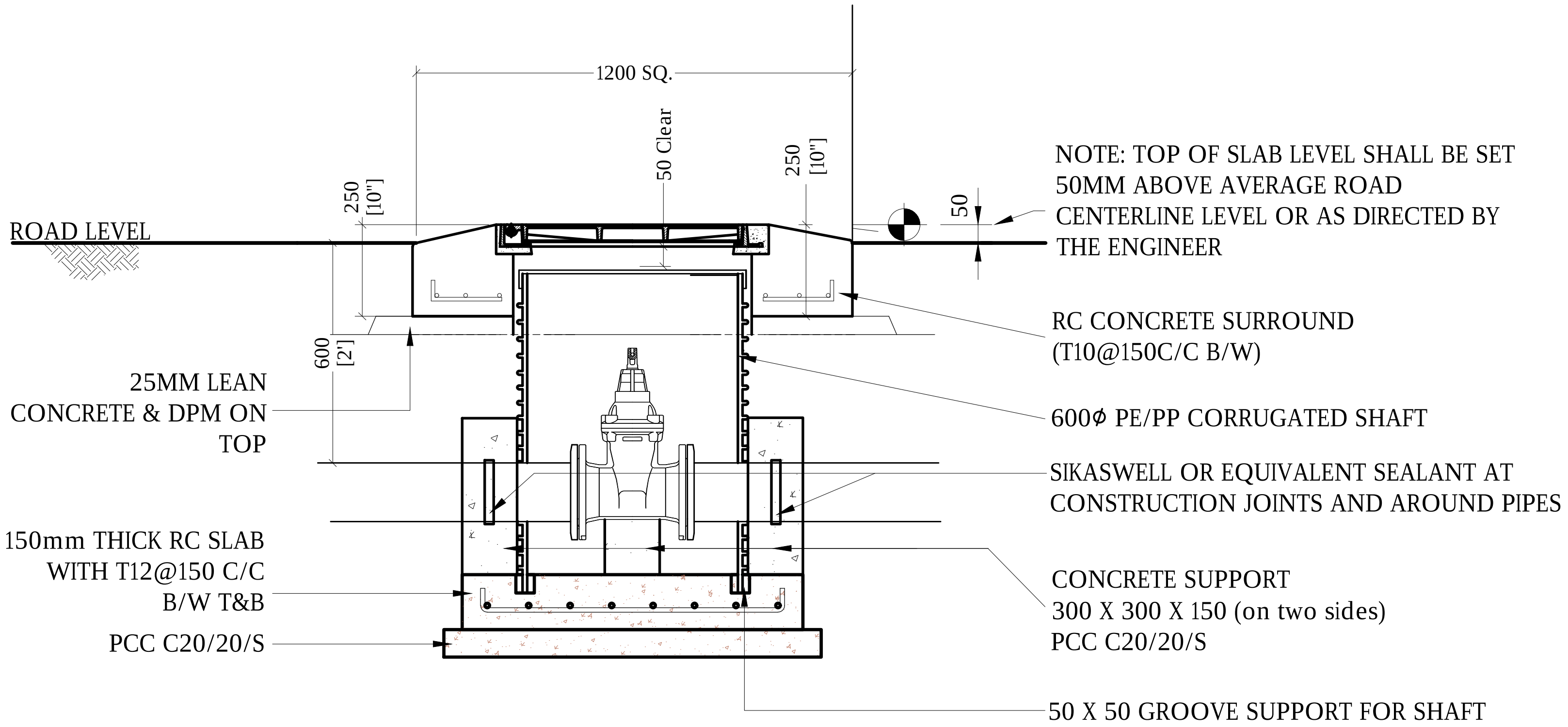
1200 SQ.
50 Clear
250
[10"]
250
[10"]
50
600
[2']
ROAD LEVEL
NOTE: TOP OF SLAB LEVEL SHALL BE SET 50MM ABOVE AVERAGE ROAD CENTERLINE LEVEL OR AS DIRECTED BY THE ENGINEER
RC CONCRETE SURROUND (T10@150C/C B/W)
25MM LEAN CONCRETE & DPM ON TOP
600∅ PE/PP CORRUGATED SHAFT
SIKASWELL OR EQUIVALENT SEALANT AT CONSTRUCTION JOINTS AND AROUND PIPES
150mm THICK RC SLAB WITH T12@150 C/C B/W T&B
CONCRETE SUPPORT 300 X 300 X 150 (on two sides) PCC C20/20/S
PCC C20/20/S
50 X 50 GROOVE SUPPORT FOR SHAFT

SECTION - VALVE CHAMBER

VALVE CHAMBER DETAILS

1:20

Legend

Notes:
-All structural concrete shall be of grade C25.
-All castings shall be done using sulphate resistant portland cement to BS 4027:1996.
-All structural reinforcement shall be epoxy coating of non-pre-stressed reinforcement to ASTM-A775/A775M.
-A cover of 75mm should be given for all reinforcements.

R00	JUNE 2020	STAGE -1	PD	SBC	SD
REV. NO.	Date	Revision Description	Drawn	Chkd	Appd.

Title:
Consultancy Services for Survey, Design and EIA works of Water Supply and Sewerage Facilities in 6 islands, Maldives - Package 5

Sub Title:
Water Supply System in V. Keyodhoo

Client:
Ministry of National Planning, Housing and Infrastructure, Republic of Maldives

EPOCH ASSOCIATES
T: +960 333 3528
E: info@epoch.associates
W: wwww.epoch.associates
A: G. Rosary West,
Husnuheenaa Magu, Male', Maldives

FEEDBACK INFRA
Making Infrastructure Happen

Drawn: F.I.A.
Checked: M.S.S.
Designed: F.I.A.
Approved: I.W.
Date: Sep 2020
SCALE (A3): 1:20
Project No: EP-WS/2019/05
Rev: R-01
Page: W-02

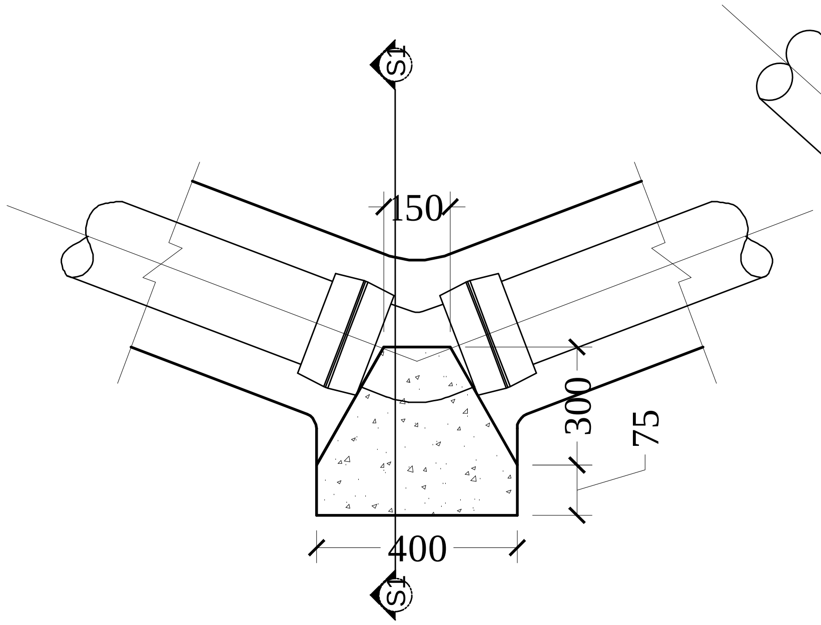
S1
150
300
75
400
S1

HORIZONTAL 45° BEND
NTS

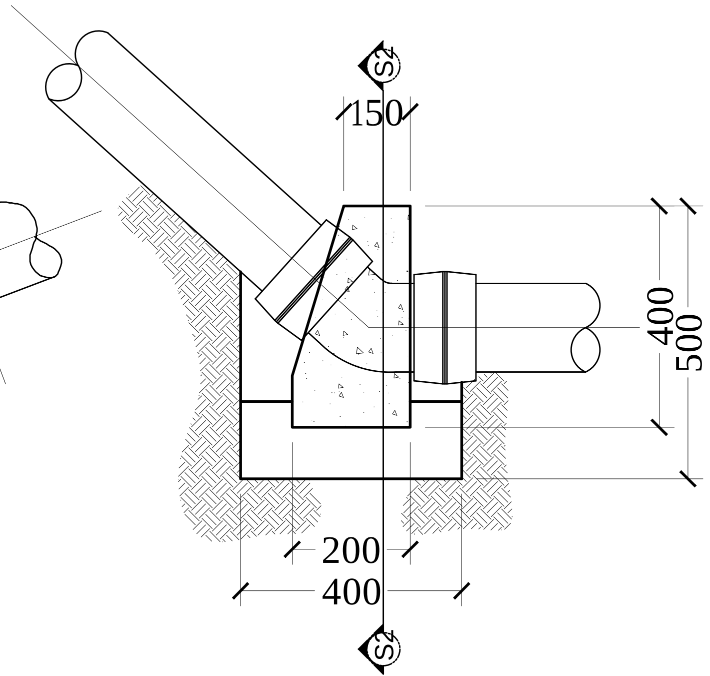
S2
150
400
500
200
400
S2

VERTICAL 45° BEND
NTS

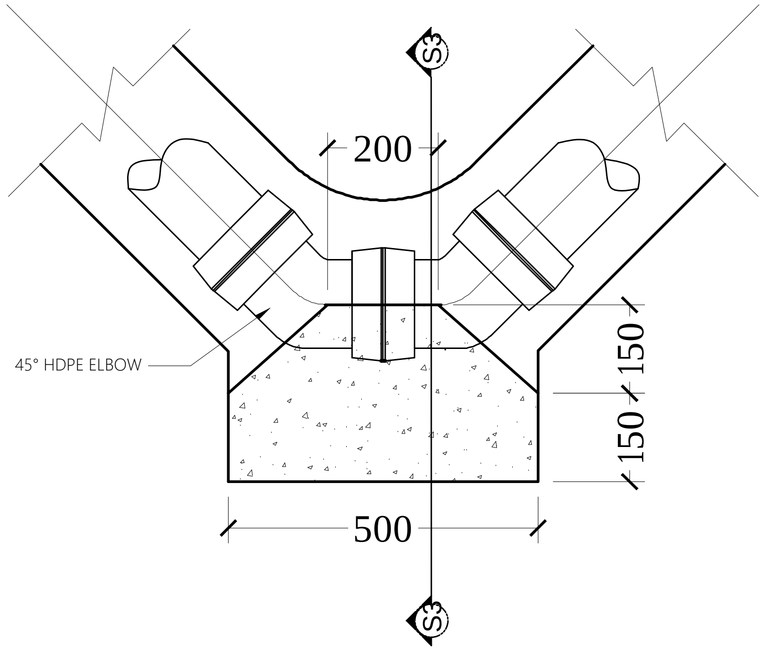
S3
200
45° HDPE ELBOW
150
150
500
S3

HORIZONTAL 90° BEND
NTS

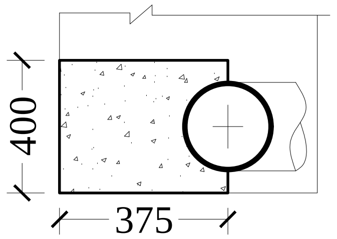

SECTION S1-S1
NTS

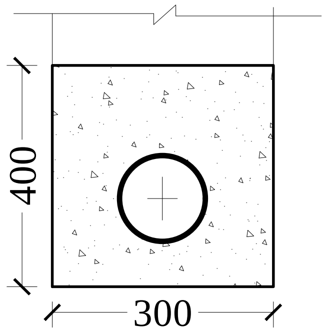

SECTION S2-S2
NTS

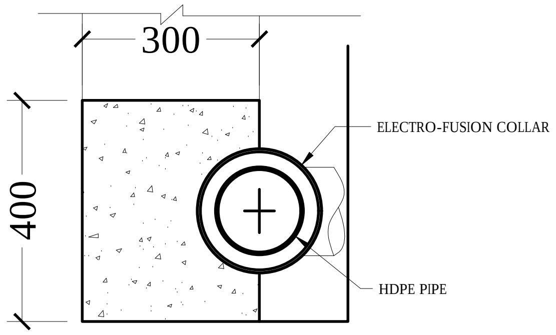
300
400
ELECTRO-FUSION COLLAR
HDPE PIPE

SECTION S3-S3
NTS

THRUST BLOCK DETAILS
NTS

Legend

Notes:
-All structural concrete shall be of grade C25.
-All castings shall be done using sulphate resistant portland cement to BS 4027:1996.

R00	JUNE 2020	STAGE -1	PD	SBC	SD
REV. NO.	Date	Revision Description	Drawn	Chkd	Appd.

Title:
Consultancy Services for Survey, Design and EIA works of Water Supply and Sewerage Facilities in 6 islands, Maldives - Package 5

Sub Title:
Water Supply System in V. Keyodhoo

Client:
Ministry of National Planning, Housing and Infrastructure, Republic of Maldives

EPOCH ASSOCIATES
T: +960 333 3528
E: info@epoch.associates
W: wwww.epoch.associates
A: G. Rosary West,
Husnuheenaa Magu, Male', Maldives

FEEDBACK INFRA
Making Infrastructure Happen

Drawn: F.I.A.
Checked: M.S.S.
Designed: F.I.A.
Approved: I.W.
Date: Sep 2020
SCALE (A3): NTS
Project No: EP-WS/2019/05
Rev: R-01
Page: W-03

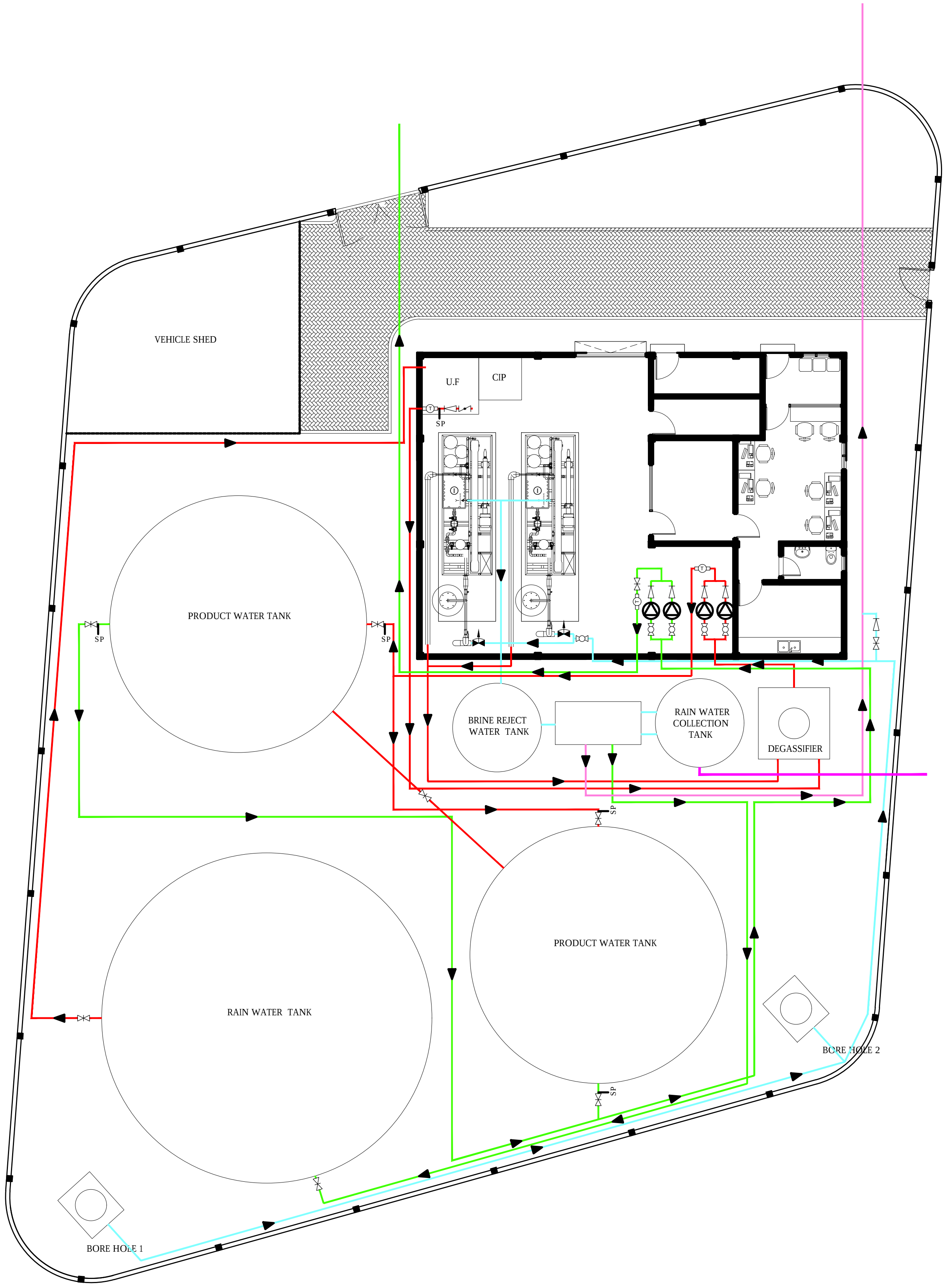

PUMP DETAILS

Borehole Pump : 2 Nos
- Flow (Q) = 16.7m3/hr
- Head (H) = 50 m

High Pressure Pump : 2 Nos
- Flow (Q) = 8.40 m3/hr
- Pressure Range = 45-85 bar

Transfer Pump : 2 Nos
- Flow (Q) = 7.50 m3/hr
- Head (H) = 16 m

Distribution Pump Set : 2 Nos
- Flow (Q) = 12.5 m3/hr
- Head (H) = 35 m

Brine Pump : 2 Nos
- Flow (Q) = 11.7 m3/hr
- Head (H) = 10 m

Rain Water lift Well Pump : 2 Nos
- Flow (Q) = 65.1 m3/hr
- Head (H) = 17m

UF Feed Pump : 2 Nos
- Flow (Q) = 2.5 m3/hr
- Head (H) = 35 m

⋈	Gate Valve
▷	Check Valve
Ⓣ	Totalizer
◬	Pump
⧓	Closed Gate Valve
SP	Sampling Point
⊘	Butterfly Valve
⋈	Ball Valve

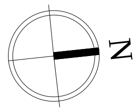

INTERNAL PIPE LAYOUT

1:200

Legend

—	Ø90 HDPE (PE100, PN10, SDR17)
—	Ø63 HDPE (PE100, PN10, SDR17)
—	Ø110 HDPE (PE100, PN10, SDR17)
—	Ø160 HDPE (PE100, P10, SDR17)
—	Ø110 HDPE (OUTFALL PE100, PN16, SDR11)
—	Ø355 HDPE (RAINWATER PE100, PN6, SDR26)

Notes:

- All Pump sizes are based on 15 year demands.
- Rainwater collection Pump sizing is done considering Maximum Rainfall intensity of 50mm/hr.
- UF feed pump will be subject to Approved UF Plant suppliers approval.
- Both Feed Pump and High pressure pump capacity will need to be approved by the approved RO plant Supplier. The working pressure range will be established based on the approved suppliers requirements.
- Distribution Pump set will have Variable Frequency Drive.
- All pump control float switches and automated valves will be provided.
- Contractor to produce shop drawings of interior layout based on site condition for approval by engineer.

REV. NO.	Date	Revision Description	Drawn	Chkd	Appd.
R00	JUNE 2020	STAGE -1	PD	SBC	SD

Title:
Consultancy Services for Survey, Design and EIA works of Water Supply and Sewerage Facilities in 6 islands, Maldives - Package 5

Sub Title:
Water Supply System in V. Keyodhoo

Client:
Ministry of National Planning, Housing and Infrastructure, Republic of Maldives

T: +960 333 3528
E: info@epoch.associates
W: wwww.epoch.associates
A: G. Rosary West,
Husnuheenaa Magu, Male', Maldives

Drawn:	F.I.A.	Checked:	M.S.S.
Designed:	F.I.A.	Approved:	I.W.
Date:	Sep 2020	SCALE (A3):	NTS

Project No: EP-WS/2019/05

Rev: R-01

Page: W-04

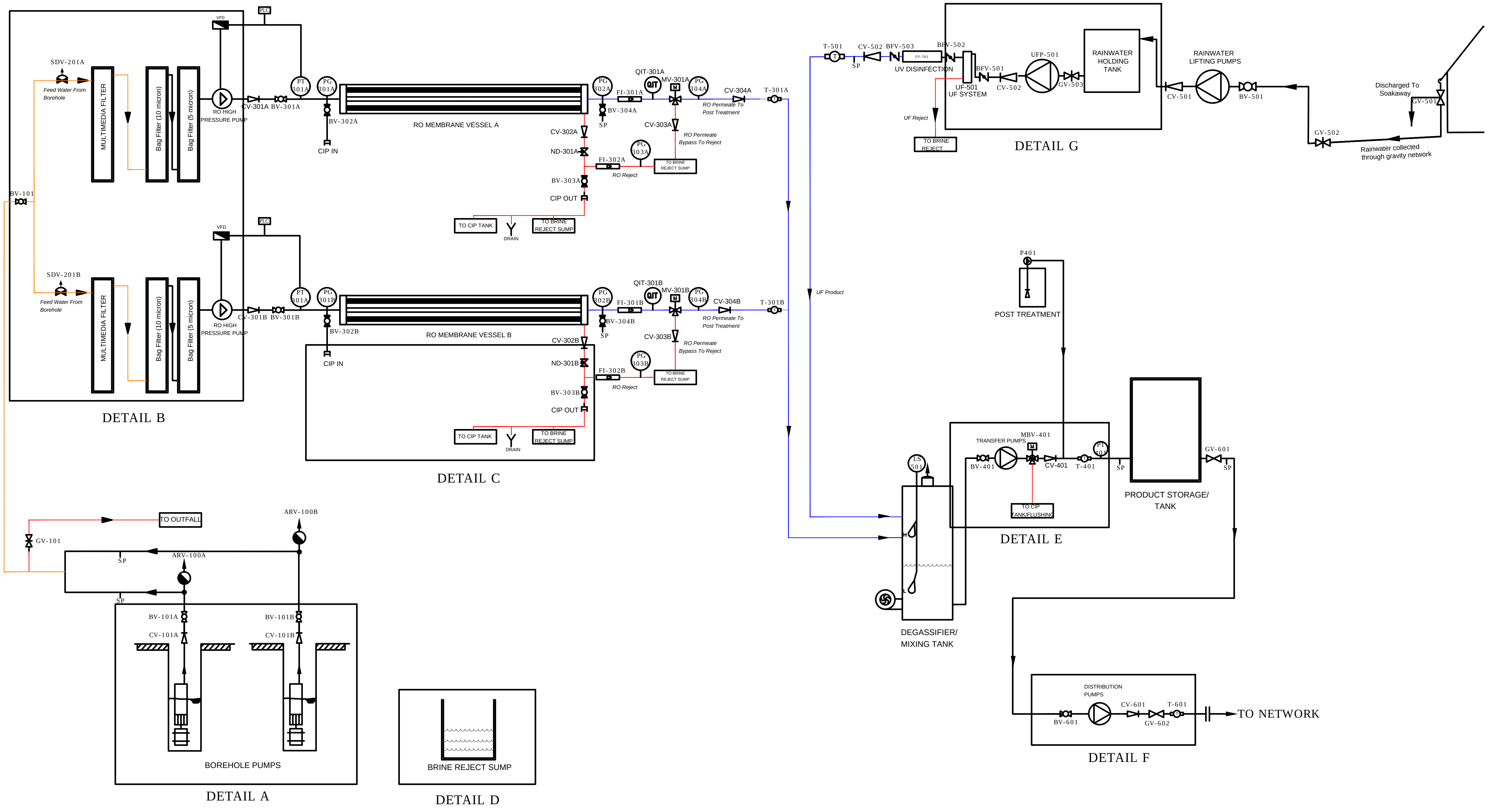
PLC
VFD
SDV-201A
Feed Water From Borehole
MULTIMEDIA FILTER
Bag Filter (10 micron)
Bag Filter (5 micron)
RO HIGH PRESSURE PUMP
CV-301A
BV-301A
PT 301A
PG 301A
BV-302A
CIP IN
RO MEMBRANE VESSEL A
PG 302A
FI-301A
BV-304A
SP
QIT-301A
QIT
MV-301A
M
PG 304A
CV-304A
T-301A
RO Permeate To Post Treatment
CV-302A
ND-301A
CV-303A
RO Permeate Bypass To Reject
PG 303A
FI-302A
RO Reject
TO BRINE REJECT SUMP
BV-303A
CIP OUT
TO CIP TANK
TO BRINE REJECT SUMP
DRAIN
BV-101
DETAIL B
SDV-201B
Feed Water From Borehole
MULTIMEDIA FILTER
Bag Filter (10 micron)
Bag Filter (5 micron)
RO HIGH PRESSURE PUMP
CV-301B
BV-301B
PT 301A
PG 301B
BV-302B
CIP IN
RO MEMBRANE VESSEL B
PG 302B
FI-301B
BV-304B
SP
QIT-301B
MV-301B
PG 304B
CV-304B
T-301B
RO Permeate To Post Treatment
CV-302B
ND-301B
CV-303B
RO Permeate Bypass To Reject
PG 303B
FI-302B
RO Reject
TO BRINE REJECT SUMP
BV-303B
CIP OUT
TO CIP TANK
TO BRINE REJECT SUMP
DRAIN
DETAIL C
UF Product
T-501
SP
CV-502
BFV-503
UV-501
UV DISINFECTION
BFV-502
UF-501
UF SYSTEM
BFV-501
CV-502
UFP-501
GV-503
RAINWATER HOLDING TANK
UF Reject
TO BRINE REJECT
DETAIL G
RAINWATER LIFTING PUMPS
CV-501
BV-501
Discharged To Soakaway
GV-501
GV-502
Rainwater collected through gravity network
P401
POST TREATMENT
LS 501
H
L
DEGASSIFIER/ MIXING TANK
TRANSFER PUMPS
MBV-401
M
BV-401
CV-401
T-401
PT 401
SP
TO CIP TANK/FLUSHING
DETAIL E
PRODUCT STORAGE/ TANK
GV-601
SP
TO OUTFALL
GV-101
ARV-100B
ARV-100A
SP
SP
BV-101A
CV-101A
BV-101B
CV-101B
BOREHOLE PUMPS
DETAIL A
BRINE REJECT SUMP
DETAIL D
DISTRIBUTION PUMPS
BV-601
CV-601
GV-602
T-601
TO NETWORK
DETAIL F

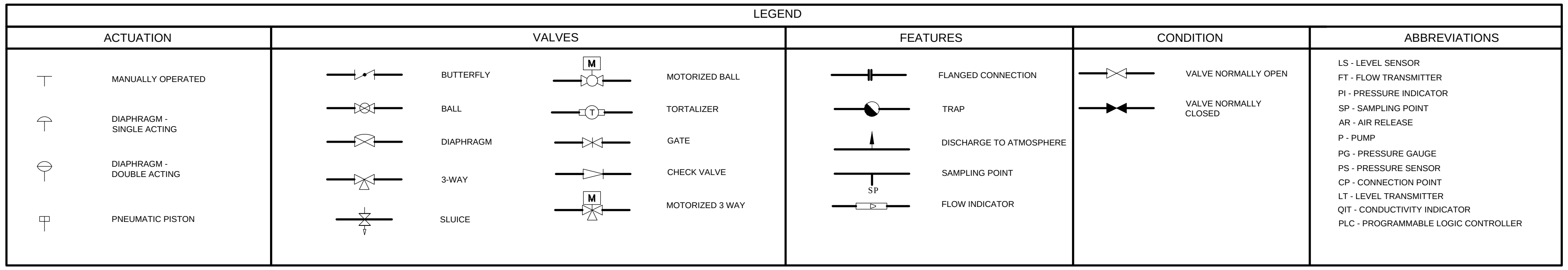
LEGEND
ACTUATION
MANUALLY OPERATED
DIAPHRAGM - SINGLE ACTING
DIAPHRAGM - DOUBLE ACTING
PNEUMATIC PISTON
VALVES
BUTTERFLY
BALL
DIAPHRAGM
3-WAY
SLUICE
M
MOTORIZED BALL
T
TORTALIZER
GATE
CHECK VALVE
M
MOTORIZED 3 WAY
FEATURES
FLANGED CONNECTION
TRAP
DISCHARGE TO ATMOSPHERE
SP
SAMPLING POINT
FLOW INDICATOR
CONDITION
VALVE NORMALLY OPEN
VALVE NORMALLY CLOSED
ABBREVIATIONS

LS - LEVEL SENSOR
FT - FLOW TRANSMITTER
PI - PRESSURE INDICATOR
SP - SAMPLING POINT
AR - AIR RELEASE
P - PUMP
PG - PRESSURE GAUGE
PS - PRESSURE SENSOR
CP - CONNECTION POINT
LT - LEVEL TRANSMITTER
QIT - CONDUCTIVITY INDICATOR
PLC - PROGRAMMABLE LOGIC CONTROLLER

IWRM PLANT P&I OVERVIEW

NTS

N

Legend

FEED LINE
REJECT LINE
PRODUCT LINE

Note:

- CPVC pipe with PN10 rating to be used for the internal pipeline of the plant except for high pressure area (HPP to MV).
- From HPP to MV SS316 piping to be used.
- CPVC pipe with PN16 rating to be used for pipe fittings.
- CPVC pipe with SDR ratio 17 ratio to be used for network.
- HPP used to have a self cooled radial piston.
- CF filters to have a plastic housing with SS304 bolt fittings at connections.
- MM filters to be sized with 32" height by 7" diameter housing.
- Borehole Pumps set to include Variable Frequency Drive (VFD)

R00	JUNE 2020	STAGE -1	PD	SBC	SD
REV. NO.	Date	Revision Description	Drawn	Chkd	Appd.

Title:
Consultancy Services for Survey, Design and EIA works of Water Supply and Sewerage Facilities in 6 islands, Maldives - Package 5

Sub Title:
Water Supply System in V. Keyodhoo

Client:
Ministry of National Planning, Housing and Infrastructure, Republic of Maldives

EPOCH ASSOCIATES
T: +960 333 3528
E: info@epoch.associates
W: wwww.epoch.associates
A: G. Rosary West,
Husnuheenaa Magu, Male', Maldives

FEEDBACK INFRA
Making Infrastructure Happen

Drawn:	F.I.A.	Checked:	M.S.S.
Designed:	F.I.A.	Approved:	I.W.
Date:	Sep 2020	SCALE (A3):	NTS

Project No: EP-WS/2019/05

Rev: R-01

Page: W-05

N

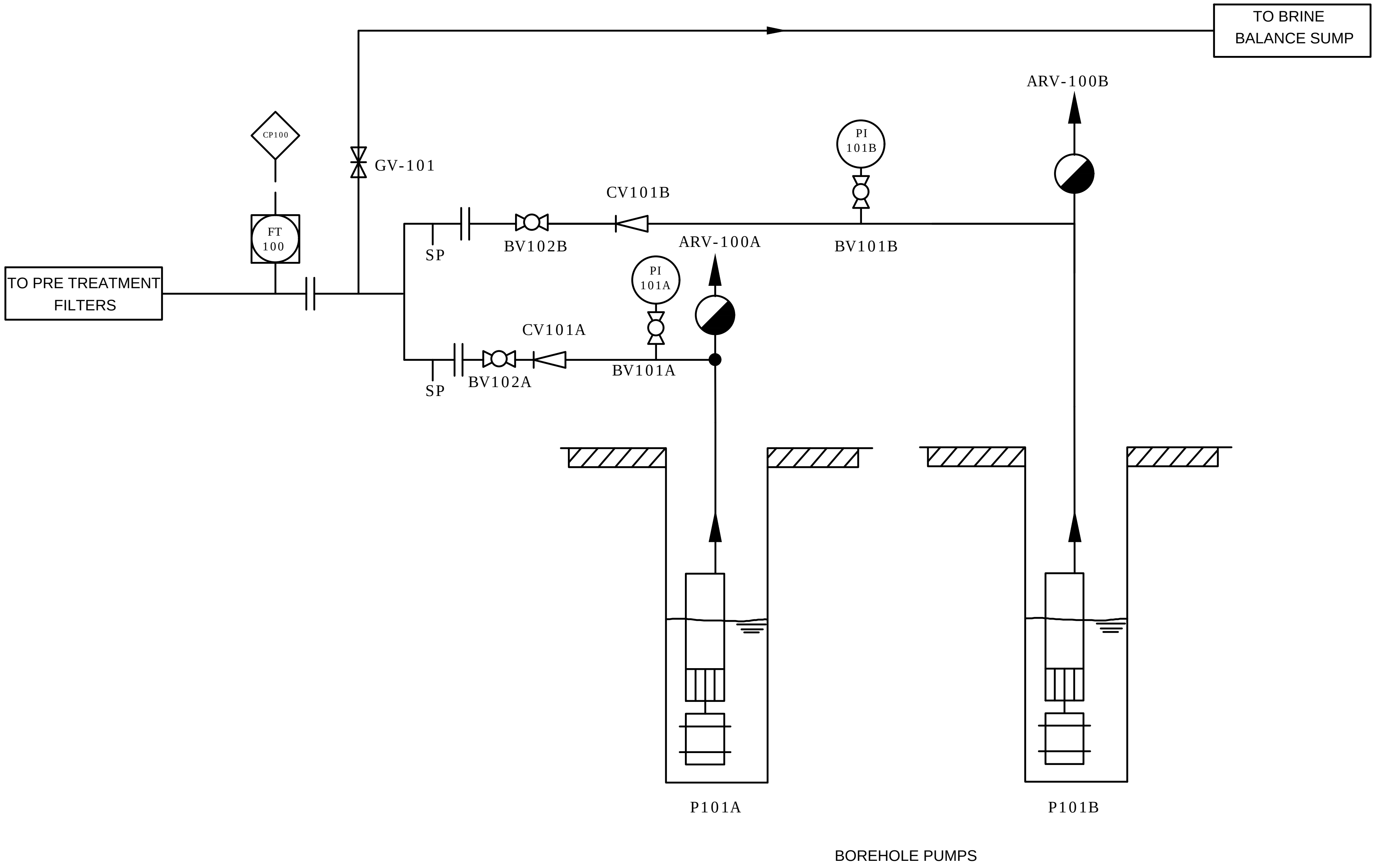
TO BRINE
BALANCE SUMP
ARV-100B
CP100
GV-101
PI
101B
CV101B
FT
100
SP
BV102B
ARV-100A
BV101B
TO PRE TREATMENT
FILTERS
PI
101A
CV101A
SP
BV102A
BV101A
P101A
P101B
BOREHOLE PUMPS

DETAIL A

Legend

Note:
- Borehole pumps to be controlled by Variable Frequency Drive (VFD)

REV. NO.	Date	Revision Description	Drawn	Chkd	Appd.
R00	JUNE 2020	STAGE -1	PD	SBC	SD

LEGEND

ACTUATION	VALVES		FEATURES	CONDITION
MANUALLY OPERATED	BUTTERFLY	MOTORIZED BALL	FLANGED CONNECTION	VALVE NORMALLY OPEN
DIAPHRAGM - SINGLE ACTING	BALL	TORTALIZER	TRAP	VALVE NORMALLY CLOSED
DIAPHRAGM - DOUBLE ACTING	DIAPHRAGM	GATE	DISCHARGE TO ATMOSPHERE	
PNEUMATIC PISTON	3-WAY	CHECK VALVE	SP SAMPLING POINT	
	SLUICE	MOTORIZED 3 WAY	FLOW INDICATOR	

ABBREVIATIONS

- LS - LEVEL SENSOR
- FT - FLOW TRANSMITTER
- PI - PRESSURE INDICATOR
- SP - SAMPLING POINT
- AR - AIR RELEASE
- P - PUMP
- PG - PRESSURE GAUGE
- PS - PRESSURE SENSOR
- CP - CONNECTION POINT
- LT - LEVEL TRANSMITTER
- QIT - CONDUCTIVITY INDICATOR
- PLC - PROGRAMMABLE LOGIC CONTROLLER

IWRM PLANT P&I DETAIL A

NTS

Title:
Consultancy Services for Survey, Design and EIA works of Water Supply and Sewerage Facilities in 6 islands, Maldives - Package 5

Sub Title:
Water Supply System in V. Keyodhoo

Client:
Ministry of National Planning, Housing and Infrastructure, Republic of Maldives

EPOCH ASSOCIATES
T: +960 333 3528
E: info@epoch.associates
W: wwww.epoch.associates
A: G. Rosary West,
Husnuheenaa Magu, Male', Maldives

FEEDBACK INFRA
Making Infrastructure Happen

Drawn: F.I.A.	Checked: M.S.S.
Designed: F.I.A.	Approved: I.W.
Date: Sep 2020	SCALE (A3): NTS

Project No: EP-WS/2019/05

Rev: R-01

Page: W-06

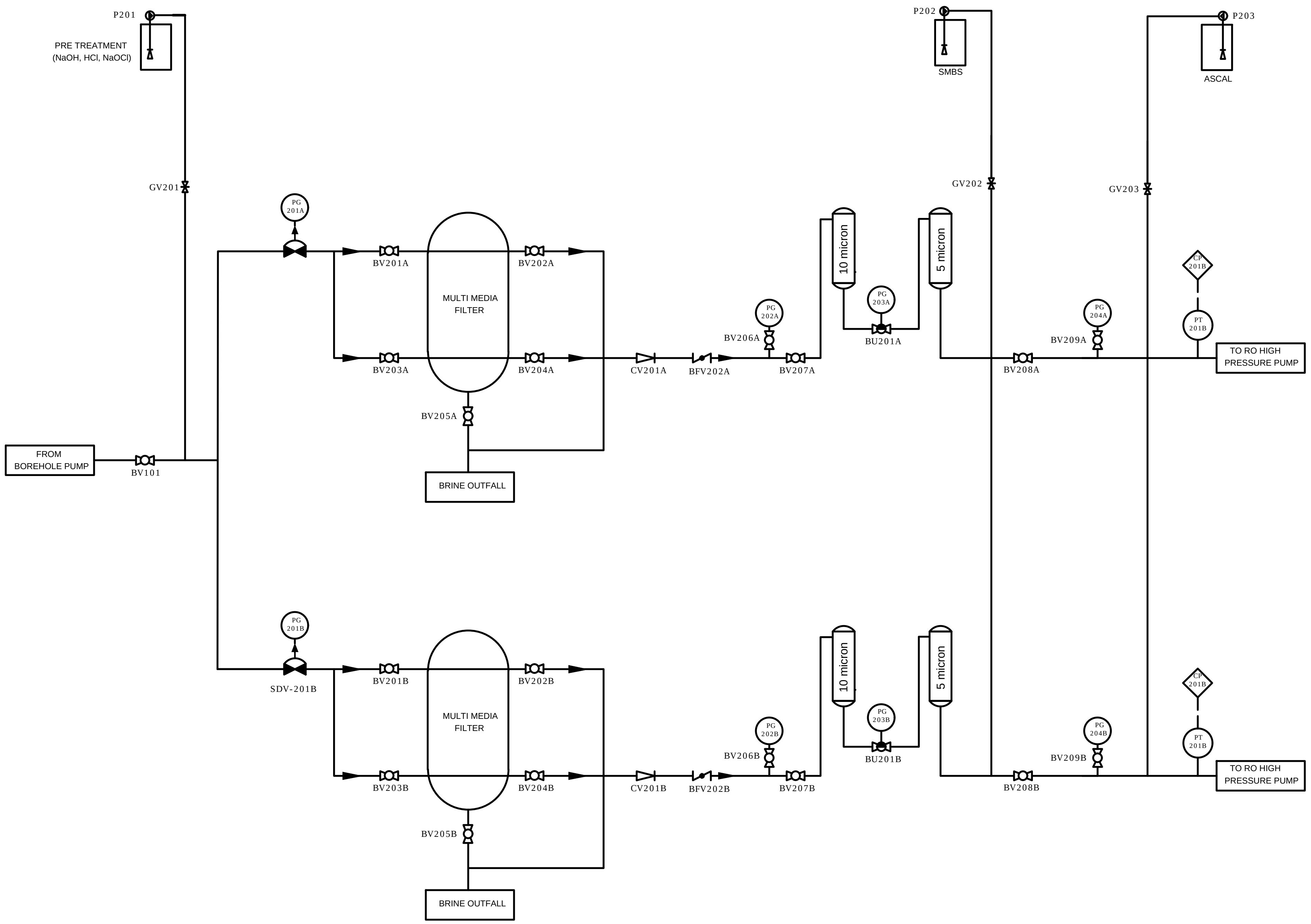
P201
PRE TREATMENT
(NaOH, HCl, NaOCl)
GV201
PG 201A
BV201A
BV202A
MULTI MEDIA FILTER
BV203A
BV204A
BV205A
BRINE OUTFALL
FROM BOREHOLE PUMP
BV101
CV201A
BFV202A
PG 202A
BV206A
BV207A
10 micron
PG 203A
BU201A
5 micron
P202
SMBS
GV202
BV208A
PG 204A
BV209A
P203
ASCAL
GV203
CP 201B
PT 201B
TO RO HIGH PRESSURE PUMP
PG 201B
SDV-201B
BV201B
BV202B
MULTI MEDIA FILTER
BV203B
BV204B
BV205B
BRINE OUTFALL
CV201B
BFV202B
PG 202B
BV206B
BV207B
10 micron
PG 203B
BU201B
5 micron
BV208B
PG 204B
BV209B
CP 201B
PT 201B
TO RO HIGH PRESSURE PUMP

DETAIL B

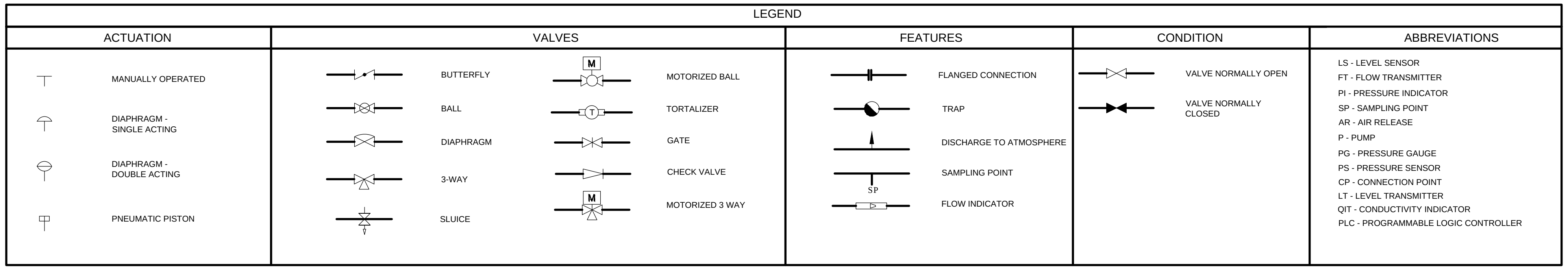
LEGEND
ACTUATION
VALVES
FEATURES
CONDITION
ABBREVIATIONS
MANUALLY OPERATED
DIAPHRAGM - SINGLE ACTING
DIAPHRAGM - DOUBLE ACTING
PNEUMATIC PISTON
BUTTERFLY
BALL
DIAPHRAGM
3-WAY
SLUICE
M
MOTORIZED BALL
T
TORTALIZER
GATE
CHECK VALVE
M
MOTORIZED 3 WAY
FLANGED CONNECTION
TRAP
DISCHARGE TO ATMOSPHERE
SP
SAMPLING POINT
FLOW INDICATOR
VALVE NORMALLY OPEN
VALVE NORMALLY CLOSED
LS - LEVEL SENSOR
FT - FLOW TRANSMITTER
PI - PRESSURE INDICATOR
SP - SAMPLING POINT
AR - AIR RELEASE
P - PUMP
PG - PRESSURE GAUGE
PS - PRESSURE SENSOR
CP - CONNECTION POINT
LT - LEVEL TRANSMITTER
QIT - CONDUCTIVITY INDICATOR
PLC - PROGRAMMABLE LOGIC CONTROLLER

IWRM PLANT P&I DETAIL B

NTS

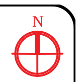

Legend

Note:
- SMBS Pre dosing chemical to be used only if Chlorine based dosing chemical is added prior to filtration.
- Union valve to be connected in between the two cartridge filters.
- MM filters to be controlled manually.

R00	JUNE 2020	STAGE -1	PD	SBC	SD
REV. NO.	Date	Revision Description	Drawn	Chkd	Appd.

Title:

Consultancy Services for Survey, Design and EIA works of Water Supply and Sewerage Facilities in 6 islands, Maldives - Package 5

Sub Title:

Water Supply System in V. Keyodhoo

Client:

Ministry of National Planning, Housing and Infrastructure, Republic of Maldives

EPOCH ASSOCIATES
T: +960 333 3528
E: info@epoch.associates
W: wwww.epoch.associates
A: G. Rosary West,
Husnuheenaa Magu, Male', Maldives

FEEDBACK INFRA
Making Infrastructure Happen

Drawn: F.I.A.
Checked: M.S.S.
Designed: F.I.A.
Approved: I.W.
Date: Sep 2020
SCALE (A3): NTS
Project No: EP-WS/2019/05
Rev: R-01
Page: W-07

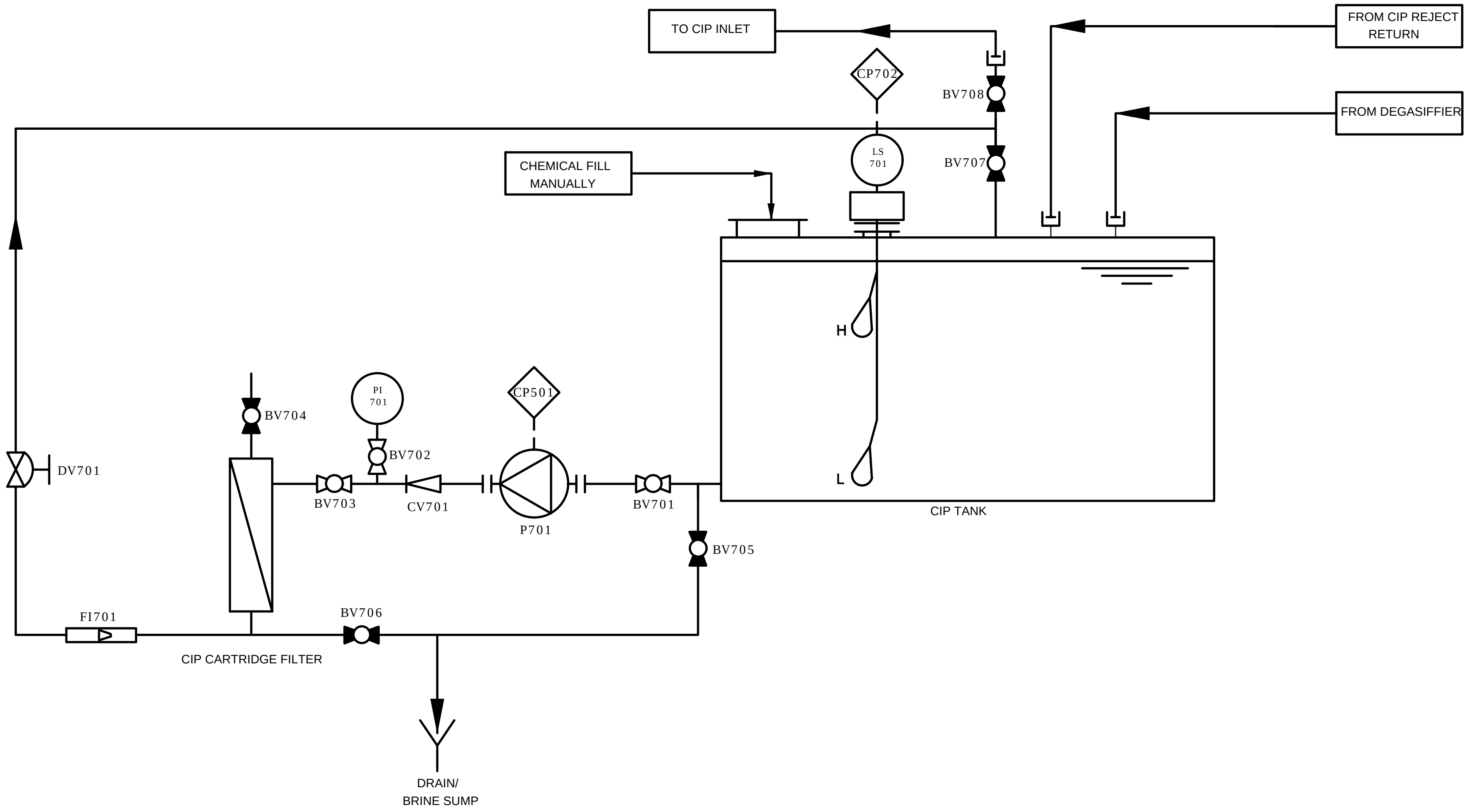
TO CIP INLET
FROM CIP REJECT RETURN
FROM DEGASIFFIER
CP702
BV708
BV707
CHEMICAL FILL MANUALLY
LS 701
H
L
CIP TANK
CP501
PI 701
BV704
BV702
BV703
CV701
P701
BV701
BV705
DV701
FI701
BV706
CIP CARTRIDGE FILTER
DRAIN/ BRINE SUMP

DETAIL C

LEGEND

ACTUATION	VALVES		FEATURES	CONDITION	ABBREVIATIONS
MANUALLY OPERATED	BUTTERFLY	MOTORIZED BALL	FLANGED CONNECTION	VALVE NORMALLY OPEN	LS - LEVEL SENSOR
DIAPHRAGM - SINGLE ACTING	BALL	TORTALIZER	TRAP	VALVE NORMALLY CLOSED	FT - FLOW TRANSMITTER
DIAPHRAGM - DOUBLE ACTING	DIAPHRAGM	GATE	DISCHARGE TO ATMOSPHERE		PI - PRESSURE INDICATOR
PNEUMATIC PISTON	3-WAY	CHECK VALVE	SAMPLING POINT (SP)		SP - SAMPLING POINT
	SLUICE	MOTORIZED 3 WAY	FLOW INDICATOR		AR - AIR RELEASE
					P - PUMP
					PG - PRESSURE GAUGE
					PS - PRESSURE SENSOR
					CP - CONNECTION POINT
					LT - LEVEL TRANSMITTER
					QIT - CONDUCTIVITY INDICATOR
					PLC - PROGRAMMABLE LOGIC CONTROLLER

Legend

Note:
- Flexible hose VIC connection to be used for during CIP use and flushing.

R00	JUNE 2020	STAGE -1	PD	SBC	SD
REV. NO.	Date	Revision Description	Drawn	Chkd	Appd.

Title:
Consultancy Services for Survey, Design and EIA works of Water Supply and Sewerage Facilities in 6 islands, Maldives - Package 5

Sub Title:
Water Supply System in V. Keyodhoo

Client:
Ministry of National Planning, Housing and Infrastructure, Republic of Maldives

EPOCH ASSOCIATES
T: +960 333 3528
E: info@epoch.associates
W: wwww.epoch.associates
A: G. Rosary West,
Husnuheenaa Magu, Male', Maldives

FEEDBACK INFRA
Making Infrastructure Happen

Drawn:	F.I.A.	Checked:	M.S.S.
Designed:	F.I.A.	Approved:	I.W.
Date:	Sep 2020	SCALE (A3):	NTS
Project No:	EP-WS/2019/05		
Rev:	R-01	Page:	W-08

IWRM PLANT P&I DETAIL C

NTS

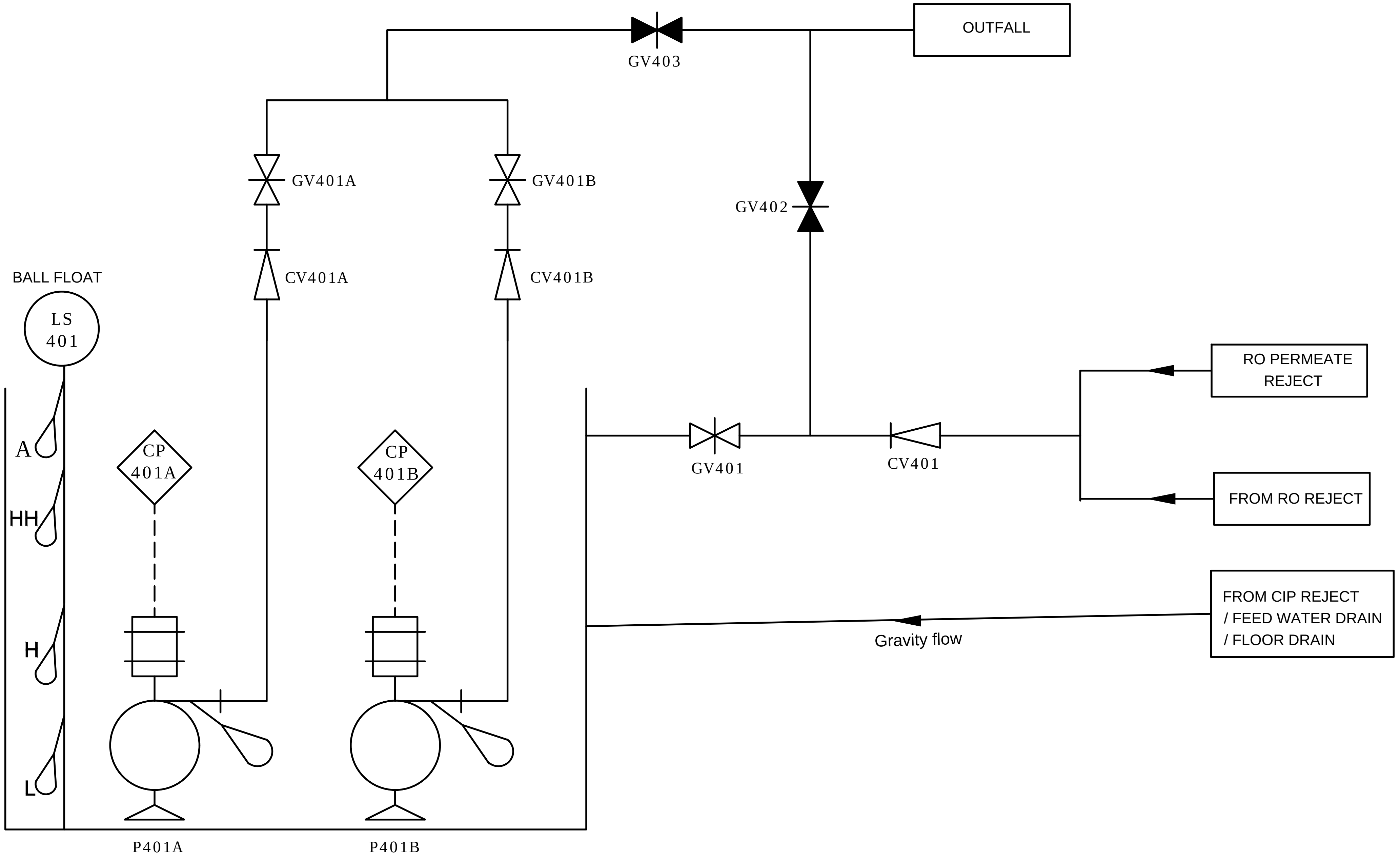
GV403
OUTFALL
GV401A
GV401B
GV402
CV401A
CV401B
BALL FLOAT
LS
401
RO PERMEATE
REJECT
A
CP
401A
CP
401B
GV401
CV401
FROM RO REJECT
HH
FROM CIP REJECT
/ FEED WATER DRAIN
/ FLOOR DRAIN
Gravity flow
H
L
P401A
P401B

BRINE BALANCE SUMPS

DETAIL D

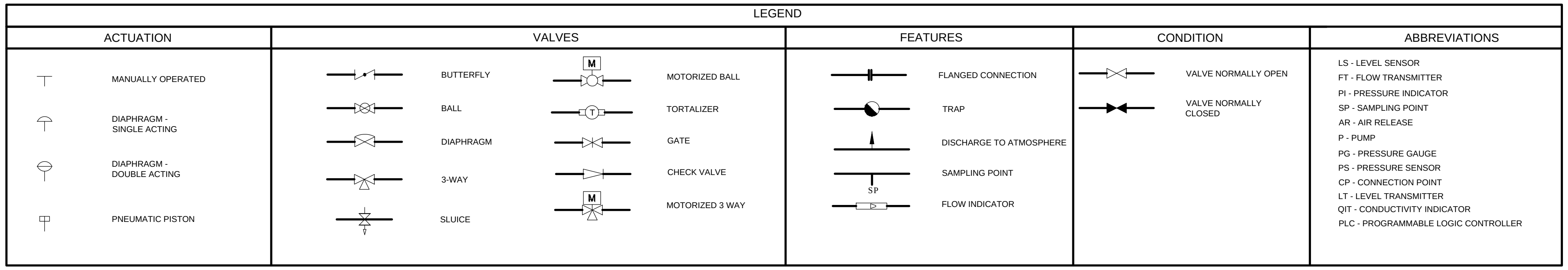
LEGEND
ACTUATION
MANUALLY OPERATED
DIAPHRAGM -
SINGLE ACTING
DIAPHRAGM -
DOUBLE ACTING
PNEUMATIC PISTON
VALVES
BUTTERFLY
BALL
DIAPHRAGM
3-WAY
SLUICE
M
MOTORIZED BALL
T
TORTALIZER
GATE
CHECK VALVE
M
MOTORIZED 3 WAY
FEATURES
FLANGED CONNECTION
TRAP
DISCHARGE TO ATMOSPHERE
SAMPLING POINT
SP
FLOW INDICATOR
CONDITION
VALVE NORMALLY OPEN
VALVE NORMALLY
CLOSED
ABBREVIATIONS

LS - LEVEL SENSOR
FT - FLOW TRANSMITTER
PI - PRESSURE INDICATOR
SP - SAMPLING POINT
AR - AIR RELEASE
P - PUMP
PG - PRESSURE GAUGE
PS - PRESSURE SENSOR
CP - CONNECTION POINT
LT - LEVEL TRANSMITTER
QIT - CONDUCTIVITY INDICATOR
PLC - PROGRAMMABLE LOGIC CONTROLLER

IWRM PLANT P&I DETAIL D

NTS

N

Legend

Note:
- Separate pipeline to be laid out connecting the drain points around the plant area, CIP reject and feed water drain.
- Either Dry mount of submersible pumps to be used.

R00	JUNE 2020	STAGE -1	PD	SBC	SD
REV. NO.	Date	Revision Description	Drawn	Chkd	Appd.

Title:
Consultancy Services for Survey, Design and EIA works of Water Supply and Sewerage Facilities in 6 islands, Maldives - Package 5

Sub Title:
Water Supply System in V. Keyodhoo

Client:
Ministry of National Planning, Housing and Infrastructure, Republic of Maldives

EPOCH ASSOCIATES
T: +960 333 3528
E: info@epoch.associates
W: wwww.epoch.associates
A: G. Rosary West,
Husnuheenaa Magu, Male', Maldives

FEEDBACK INFRA
Making Infrastructure Happen

Drawn: F.I.A.
Checked: M.S.S.
Designed: F.I.A.
Approved: I.W.
Date: Sep 2020
SCALE (A3): NTS
Project No: EP-WS/2019/05
Rev: R-01
Page: W-09

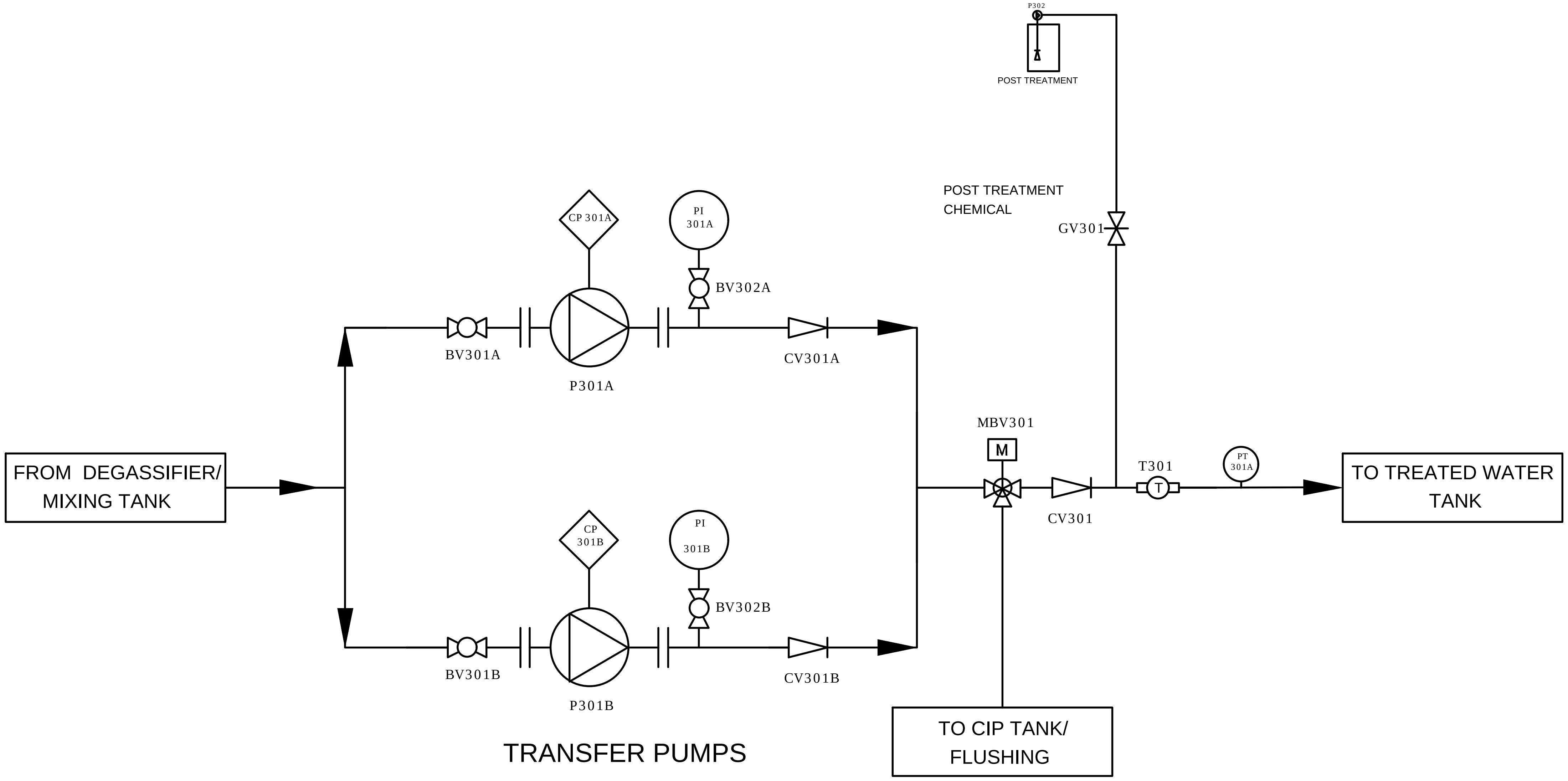
P302
POST TREATMENT
POST TREATMENT CHEMICAL
GV301
CP 301A
PI 301A
BV302A
BV301A
P301A
CV301A
MBV301
M
T301
T
PT 301A
FROM DEGASSIFIER/ MIXING TANK
TO TREATED WATER TANK
CV301
CP 301B
PI 301B
BV302B
BV301B
P301B
CV301B
TO CIP TANK/ FLUSHING
TRANSFER PUMPS

DETAIL E

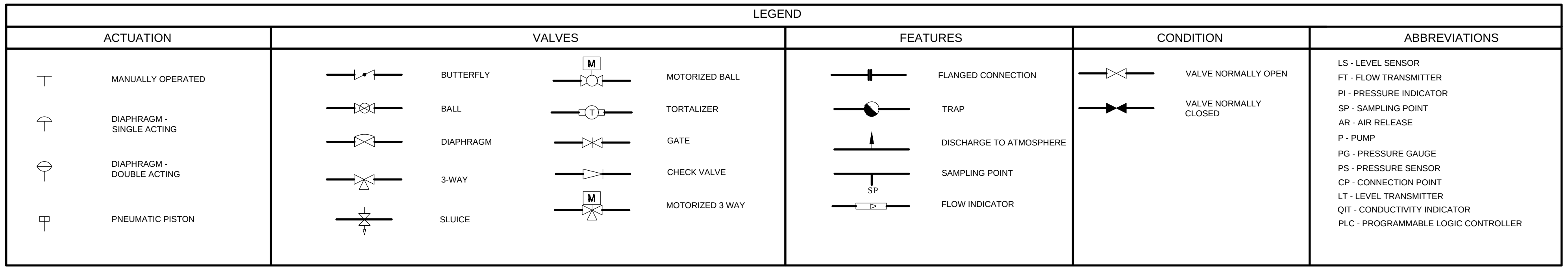

LEGEND

ACTUATION	VALVES		FEATURES	CONDITION	ABBREVIATIONS
MANUALLY OPERATED	BUTTERFLY	MOTORIZED BALL	FLANGED CONNECTION	VALVE NORMALLY OPEN	LS - LEVEL SENSOR
DIAPHRAGM - SINGLE ACTING	BALL	TORTALIZER	TRAP	VALVE NORMALLY CLOSED	FT - FLOW TRANSMITTER
DIAPHRAGM - DOUBLE ACTING	DIAPHRAGM	GATE	DISCHARGE TO ATMOSPHERE		PI - PRESSURE INDICATOR
PNEUMATIC PISTON	3-WAY	CHECK VALVE	SAMPLING POINT		SP - SAMPLING POINT
	SLUICE	MOTORIZED 3 WAY	FLOW INDICATOR		AR - AIR RELEASE
					P - PUMP
					PG - PRESSURE GAUGE
					PS - PRESSURE SENSOR
					CP - CONNECTION POINT
					LT - LEVEL TRANSMITTER
					QIT - CONDUCTIVITY INDICATOR
					PLC - PROGRAMMABLE LOGIC CONTROLLER

IWRM PLANT P&I DETAIL E

NTS

N

Legend

REV. NO.	Date	Revision Description	Drawn	Chkd	Appd.
R00	JUNE 2020	STAGE -1	PD	SBC	SD

Title:
Consultancy Services for Survey, Design and EIA works of Water Supply and Sewerage Facilities in 6 islands, Maldives - Package 5

Sub Title:
Water Supply System in V. Keyodhoo

Client:
Ministry of National Planning, Housing and Infrastructure, Republic of Maldives

EPOCH ASSOCIATES
T: +960 333 3528
E: info@epoch.associates
W: wwww.epoch.associates
A: G. Rosary West,
Husnuheenaa Magu, Male', Maldives

FEEDBACK INFRA
Making Infrastructure Happen

Drawn:	F.I.A.	Checked:	M.S.S.
Designed:	F.I.A.	Approved:	I.W.
Date:	Sep 2020	SCALE (A3):	NTS

Project No: EP-WS/2019/05

Rev: R-01

Page: W-10

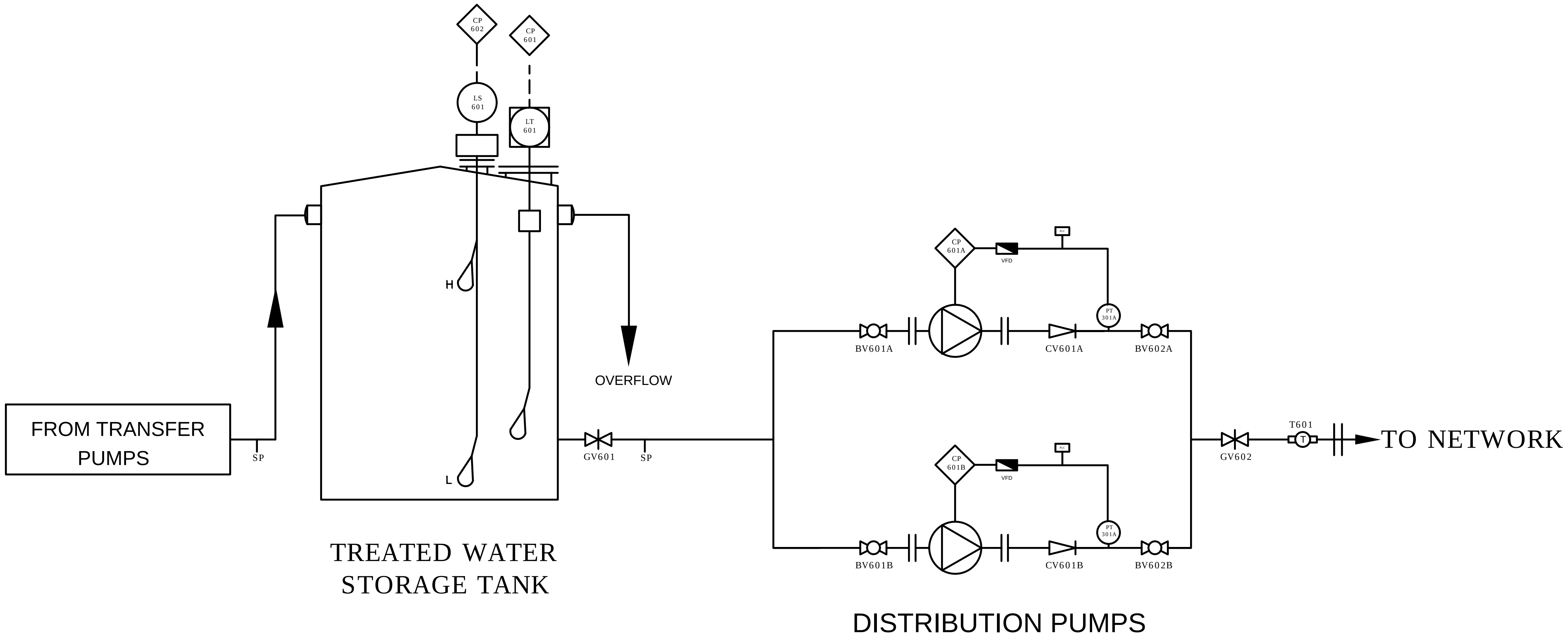
CP 602
CP 601
LS 601
LT 601
H
L
FROM TRANSFER PUMPS
SP
GV601
SP
OVERFLOW
CP 601A
VFD
PT 301A
BV601A
CV601A
BV602A
CP 601B
VFD
PT 301A
BV601B
CV601B
BV602B
GV602
T601
T
TO NETWORK
TREATED WATER STORAGE TANK
DISTRIBUTION PUMPS

DETAIL F

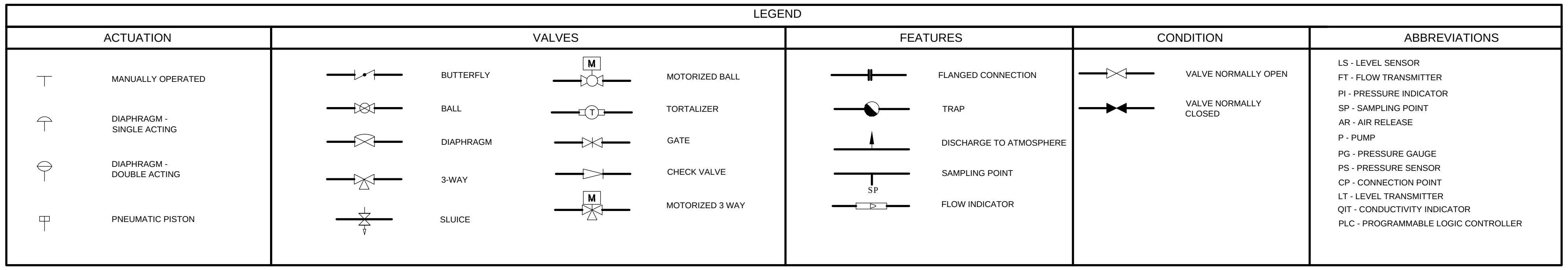

LEGEND

ACTUATION	VALVES		FEATURES	CONDITION	ABBREVIATIONS
MANUALLY OPERATED	BUTTERFLY	MOTORIZED BALL	FLANGED CONNECTION	VALVE NORMALLY OPEN	LS - LEVEL SENSOR FT - FLOW TRANSMITTER PI - PRESSURE INDICATOR SP - SAMPLING POINT AR - AIR RELEASE P - PUMP PG - PRESSURE GAUGE PS - PRESSURE SENSOR CP - CONNECTION POINT LT - LEVEL TRANSMITTER QIT - CONDUCTIVITY INDICATOR PLC - PROGRAMMABLE LOGIC CONTROLLER
DIAPHRAGM - SINGLE ACTING	BALL	TORTALIZER	TRAP	VALVE NORMALLY CLOSED	
	DIAPHRAGM	GATE	DISCHARGE TO ATMOSPHERE		
DIAPHRAGM - DOUBLE ACTING	3-WAY	CHECK VALVE	SAMPLING POINT		
PNEUMATIC PISTON	SLUICE	MOTORIZED 3 WAY	FLOW INDICATOR		

IWRM PLANT P&I DETAIL F

NTS

N

Legend

REV. NO.	Date	Revision Description	Drawn	Chkd	Appd.
R00	JUNE 2020	STAGE -1	PD	SBC	SD

Title:
Consultancy Services for Survey, Design and EIA works of Water Supply and Sewerage Facilities in 6 islands, Maldives - Package 5

Sub Title:
Water Supply System in V. Keyodhoo

Client:
Ministry of National Planning, Housing and Infrastructure, Republic of Maldives

EPOCH ASSOCIATES
T: +960 333 3528
E: info@epoch.associates
W: wwww.epoch.associates
A: G. Rosary West,
Husnuheenaa Magu, Male', Maldives

FEEDBACK INFRA
Making Infrastructure Happen

Drawn:	F.I.A.	Checked:	M.S.S.
Designed:	F.I.A.	Approved:	I.W.
Date:	Sep 2020	SCALE (A3):	NTS

Project No: EP-WS/2019/05

Rev: R-01

Page: W-11

UV DISINFECTION

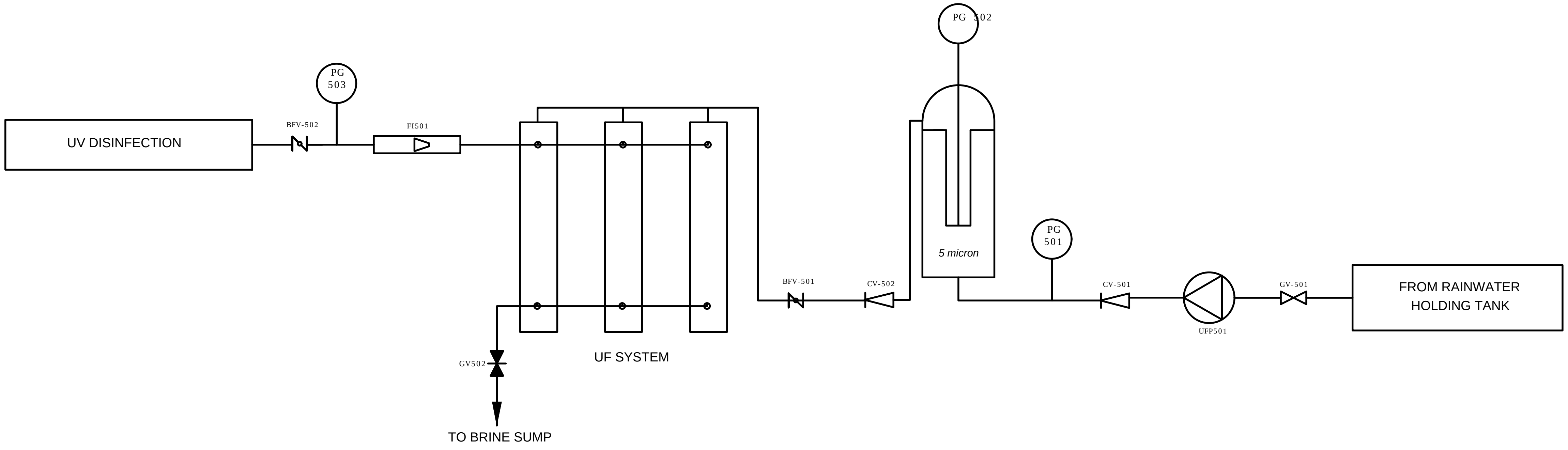
UV DISINFECTION
BFV-502
PG 503
FI501
GV502
TO BRINE SUMP
UF SYSTEM
BFV-501
CV-502
PG 502
5 micron
PG 501
CV-501
UFP501
GV-501
FROM RAINWATER HOLDING TANK

DETAIL G

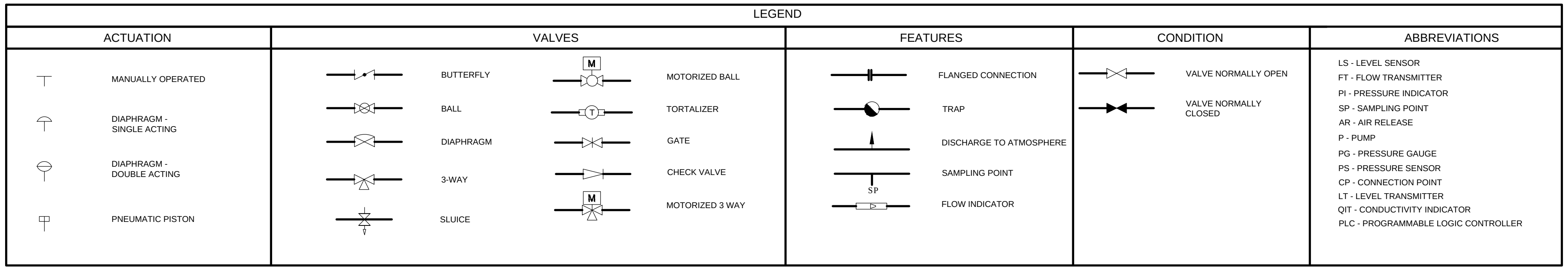
LEGEND
ACTUATION
MANUALLY OPERATED
DIAPHRAGM - SINGLE ACTING
DIAPHRAGM - DOUBLE ACTING
PNEUMATIC PISTON
VALVES
BUTTERFLY
BALL
DIAPHRAGM
3-WAY
SLUICE
M
MOTORIZED BALL
T
TORTALIZER
GATE
CHECK VALVE
M
MOTORIZED 3 WAY
FEATURES
FLANGED CONNECTION
TRAP
DISCHARGE TO ATMOSPHERE
SP
SAMPLING POINT
FLOW INDICATOR
CONDITION
VALVE NORMALLY OPEN
VALVE NORMALLY CLOSED
ABBREVIATIONS

LS - LEVEL SENSOR
FT - FLOW TRANSMITTER
PI - PRESSURE INDICATOR
SP - SAMPLING POINT
AR - AIR RELEASE
P - PUMP
PG - PRESSURE GAUGE
PS - PRESSURE SENSOR
CP - CONNECTION POINT
LT - LEVEL TRANSMITTER
QIT - CONDUCTIVITY INDICATOR
PLC - PROGRAMMABLE LOGIC CONTROLLER

IWRM PLANT P&I DETAIL G

NTS

N

Legend

R00	JUNE 2020	STAGE -1	PD	SBC	SD
REV. NO.	Date	Revision Description	Drawn	Chkd	Appd.

Title:
Consultancy Services for Survey, Design and EIA works of Water Supply and Sewerage Facilities in 6 islands, Maldives - Package 5

Sub Title:
Water Supply System in V. Keyodhoo

Client:
Ministry of National Planning, Housing and Infrastructure, Republic of Maldives

EPOCH ASSOCIATES
T: +960 333 3528
E: info@epoch.associates
W: wwww.epoch.associates
A: G. Rosary West,
Husnuheenaa Magu, Male', Maldives

FEEDBACK INFRA
Making Infrastructure Happen

Drawn: F.I.A.
Checked: M.S.S.
Designed: F.I.A.
Approved: I.W.
Date: Sep 2020
SCALE (A3): NTS
Project No: EP-WS/2019/05
Rev: R-01
Page: W-12

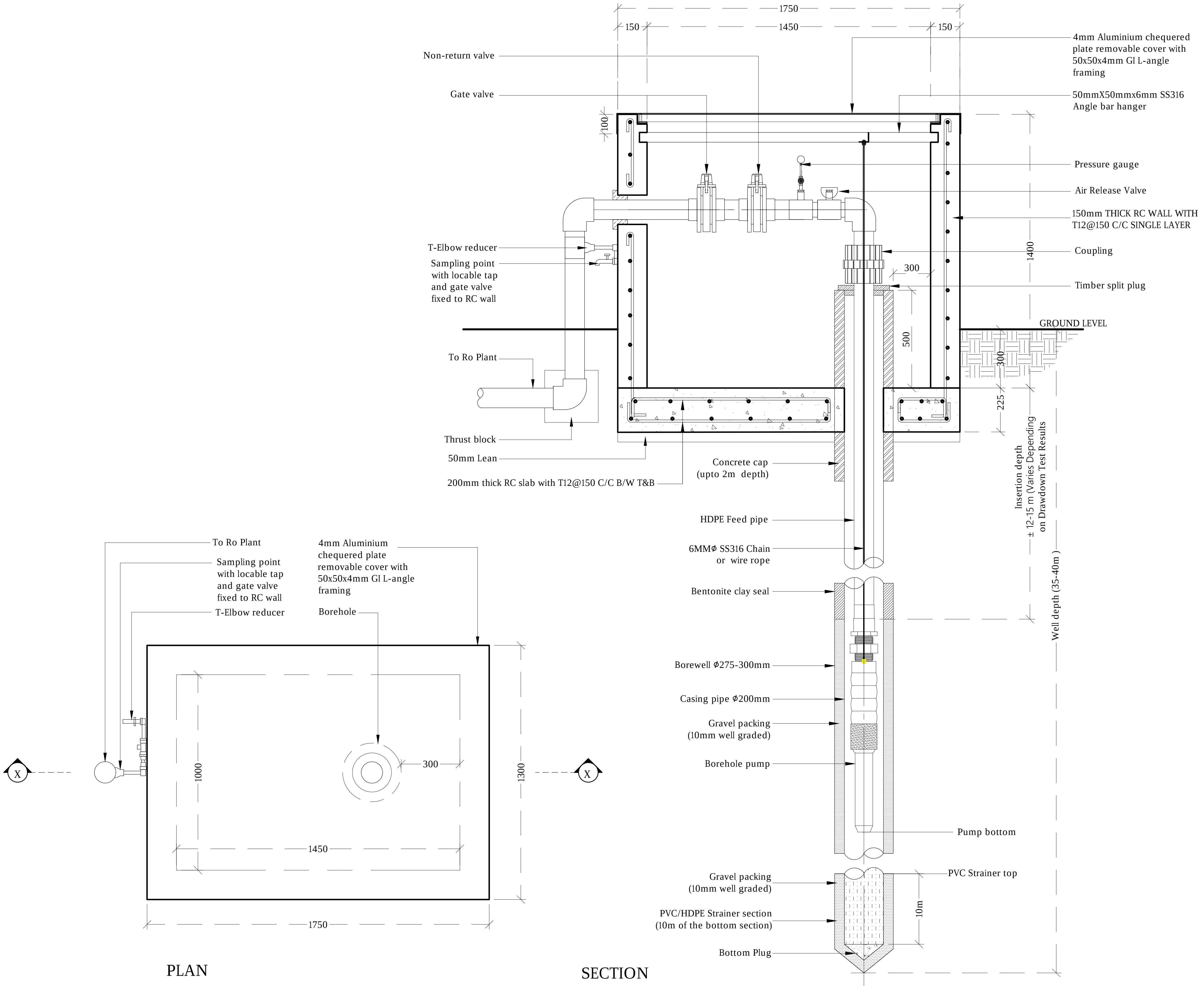
1750
150
1450
150
Non-return valve
Gate valve
4mm Aluminium chequered plate removable cover with 50x50x4mm GI L-angle framing
50mmX50mmx6mm SS316 Angle bar hanger
100
Pressure gauge
Air Release Valve
150mm THICK RC WALL WITH T12@150 C/C SINGLE LAYER
T-Elbow reducer
Sampling point with locable tap and gate valve fixed to RC wall
1400
Coupling
300
Timber split plug
GROUND LEVEL
500
300
To Ro Plant
225
Thrust block
50mm Lean
200mm thick RC slab with T12@150 C/C B/W T&B
Concrete cap (upto 2m depth)
Insertion depth ± 12-15 m (Varies Depending on Drawdown Test Results
HDPE Feed pipe
6MMΦ SS316 Chain or wire rope
Well depth (35-40m)
Bentonite clay seal
Borewell Φ275-300mm
Casing pipe Φ200mm
Gravel packing (10mm well graded)
Borehole pump
Pump bottom
Gravel packing (10mm well graded)
PVC Strainer top
10m
PVC/HDPE Strainer section (10m of the bottom section)
Bottom Plug
To Ro Plant
Sampling point with locable tap and gate valve fixed to RC wall
T-Elbow reducer
4mm Aluminium chequered plate removable cover with 50x50x4mm GI L-angle framing
Borehole
X
X
300
1000
1300
1450
1750

PLAN

SECTION

BOREHOLE DETAILS

NTS

Legend

Notes:
-All structural concrete shall be of grade C30.
-All castings shall be done using sulphate resistant portland cement to BS 4027:1996.
-All structural reinforcement shall be epoxy coating of non-pre-stressed reinforcement to ASTM-A775/A775M.
-A cover of 75mm should be given for all reinforcements.
- All concrete cold joints shall casted with bonding agent
-Casing pipe to be HDPE or PVC with a diameter of 200mm.
-Contractor to submit well development methodology for approval by engineer.
-Contractor to submit drill logs.
-Contractor to submit drawdown test results for approval by engineer prior to pipe insertion.

R00	JUNE 2020	STAGE -1	PD	SBC	SD
REV. NO.	Date	Revision Description	Drawn	Chkd	Appd.

Title:
Consultancy Services for Survey, Design and EIA works of Water Supply and Sewerage Facilities in 6 islands, Maldives - Package 5

Sub Title:
Water Supply System in V. Keyodhoo

Client:
Ministry of National Planning, Housing and Infrastructure, Republic of Maldives

EPOCH ASSOCIATES
T: +960 333 3528
E: info@epoch.associates
W: wwww.epoch.associates
A: G. Rosary West,
Husnuheenaa Magu, Male', Maldives

FEEDBACK INFRA
Making Infrastructure Happen

Drawn: F.I.A.
Checked: M.S.S.
Designed: F.I.A.
Approved: I.W.
Date: Sep 2020
SCALE (A3): NTS
Project No: EP-WS/2019/05
Rev: R-01
Page: W-13

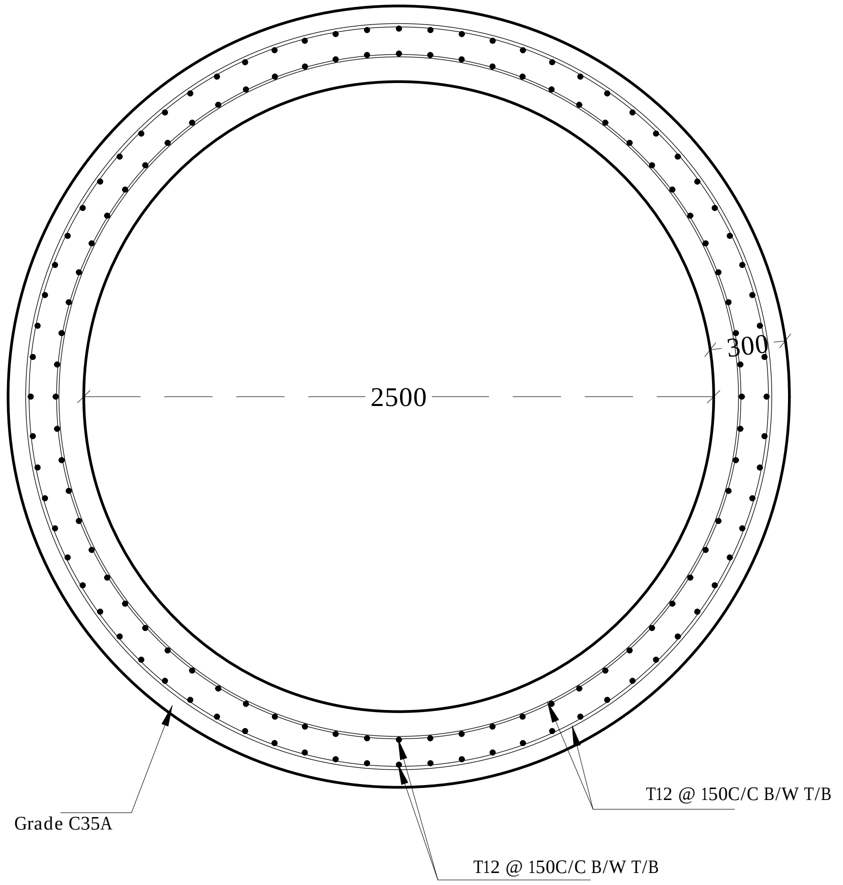
300
2500
T12 @ 150C/C B/W T/B
Grade C35A
T12 @ 150C/C B/W T/B

BRINE WATER TANK PLAN - STRUCTURAL

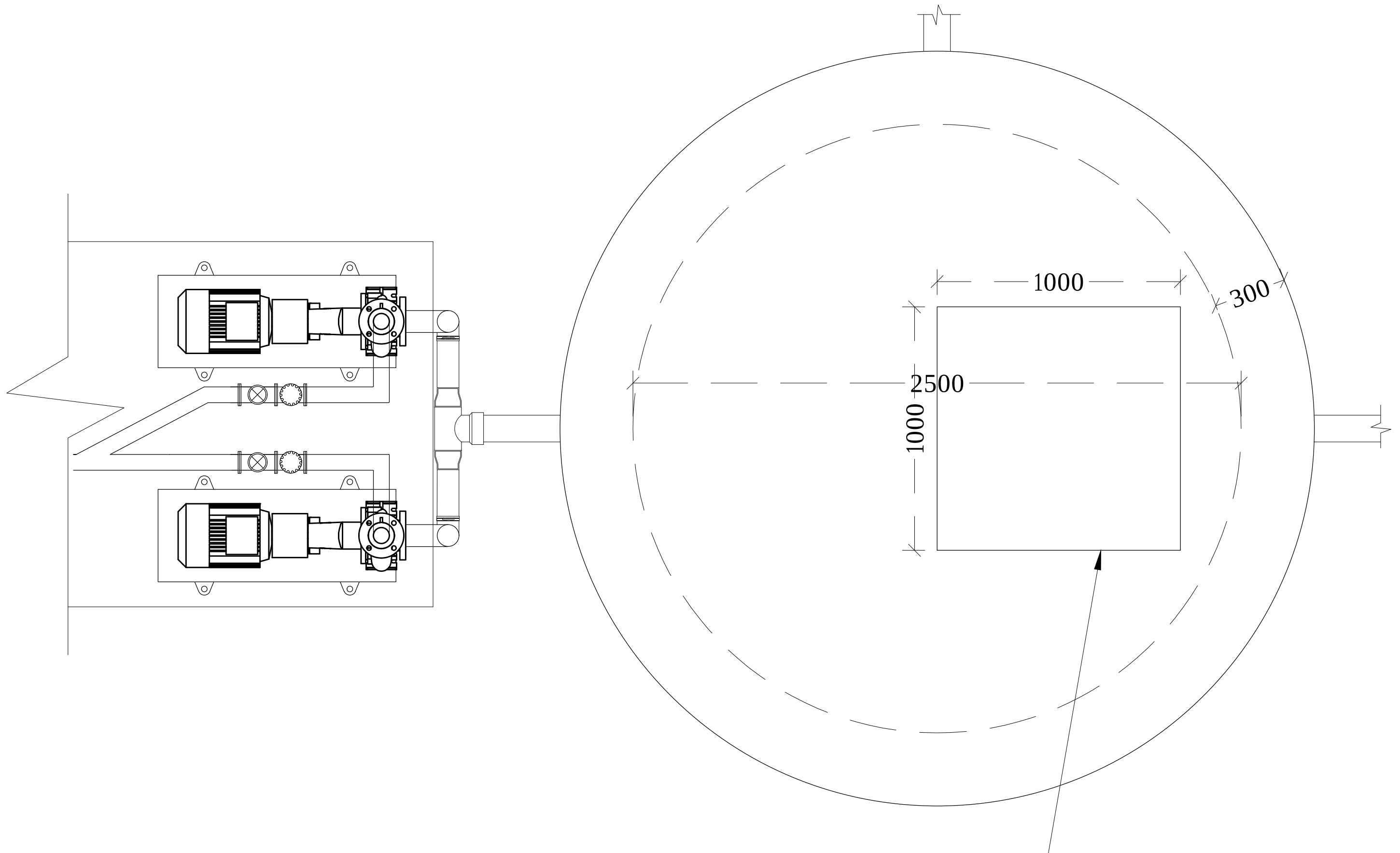
1000
300
2500
1000

BRINE WATER TANK PLAN

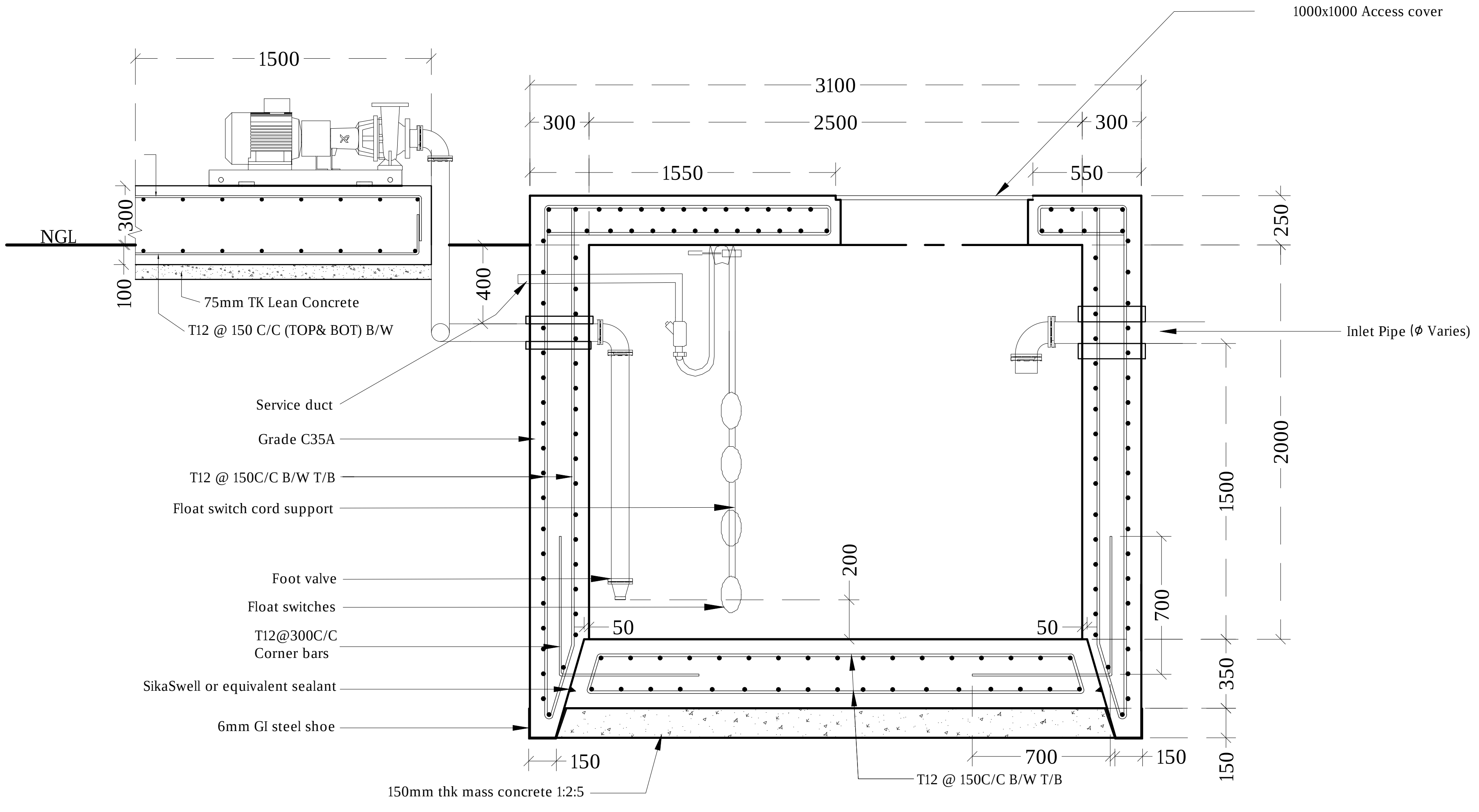
1000x1000 Access cover
1500
3100
300
2500
300
1550
550
NGL
300
100
400
250
75mm TK Lean Concrete
T12 @ 150 C/C (TOP& BOT) B/W
Inlet Pipe (ϕ Varies)
Service duct
Grade C35A
T12 @ 150C/C B/W T/B
Float switch cord support
2000
1500
200
Foot valve
Float switches
T12@300C/C
Corner bars
50
50
700
350
SikaSwell or equivalent sealant
6mm GI steel shoe
150
700
150
150
150mm thk mass concrete 1:2:5
T12 @ 150C/C B/W T/B

BRINE WATER TANK SECTION X-X

BRINE TANK DETAILS

1:30

N

Legend

Note:
-Pumps, pipe work, fittings and control panel shall be installed in accordance with manufacturers recommendations.
-Orientation of tanks and pipe work to suit location.
-All structural concrete shall be of grade C35A.
-All castings shall be done using sulphate resistant portland cement to BS 4027:1996.
-All structural reinforcement shall be epoxy coating of non-pre-stressed reinforcement to ASTM-A775/A775M.
-A cover of 75mm should be given for all reinforcements.
-Internal concrete surfaces to be coated with 5mm thickness of epoxy bonded glass fibre and finished with gel coat or 500 microns epoxy paint coating.
-External concrete surfaces to be painted with 3 coats of bitumen/rubber emulsion and protected by 500 micron polyethene.
- All concrete cold joints shall casted with bonding agent.
- Corner bars (4T16@75C/C T&B) shall be provided around top slab opening.

R00	JUNE 2020	STAGE -1	PD	SBC	SD
REV. NO.	Date	Revision Description	Drawn	Chkd	Appd.

Title:
Consultancy Services for Survey, Design and EIA works of Water Supply and Sewerage Facilities in 6 islands, Maldives - Package 5

Sub Title:
Water Supply System in V. Keyodhoo

Client:
Ministry of National Planning, Housing and Infrastructure, Republic of Maldives

EPOCH ASSOCIATES
T: +960 333 3528
E: info@epoch.associates
W: wwww.epoch.associates
A: G. Rosary West,
Husnuheenaa Magu, Male', Maldives

FEEDBACK INFRA
Making Infrastructure Happen

Drawn:	F.I.A.	Checked:	M.S.S.
Designed:	F.I.A.	Approved:	I.W.
Date:	Sep 2020	SCALE (A3):	1:30

Project No: EP-WS/2019/05

Rev: R-01

Page: W-14

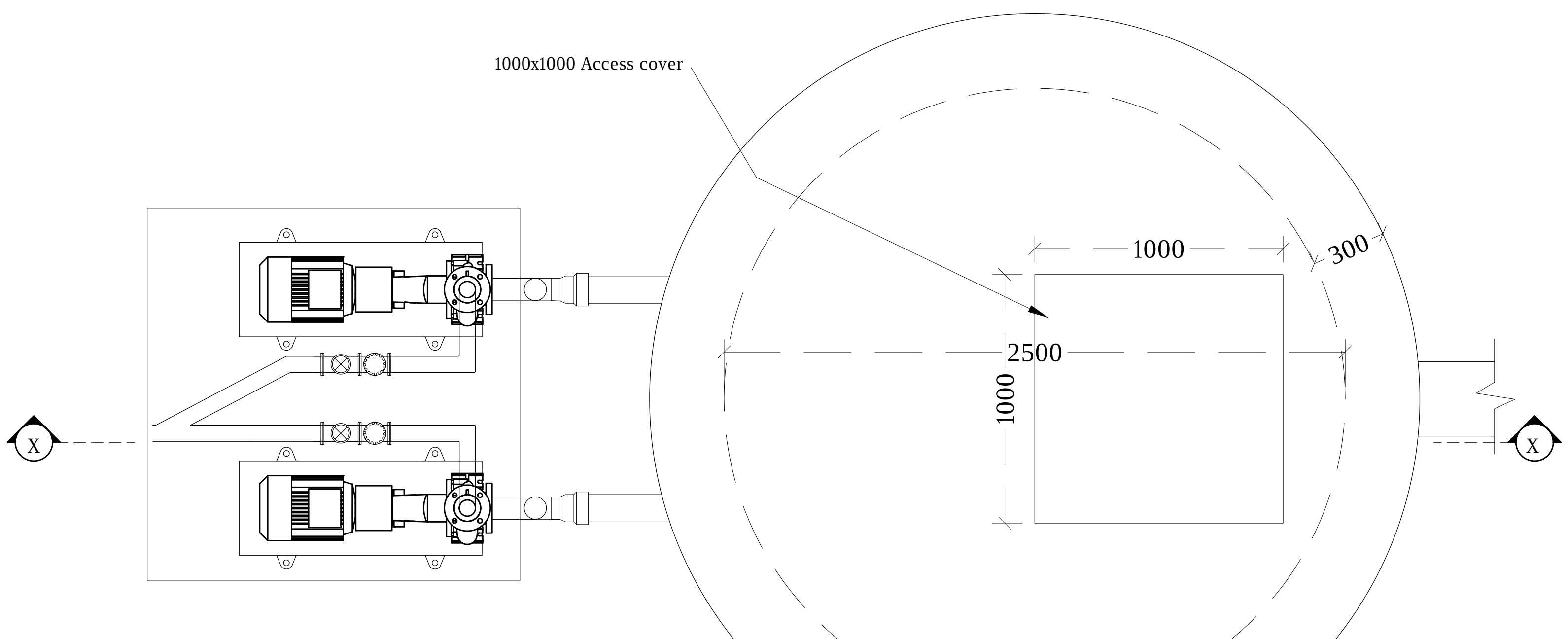
1000x1000 Access cover
1000
300
2500
1000
X
X

RAIN WATER LIFT WELL PLAN

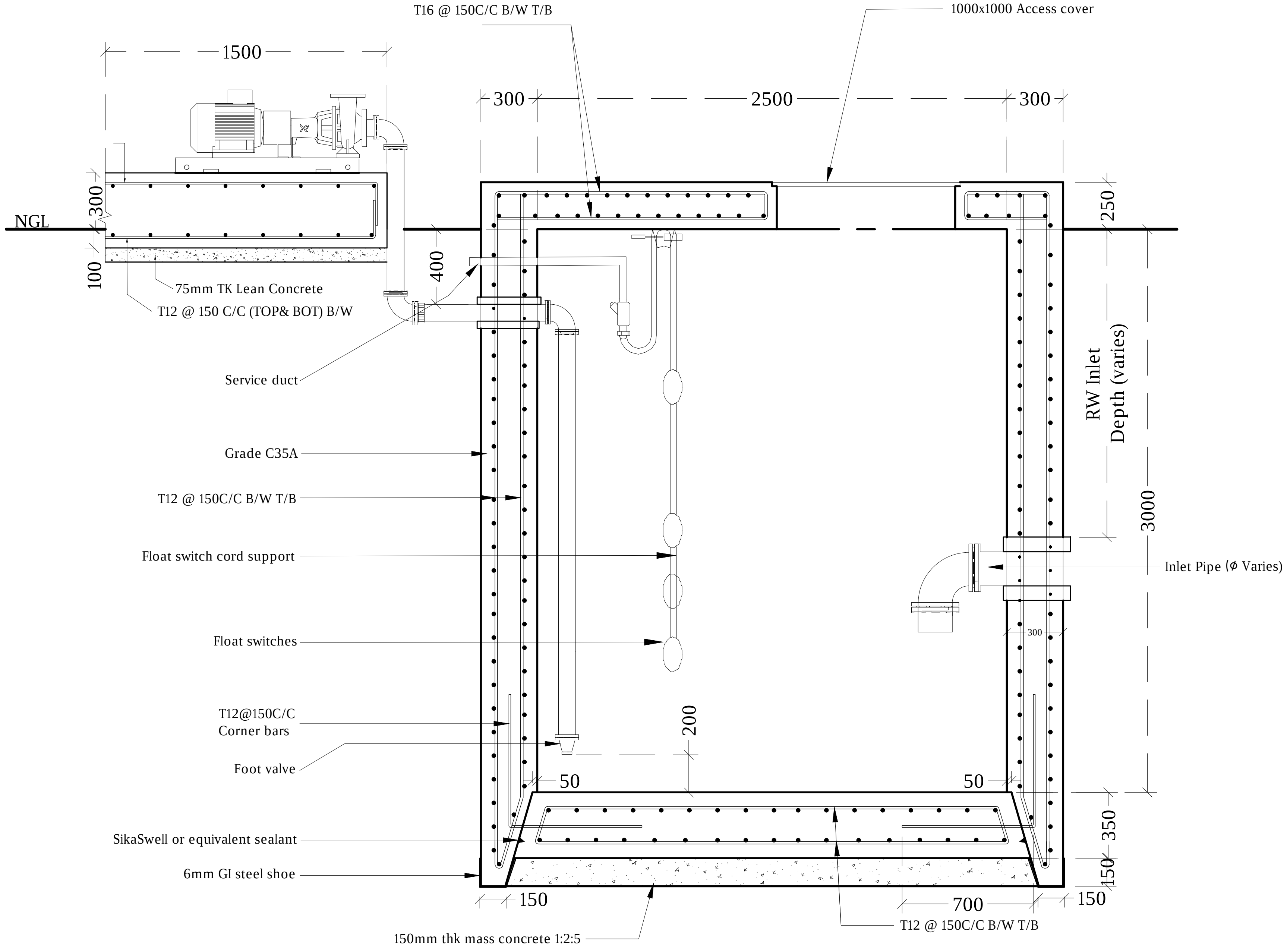
T16 @ 150C/C B/W T/B
1000x1000 Access cover
1500
300
2500
300
NGL
300
100
250
400
75mm TK Lean Concrete
T12 @ 150 C/C (TOP& BOT) B/W
Service duct
RW Inlet Depth (varies)
3000
Grade C35A
T12 @ 150C/C B/W T/B
Float switch cord support
Inlet Pipe (ϕ Varies)
Float switches
300
T12@150C/C Corner bars
Foot valve
200
50
50
SikaSwell or equivalent sealant
350
6mm GI steel shoe
150
150
700
150
150mm thk mass concrete 1:2:5
T12 @ 150C/C B/W T/B

RAIN WATER LIFT WELL SECTION X-X

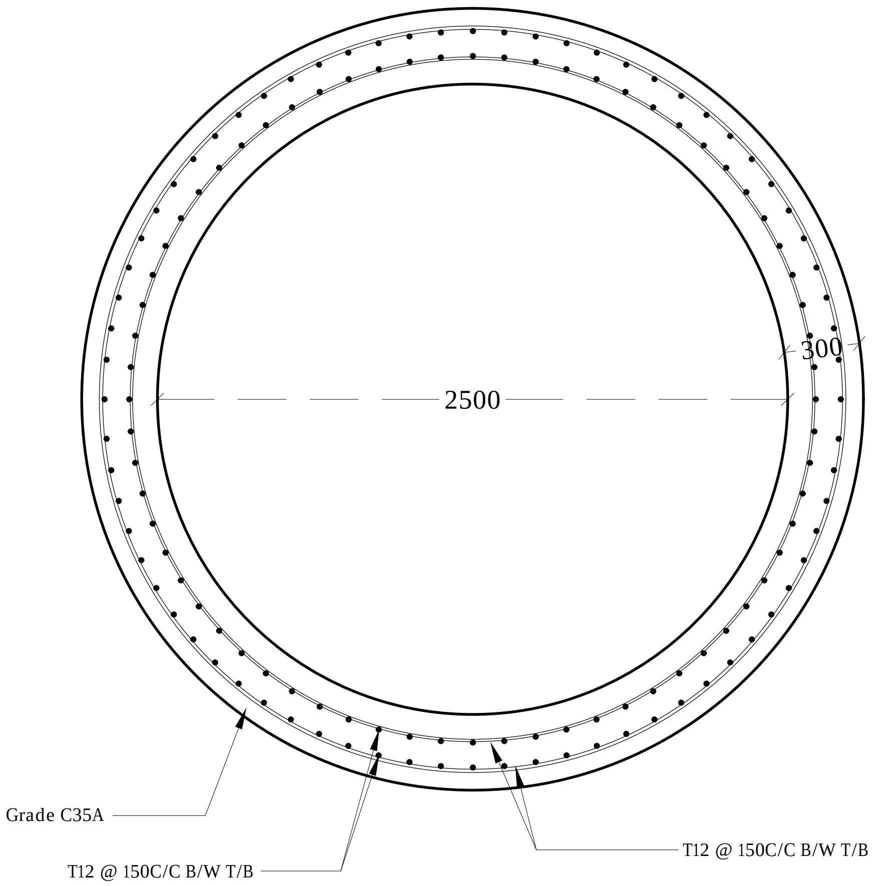
2500
300
Grade C35A
T12 @ 150C/C B/W T/B
T12 @ 150C/C B/W T/B

RAIN WATER LIFT WELL PLAN - STRUCTURAL

RAINWATER LIFT WELL DETAILS

1:30

Legend

Note:

-Pumps, pipe work, fittings and control panel shall be installed in accordance with manufacturers recommendations.

-Orientation of tanks and pipe work to suit location.

-The rainwater lift well will have a filter to prevent entry of debris and dirt.

-All structural concrete shall be of grade C35A.

-All castings shall be done using sulphate resistant portland cement to BS 4027:1996.

-All structural reinforcement shall be epoxy coating of non-pre-stressed reinforcement to ASTM-A775/A775M.

-A cover of 75mm should be given for all reinforcements.

-Internal concrete surfaces to be coated with 5mm thickness of epoxy bonded glass fibre and finished with gel coat or 500 microns epoxy paint coating.

-External concrete surfaces to be painted with 3 coats of bitumen/rubber emulsion and protected by 500 micron polyethene.

- All concrete cold joints shall casted with bonding agent.

- Corner bars (4T16@75C/C T&B) shall be provided around top slab opening.

REV. NO.	Date	Revision Description	Drawn	Chkd	Appd.
R00	JUNE 2020	STAGE -1	PD	SBC	SD

Title:
Consultancy Services for Survey, Design and EIA works of Water Supply and Sewerage Facilities in 6 islands, Maldives - Package 5

Sub Title:
Water Supply System in V. Keyodhoo

Client:
Ministry of National Planning, Housing and Infrastructure, Republic of Maldives

EPOCH ASSOCIATES
T: +960 333 3528
E: info@epoch.associates
W: wwww.epoch.associates
A: G. Rosary West,
Husnuheenaa Magu, Male', Maldives

FEEDBACK INFRA
Making Infrastructure Happen

Drawn: F.I.A.
Checked: M.S.S.
Designed: F.I.A.
Approved: I.W.
Date: Sep 2020
SCALE (A3): 1:30
Project No: EP-WS/2019/05
Rev: R-01
Page: W-15

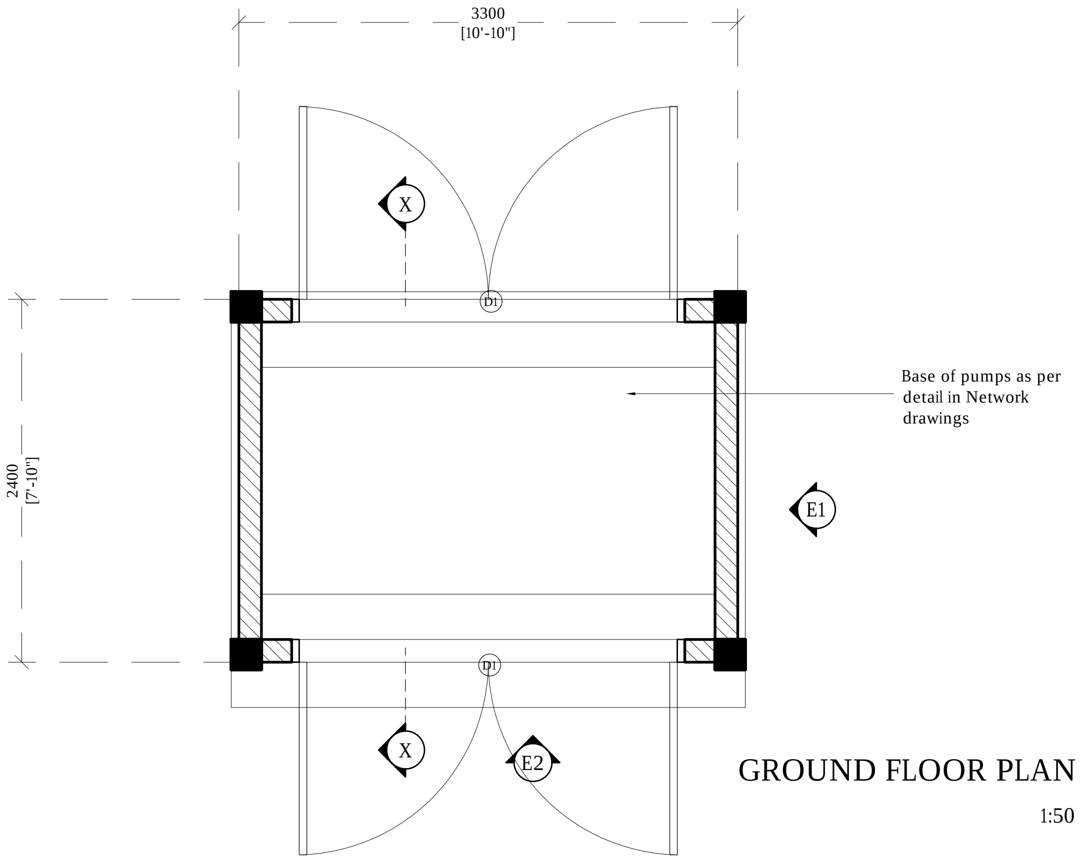
3300
[10'-10"]
2400
[7'-10"]
X
X
E1
E2
D1
D1
Base of pumps as per detail in Network drawings

GROUND FLOOR PLAN

1:50

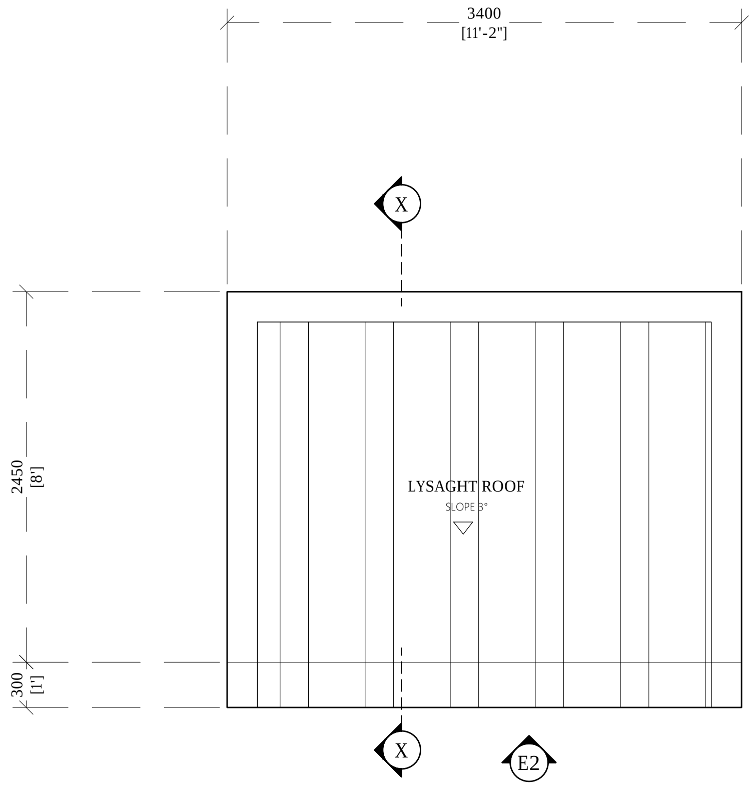
3400
[11'-2"]
2450
[8']
300
[1']
LYSAGHT ROOF
SLOPE 3°
X
X
E1
E2

ROOF PLAN

1:50

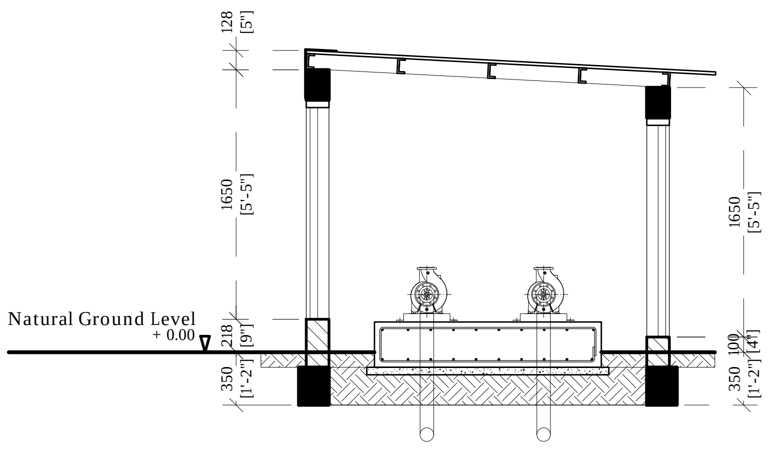
128
[5"]
1650
[5'-5"]
218
[9"]
350
[1'-2"]
1650
[5'-5"]
100
[4"]
350
[1'-2"]
Natural Ground Level
+ 0.00

SECTION X-X

1:50

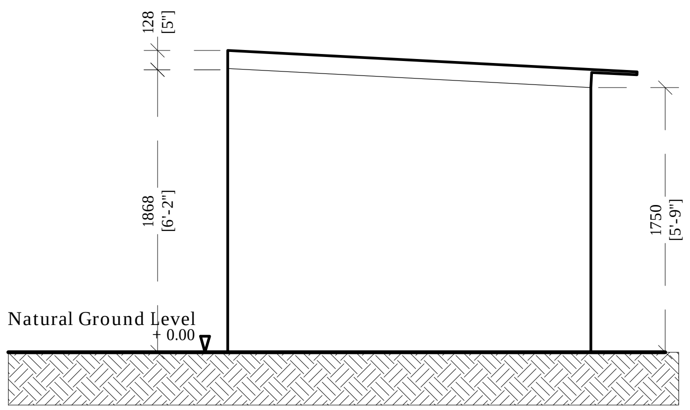
128
[5"]
1868
[6'-2"]
1750
[5'-9"]
Natural Ground Level
+ 0.00

ELEVATION E1

1:100

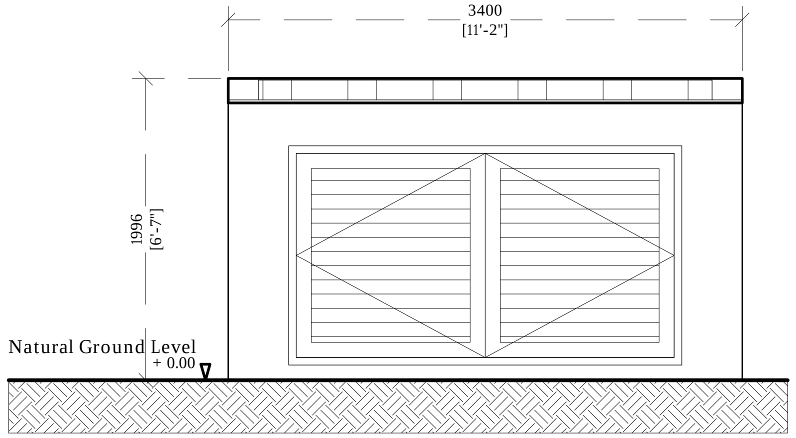
3400
[11'-2"]
1996
[6'-7"]
Natural Ground Level
+ 0.00

ELEVATION E2

1:100

PUMP SHED DETAILS

N

Legend

REV. NO.	Date	Revision Description	Drawn	Chkd	Appd.
R00	JUNE 2020	STAGE -1	PD	SBC	SD

Title:
Consultancy Services for Survey, Design and EIA works of Water Supply and Sewerage Facilities in 6 islands, Maldives - Package 5

Sub Title:
Water Supply System in V. Keyodhoo

Client:
Ministry of National Planning, Housing and Infrastructure, Republic of Maldives

EPOCH ASSOCIATES
T: +960 333 3528
E: info@epoch.associates
W: wwww.epoch.associates
A: G. Rosary West,
Husnuheenaa Magu, Male', Maldives

FEEDBACK INFRA
Making Infrastructure Happen

Drawn: F.I.A.
Checked: M.S.S.
Designed: F.I.A.
Approved: I.W.
Date: Sep 2020
SCALE (A3): -
Project No: EP-WS/2019/05
Rev: R-01
Page: W-16

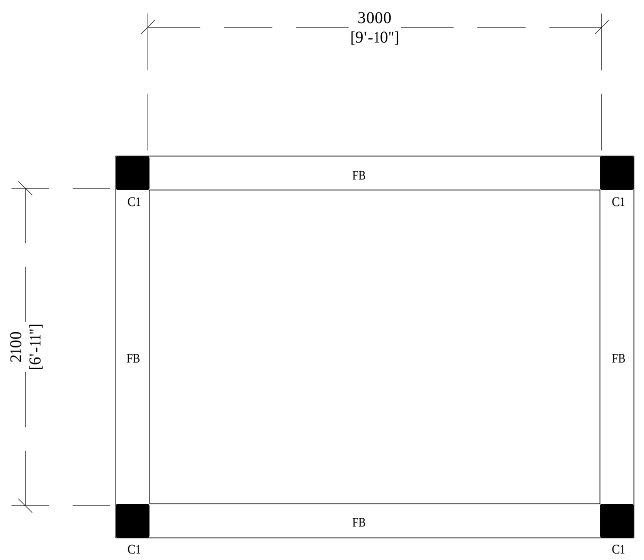

GROUND FLOOR PLAN

1:100

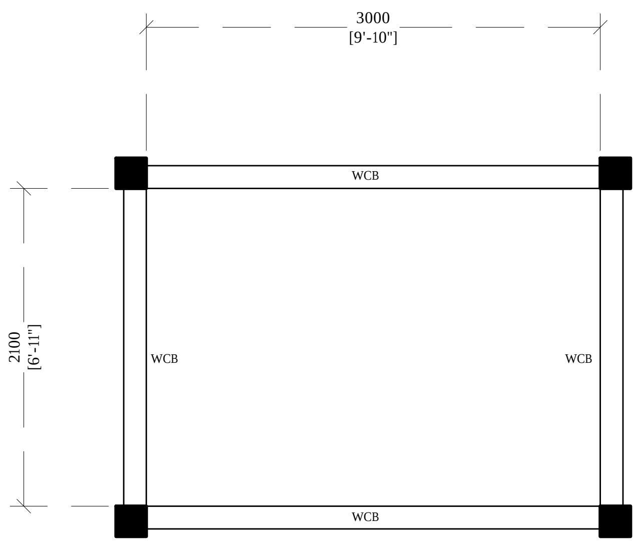

ROOF PLAN

1:100

Door ID	
Plan view	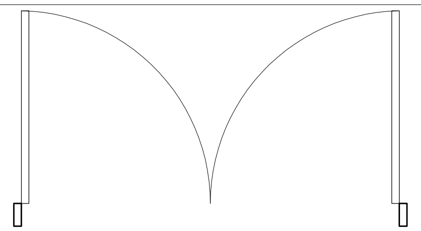
Elevation view	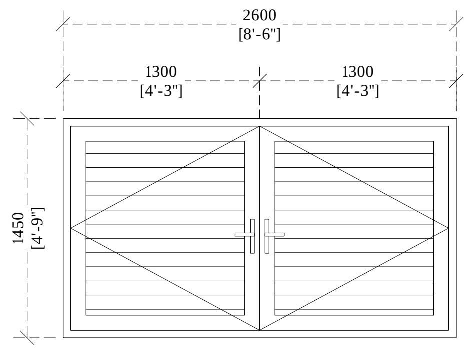 2600 [8'-6"] 1300 [4'-3"] 1300 [4'-3"] 1450 [4'-9"] FFL
Frame material	600 micron powder coated aluminum frames
Panel material	600 micron powder coated aluminum louvered panel with side aluminum frames with allowance for handle and lock
Openable area	-

General Door Notes:

Dimensions shown on DWG indicate effective openings of frame

All frame depths are 100mm
All dor panel thicknesses are 35mm
All window manel thickness are 25mm
Al frame edges shal be trimmed 3mm

All wodden components should be wood stained finish

All glazing should be of 6mm unless specified

External units must comply the following weather conditions:-
Wind pressure: 200 kg/sqm
Water tightness: 25 kg/sqm

All external frames / wall joints must be sealed with silicon sealant and the wedges trimmed with 12X12mm hardwood beading fixed to frames by brass nails

All hardware should be provided for the performance of al functions of the units

Hinges shall confirm to
1. Door size more than 700X1900mm
    WD: 125mm X2 sets
    SD: 150mm X3 sets
2. Door size less than 700X1900mm
    WD: 100mm X2 sets
    SD: 125mm X2 sets

Locks shall be cylinderical with master key sets

Door knobs shall be1000mm above FFL

Door Schedule

1:100

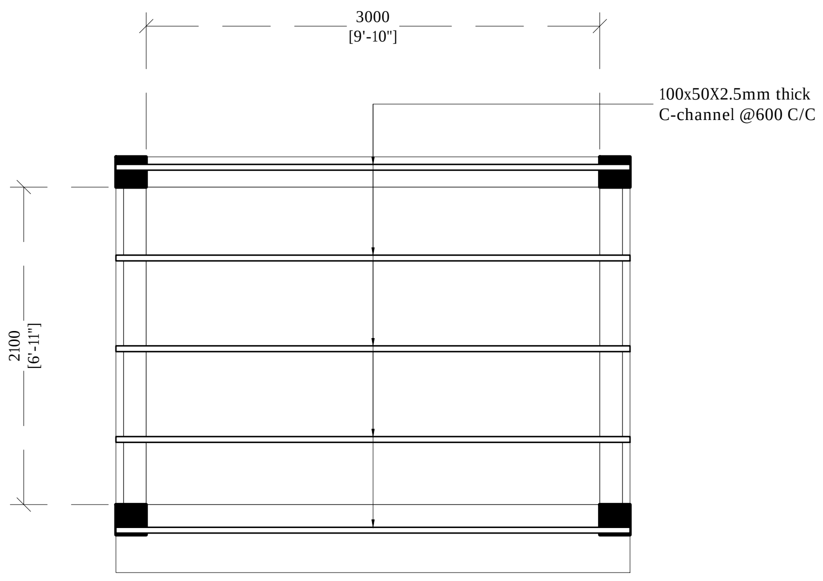

ROOF PLAN

1:100

PUMP SHED DETAILS

Legend

Notes:

- Cover for foundation pads and foundation beams shall be 50mm
- Cover for columns shall be 40mm
- Cover for roof beams shall be 30mm
- Concrete shall be of grade C25
- All concrete cold joints shall casted with bonding agent
- Roof purlins shall be fixed to roof beam with hot-dip galvanized bolts and GI cleats

R00	JUNE 2020	STAGE -1	PD	SBC	SD
REV. NO.	Date	Revision Description	Drawn	Chkd	Appd.

Title:
Consultancy Services for Survey, Design and EIA works of Water Supply and Sewerage Facilities in 6 islands, Maldives - Package 5

Sub Title:
Water Supply System in V. Keyodhoo

Client:
Ministry of National Planning, Housing and Infrastructure, Republic of Maldives

EPOCH ASSOCIATES
T: +960 333 3528
E: info@epoch.associates
W: wwww.epoch.associates
A: G. Rosary West,
Husnuheenaa Magu, Male', Maldives

FEEDBACK INFRA
Making Infrastructure Happen

Drawn: F.I.A.
Checked: M.S.S.
Designed: F.I.A.
Approved: I.W.
Date: Sep 2020
SCALE (A3): 1:100
Project No: EP-WS/2019/05
Rev: R-01
Page: W-17

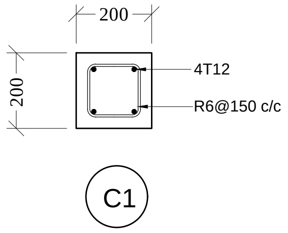

COLUMN DETAIL

1:20

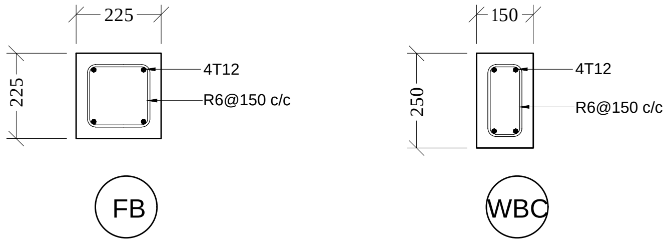

BEAM DETAILS

1:20

PUMP SHED BEAM AND COLUMN DETAILS

1:20

Legend

Notes:

- Cover for foundation pads and foundation beams shall be 50mm
- Cover for columns shall be 40mm
- Cover for roof beams shall be 30mm
- Concrete shall be of grade C25
- All concrete cold joints shall casted with bonding agent
- Roof purlins shall be fixed to roof beam with hot-dip galvanized bolts and GI cleats

R00	JUNE 2020	STAGE -1	PD	SBC	SD
REV. NO.	Date	Revision Description	Drawn	Chkd	Appd.

Title:

Consultancy Services for Survey, Design and EIA works of Water Supply and Sewerage Facilities in 6 islands, Maldives - Package 5

Sub Title:

Water Supply System in V. Keyodhoo

Client:

Ministry of National Planning, Housing and Infrastructure, Republic of Maldives

EPOCH ASSOCIATES
T: +960 333 3528
E: info@epoch.associates
W: wwww.epoch.associates
A: G. Rosary West,
Husnuheenaa Magu, Male', Maldives

FEEDBACK INFRA
Making Infrastructure Happen

Drawn: F.I.A.	Checked: M.S.S.
Designed: F.I.A.	Approved: I.W.
Date: Sep 2020	SCALE (A3): 1:20

Project No: EP-WS/2019/05

Rev: R-01

Page: W-18

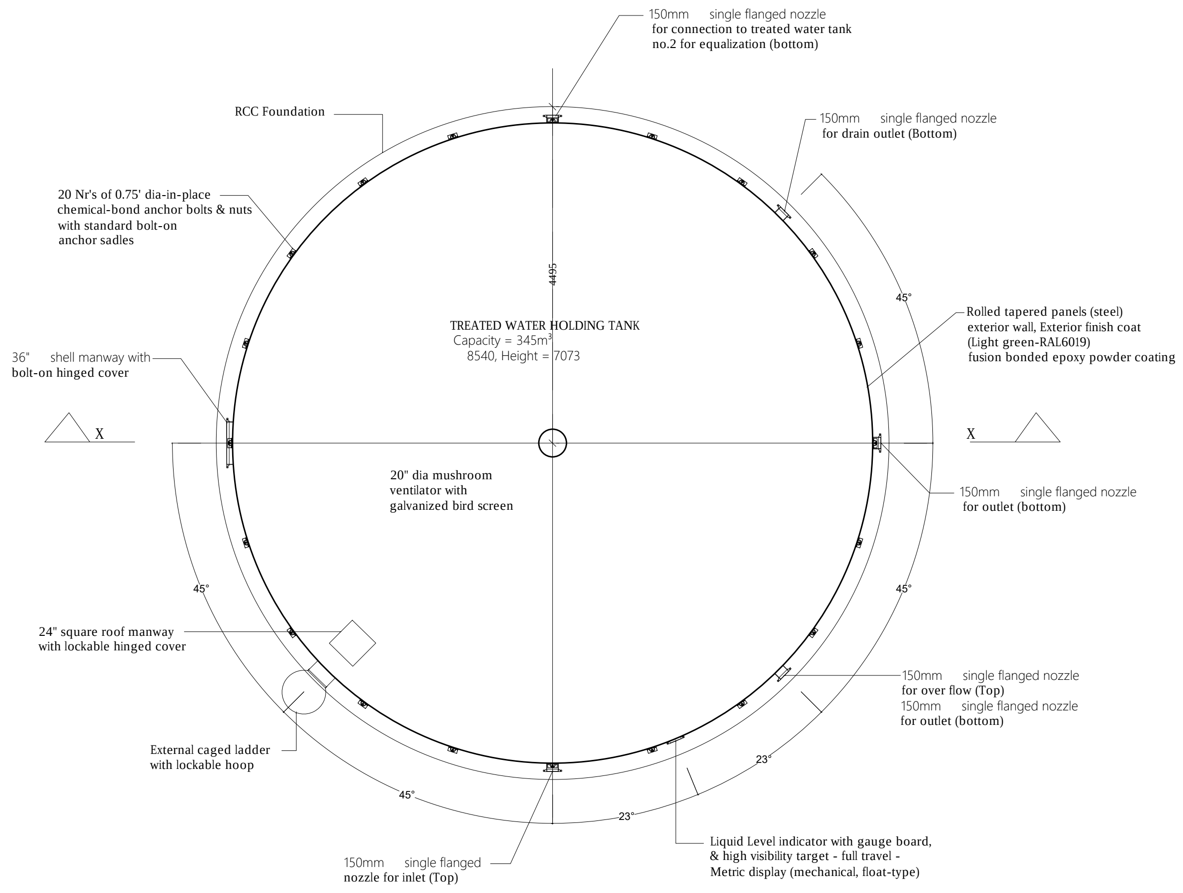
150mm single flanged nozzle
for connection to treated water tank
no.2 for equalization (bottom)
RCC Foundation
150mm single flanged nozzle
for drain outlet (Bottom)
20 Nr's of 0.75' dia-in-place
chemical-bond anchor bolts & nuts
with standard bolt-on
anchor sadles
4495
45°
Rolled tapered panels (steel)
exterior wall, Exterior finish coat
(Light green-RAL6019)
fusion bonded epoxy powder coating
TREATED WATER HOLDING TANK
Capacity = 345m³
8540, Height = 7073
36" shell manway with
bolt-on hinged cover
X
X
20" dia mushroom
ventilator with
galvanized bird screen
150mm single flanged nozzle
for outlet (bottom)
45°
45°
24" square roof manway
with lockable hinged cover
150mm single flanged nozzle
for over flow (Top)
150mm single flanged nozzle
for outlet (bottom)
External caged ladder
with lockable hoop
23°
45°
23°
150mm single flanged
nozzle for inlet (Top)
Liquid Level indicator with gauge board,
& high visibility target - full travel -
Metric display (mechanical, float-type)

TREATED WATER HOLDING TANK AND FOUNDATION- PLAN

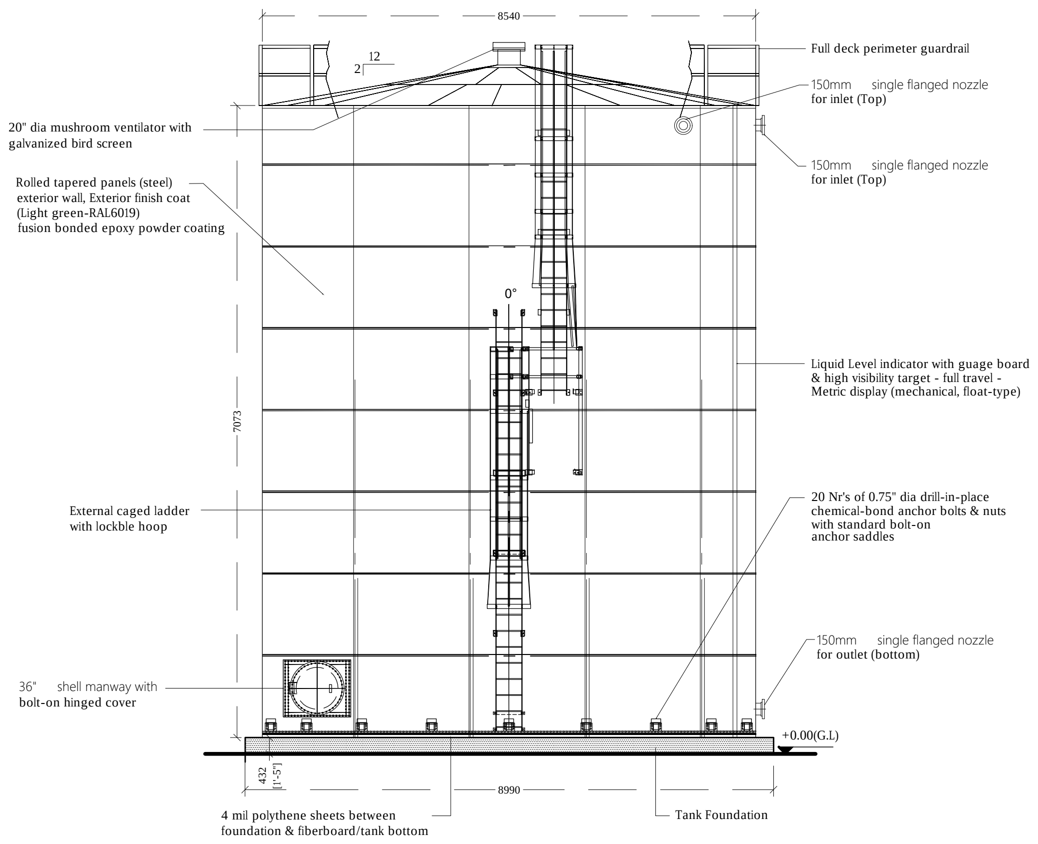
8540
12
2
Full deck perimeter guardrail
150mm single flanged nozzle
for inlet (Top)
20" dia mushroom ventilator with
galvanized bird screen
150mm single flanged nozzle
for inlet (Top)
Rolled tapered panels (steel)
exterior wall, Exterior finish coat
(Light green-RAL6019)
fusion bonded epoxy powder coating
0°
7073
Liquid Level indicator with guage board
& high visibility target - full travel -
Metric display (mechanical, float-type)
External caged ladder
with lockable hoop
20 Nr's of 0.75" dia drill-in-place
chemical-bond anchor bolts & nuts
with standard bolt-on
anchor saddles
150mm single flanged nozzle
for outlet (bottom)
36" shell manway with
bolt-on hinged cover
+0.00(G.L)
432
[1'-5"]
8990
4 mil polythene sheets between
foundation & fiberboard/tank bottom
Tank Foundation

TREATED WATER HOLDING TANK AND FOUNDATION- ELEVATION

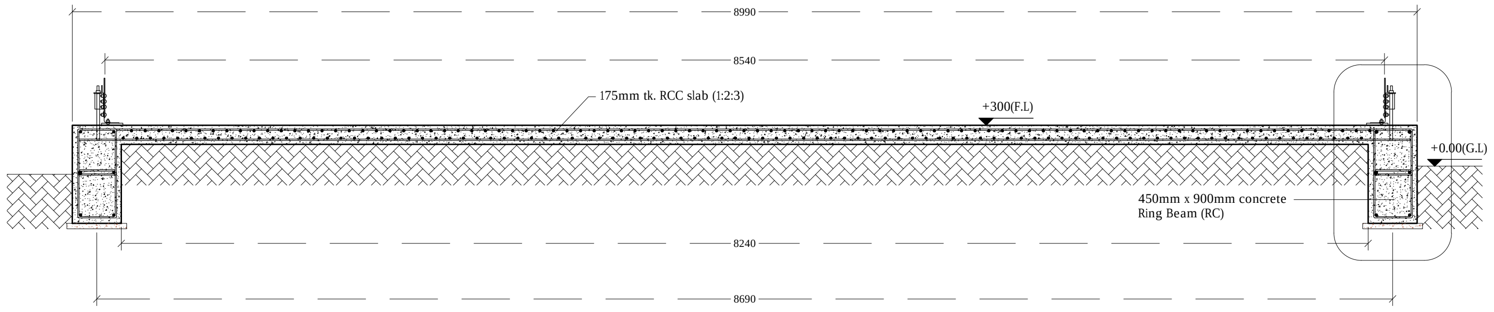
8990
8540
175mm tk. RCC slab (1:2:3)
+300(F.L)
+0.00(G.L)
450mm x 900mm concrete
Ring Beam (RC)
8240
8690

SECTION X-X

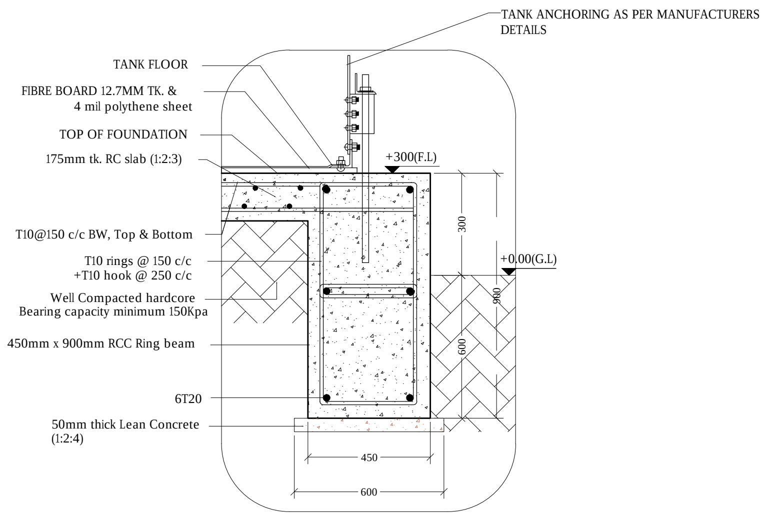
TANK ANCHORING AS PER MANUFACTURERS
DETAILS
TANK FLOOR
FIBRE BOARD 12.7MM TK. &
4 mil polythene sheet
TOP OF FOUNDATION
175mm tk. RC slab (1:2:3)
+300(F.L)
T10@150 c/c BW, Top & Bottom
T10 rings @ 150 c/c
+T10 hook @ 250 c/c
Well Compacted hardcore
Bearing capacity minimum 150Kpa
450mm x 900mm RCC Ring beam
6T20
50mm thick Lean Concrete
(1:2:4)
300
+0.00(G.L)
900
600
450
600

DETAIL

Note:-
Cover = 50mm
Lap length 50

TREATED WATER TANK DETAILS

NTS

Legend

Note:
-Orientation of tanks and pipe work to suit location.
-All structural concrete shall be of grade C30.
-All castings shall be done using sulphate resistant portland cement to BS 4027:1996.
-All structural reinforcement shall be epoxy coating of non-pre-stressed reinforcement to ASTM-A775/A775M.
-A cover of 75mm should be given for all reinforcements.
- All concrete cold joints shall casted with bonding agent.
-Tank foundation to be approved based on manufacturers recommendation.

R00	JUNE 2020	STAGE -1	PD	SBC	SD
REV. NO.	Date	Revision Description	Drawn	Chkd	Appd.

Title:
Consultancy Services for Survey, Design and EIA works of Water Supply and Sewerage Facilities in 6 islands, Maldives - Package 5

Sub Title:
Water Supply System in V. Keyodhoo

Client:
Ministry of National Planning, Housing and Infrastructure, Republic of Maldives

EPOCH ASSOCIATES
T: +960 333 3528
E: info@epoch.associates
W: wwww.epoch.associates
A: G. Rosary West,
Husnuheenaa Magu, Male', Maldives

FEEDBACK INFRA
Making Infrastructure Happen

Drawn: F.I.A.
Checked: M.S.S.
Designed: F.I.A.
Approved: I.W.
Date: Sep 2020
SCALE (A3): NTS
Project No: EP-WS/2019/05
Rev: R-01
Page: W-19

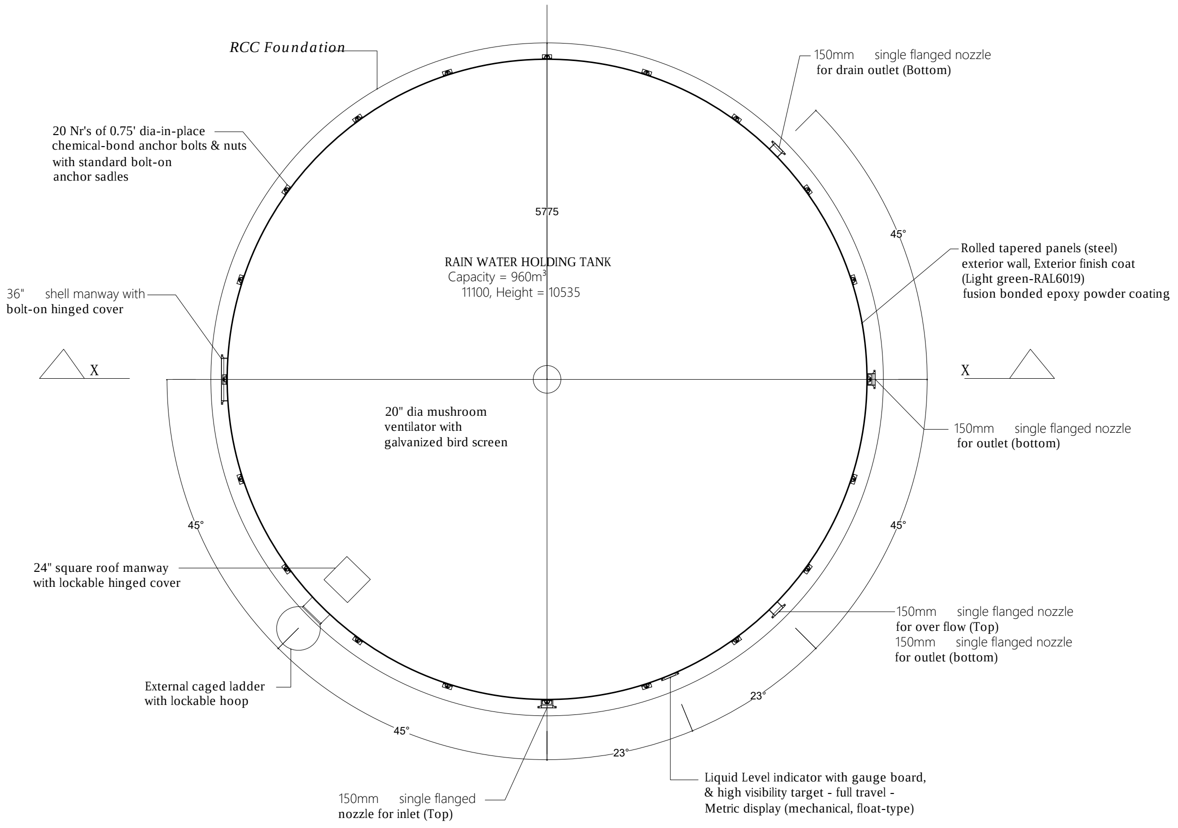
RCC Foundation
20 Nr's of 0.75' dia-in-place
chemical-bond anchor bolts & nuts
with standard bolt-on
anchor sadles
150mm single flanged nozzle
for drain outlet (Bottom)
5775
RAIN WATER HOLDING TANK
Capacity = 960m³
11100, Height = 10535
45°
Rolled tapered panels (steel)
exterior wall, Exterior finish coat
(Light green-RAL6019)
fusion bonded epoxy powder coating
36" shell manway with
bolt-on hinged cover
X
X
20" dia mushroom
ventilator with
galvanized bird screen
150mm single flanged nozzle
for outlet (bottom)
45°
45°
24" square roof manway
with lockable hinged cover
150mm single flanged nozzle
for over flow (Top)
150mm single flanged nozzle
for outlet (bottom)
External caged ladder
with lockable hoop
23°
45°
23°
150mm single flanged
nozzle for inlet (Top)
Liquid Level indicator with gauge board,
& high visibility target - full travel -
Metric display (mechanical, float-type)

RAINWATER HOLDING TANK AND FOUNDATION- PLAN

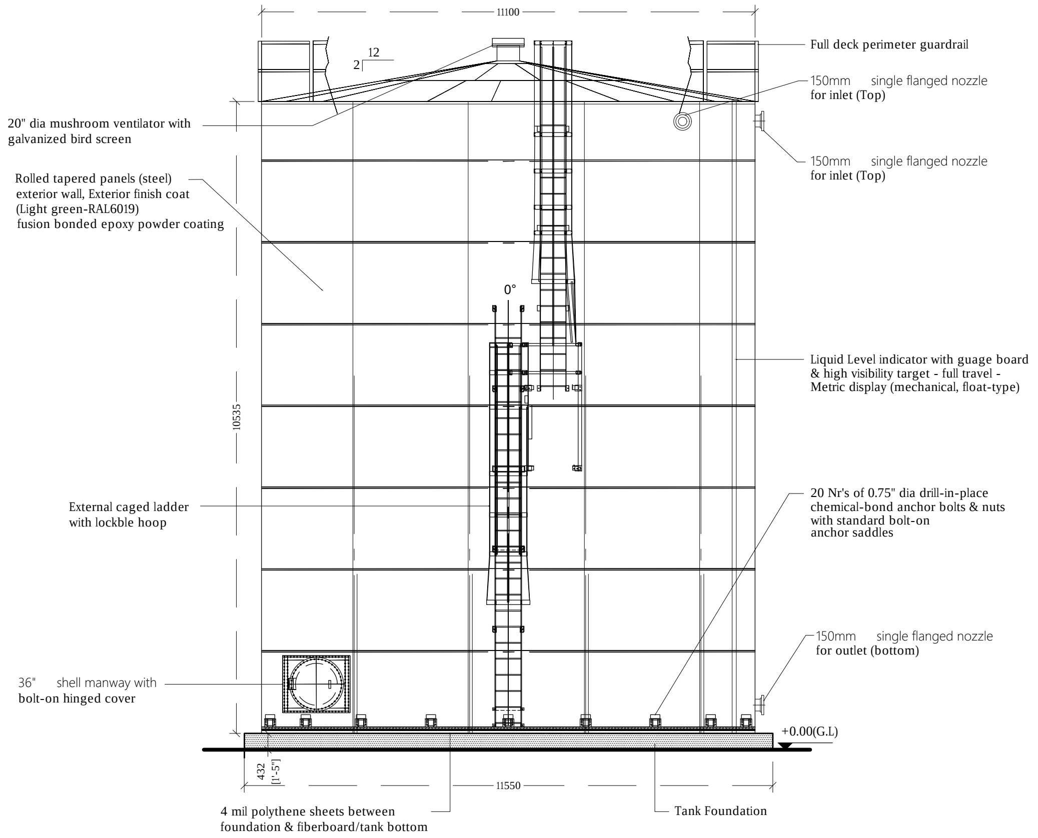
11100
12
2
Full deck perimeter guardrail
150mm single flanged nozzle
for inlet (Top)
20" dia mushroom ventilator with
galvanized bird screen
150mm single flanged nozzle
for inlet (Top)
Rolled tapered panels (steel)
exterior wall, Exterior finish coat
(Light green-RAL6019)
fusion bonded epoxy powder coating
0°
Liquid Level indicator with guage board
& high visibility target - full travel -
Metric display (mechanical, float-type)
10535
20 Nr's of 0.75" dia drill-in-place
chemical-bond anchor bolts & nuts
with standard bolt-on
anchor saddles
External caged ladder
with lockble hoop
150mm single flanged nozzle
for outlet (bottom)
36" shell manway with
bolt-on hinged cover
+0.00(G.L)
432
[1'-5"]
11550
4 mil polythene sheets between
foundation & fiberboard/tank bottom
Tank Foundation

RAINWATER HOLDING TANK AND FOUNDATION- ELEVATION

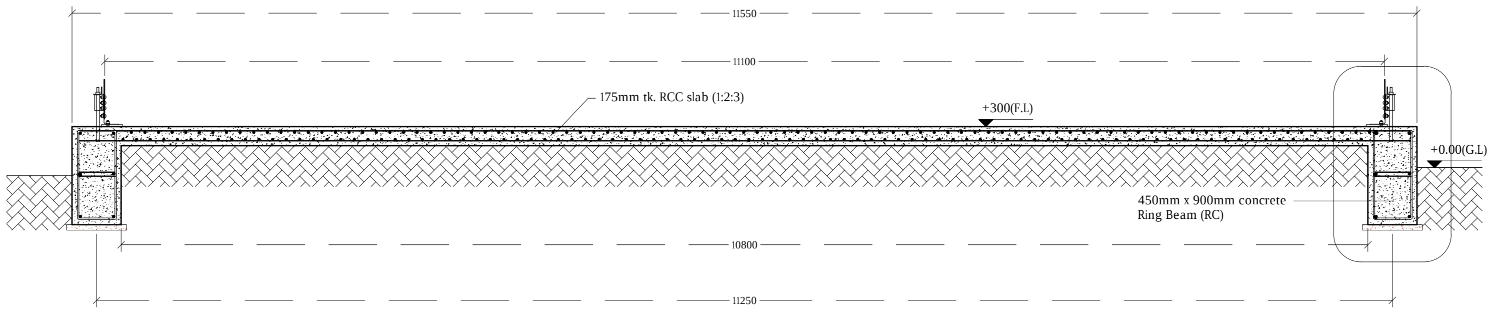
11550
11100
175mm tk. RCC slab (1:2:3)
+300(F.L)
+0.00(G.L)
450mm x 900mm concrete
Ring Beam (RC)
10800
11250

SECTION X-X

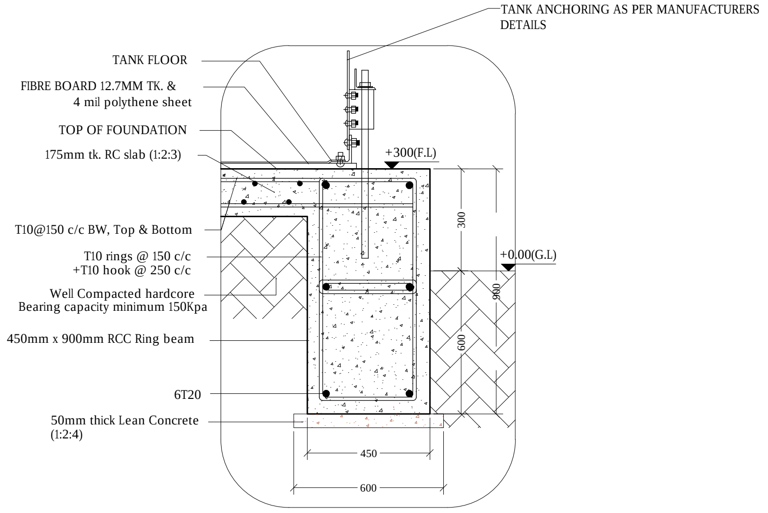
TANK ANCHORING AS PER MANUFACTURERS
DETAILS
TANK FLOOR
FIBRE BOARD 12.7MM TK. &
4 mil polythene sheet
TOP OF FOUNDATION
175mm tk. RC slab (1:2:3)
+300(F.L)
300
+0.00(G.L)
T10@150 c/c BW, Top & Bottom
T10 rings @ 150 c/c
+T10 hook @ 250 c/c
900
Well Compacted hardcore
Bearing capacity minimum 150Kpa
450mm x 900mm RCC Ring beam
600
6T20
50mm thick Lean Concrete
(1:2:4)
450
600

DETAIL

Note:-
Cover = 50mm
Lap length 50

RAINWATER HOLDING TANK DETAILS

NTS

Legend

Note:
-Orientation of tanks and pipe work to suit location.
-All structural concrete shall be of grade C30.
-All castings shall be done using sulphate resistant portland cement to BS 4027:1996.
-All structural reinforcement shall be epoxy coating of non-pre-stressed reinforcement to ASTM-A775/A775M.
-A cover of 75mm should be given for all reinforcements.
- All concrete cold joints shall casted with bonding agent.
-Tank foundation to be approved based on manufacturers recommendation.

REV. NO.	Date	Revision Description	Drawn	Chkd	Appd.
R00	JUNE 2020	STAGE -1	PD	SBC	SD

Title:
Consultancy Services for Survey, Design and EIA works of Water Supply and Sewerage Facilities in 6 islands, Maldives - Package 5

Sub Title:
Water Supply System in V. Keyodhoo

Client:
Ministry of National Planning, Housing and Infrastructure, Republic of Maldives

EPOCH ASSOCIATES
T: +960 333 3528
E: info@epoch.associates
W: wwww.epoch.associates
A: G. Rosary West,
Husnuheenaa Magu, Male', Maldives

FEEDBACK INFRA
Making Infrastructure Happen

Drawn:	F.I.A.	Checked:	M.S.S.
Designed:	F.I.A.	Approved:	I.W.
Date:	Sep 2020	SCALE (A3):	NTS

Project No: EP-WS/2019/05

Rev: R-01

Page: W-20

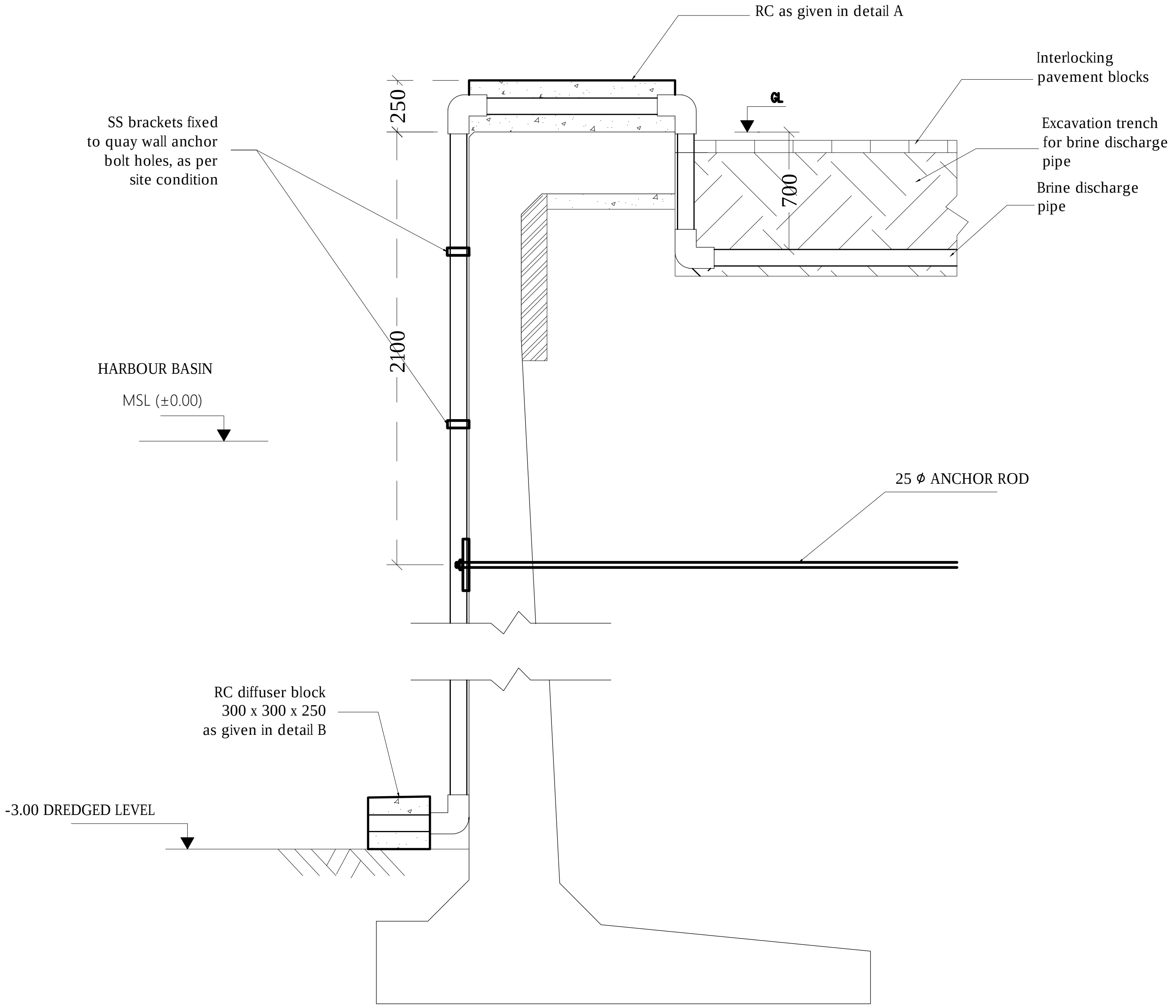
RC as given in detail A
Interlocking
pavement blocks
GL
Excavation trench
for brine discharge
pipe
Brine discharge
pipe
SS brackets fixed
to quay wall anchor
bolt holes, as per
site condition
250
700
2100
HARBOUR BASIN
MSL (±0.00)
25 ϕ ANCHOR ROD
RC diffuser block
300 x 300 x 250
as given in detail B
-3.00 DREDGED LEVEL

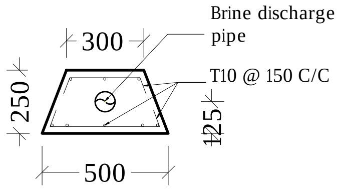
300
Brine discharge
pipe
T10 @ 150 C/C
250
125
500

Detail A

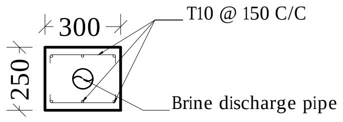
300
T10 @ 150 C/C
250
Brine discharge pipe

Detail B

BRINE HARBOUR DISCHARGE DETAILS

NTS

Legend

Notes:

- All backing rings for stub flanges , nuts and bolts shall be grade 316 stainless steel.
- All pipe work shall be bedded on 10mm thick neoprene rubber seat in semicircular recess matching the O.D. the pipe.
- Fabricate specific pipe clamps to provide firm clamping action according to pipe O.D.
- All structural concrete shall be of grade C40A.
- All castings shall be done using sulphate resistant portland cement to BS 4027:1996.
- All structural reinforcement shall be epoxy coating of non-pre-stressed reinforcement to ASTM-A775/A775M.
- A cover of 75mm should be given for all reinforcements.
- All pipe connections to be placed inside the ballast blocks.

R00	JUNE 2020	STAGE -1	PD	SBC	SD
REV. NO.	Date	Revision Description	Drawn	Chkd	Appd.

Title:
Consultancy Services for Survey, Design and EIA works of Water Supply and Sewerage Facilities in 6 islands, Maldives - Package 5

Sub Title:
Water Supply System in V. Keyodhoo

Client:
Ministry of National Planning, Housing and Infrastructure, Republic of Maldives

EPOCH ASSOCIATES
T: +960 333 3528
E: info@epoch.associates
W: wwww.epoch.associates
A: G. Rosary West,
Husnuheenaa Magu, Male', Maldives

FEEDBACK INFRA

Drawn: F.I.A.
Checked: M.S.S.
Designed: F.I.A.
Approved: I.W.
Date: Sep 2020
SCALE (A3): NTS
Project No: EP-WS/2019/05
Rev: R-01
Page: W-21

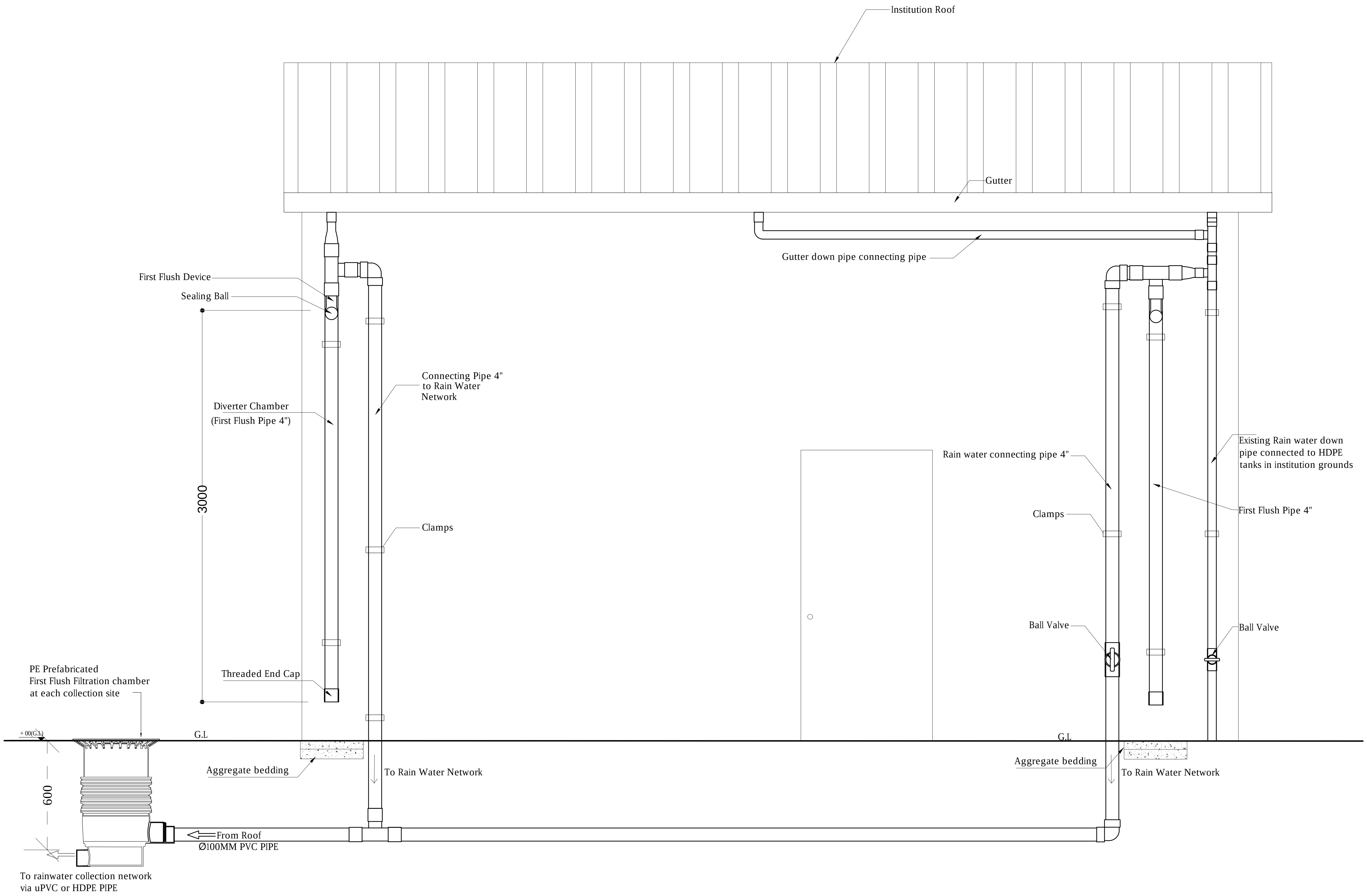
Institution Roof
Gutter
Gutter down pipe connecting pipe
First Flush Device
Sealing Ball
3000
Diverter Chamber
(First Flush Pipe 4")
Connecting Pipe 4"
to Rain Water
Network
Clamps
Threaded End Cap
PE Prefabricated
First Flush Filtration chamber
at each collection site
+ 00(G.L)
G.L
600
Aggregate bedding
To Rain Water Network
From Roof
Ø100MM PVC PIPE
To rainwater collection network
via uPVC or HDPE PIPE
Rain water connecting pipe 4"
Existing Rain water down
pipe connected to HDPE
tanks in institution grounds
First Flush Pipe 4"
Clamps
Ball Valve
Ball Valve
G.L
Aggregate bedding
To Rain Water Network

RAINWATER FIRST FLUSH MECHANISM

NTS

Legend

Notes:

- Prefab filtration chambers will be used as first flush mechanism.
- Filtration chambers suppliers to be approved by engineer.
- Number of chambers will be based on approved manufacturers roof area recommendations.
- Overflow mechanism will be installed on only corner down pipes or where necessary.
- All down pipes are 3 inch dia PVC pipes.
- The filtration chamber will have a screen to prevent entry of debris and dirt.
- Clamps and hangers shall be fixed at 1.5m intervals.

R00	JUNE 2020	STAGE -1	PD	SBC	SD
REV. NO.	Date	Revision Description	Drawn	Chkd	Appd.

Title:

Consultancy Services for Survey, Design and EIA works of Water Supply and Sewerage Facilities in 6 islands, Maldives - Package 5

Sub Title:

Water Supply System in V. Keyodhoo

Client:

Ministry of National Planning, Housing and Infrastructure, Republic of Maldives

T: +960 333 3528
E: info@epoch.associates
W: wwww.epoch.associates
A: G. Rosary West,
Husnuheenaa Magu, Male', Maldives

Making Infrastructure Happen

Drawn: F.I.A.
Checked: M.S.S.
Designed: F.I.A.
Approved: I.W.
Date: Sep 2020
SCALE (A3): NTS
Project No: EP-WS/2019/05
Rev: R-01
Page: W-22

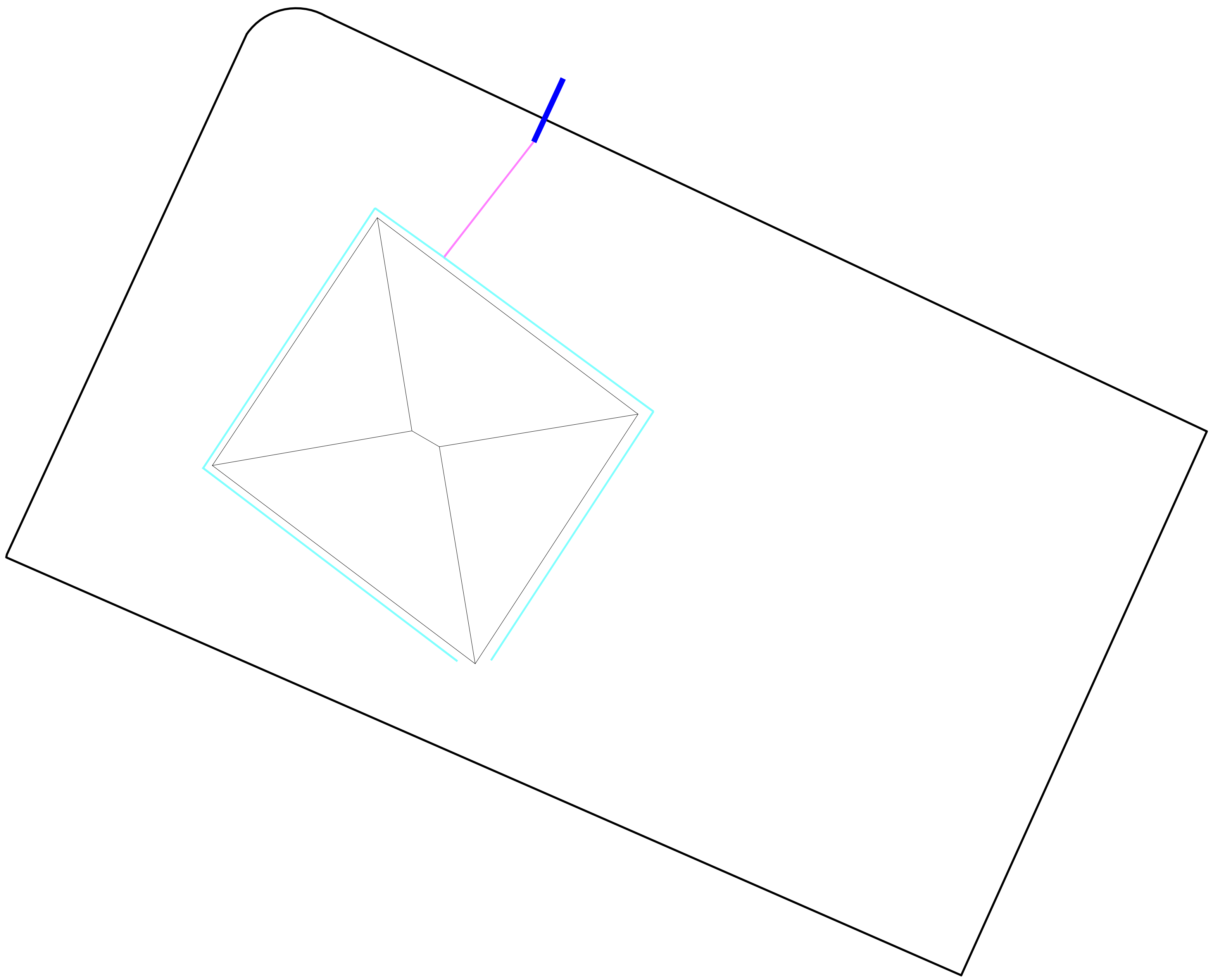

INTERNAL NETWORK LAYOUT- MOSQUE

1:400

N

Legend

— = PVC PIPES Ø160mm

— = PVC PIPES Ø110mm

Notes:
- Shop drawings to be produced based on site location for engineers approval.

-Approximate Network Length = 97m

-Approximate Gutter Length = 85m

-Approximate Pipe Network Length (Diameter 160mm) = 10m

-Approximate Pipe Network Length (Diameter 110mm) = 87m

R00	JUNE 2020	STAGE -1	PD	SBC	SD
REV. NO.	Date	Revision Description	Drawn	Chkd	Appd.

Title:
Consultancy Services for Survey, Design and EIA works of Water Supply and Sewerage Facilities in 6 islands, Maldives - Package 5

Sub Title:
Water Supply System in V. Keyodhoo

Client:
Ministry of National Planning, Housing and Infrastructure, Republic of Maldives

EPOCH ASSOCIATES
T: +960 333 3528
E: info@epoch.associates
W: wwww.epoch.associates
A: G. Rosary West,
Husnuheenaa Magu, Male', Maldives

FEEDBACK INFRA
Making Infrastructure Happen

Drawn: F.I.A.
Checked: M.S.S.
Designed: F.I.A.
Approved: I.W.
Date: Sep 2020
SCALE (A3): 1:400
Project No: EP-WS/2019/05
Rev: R-01
Page: W-23

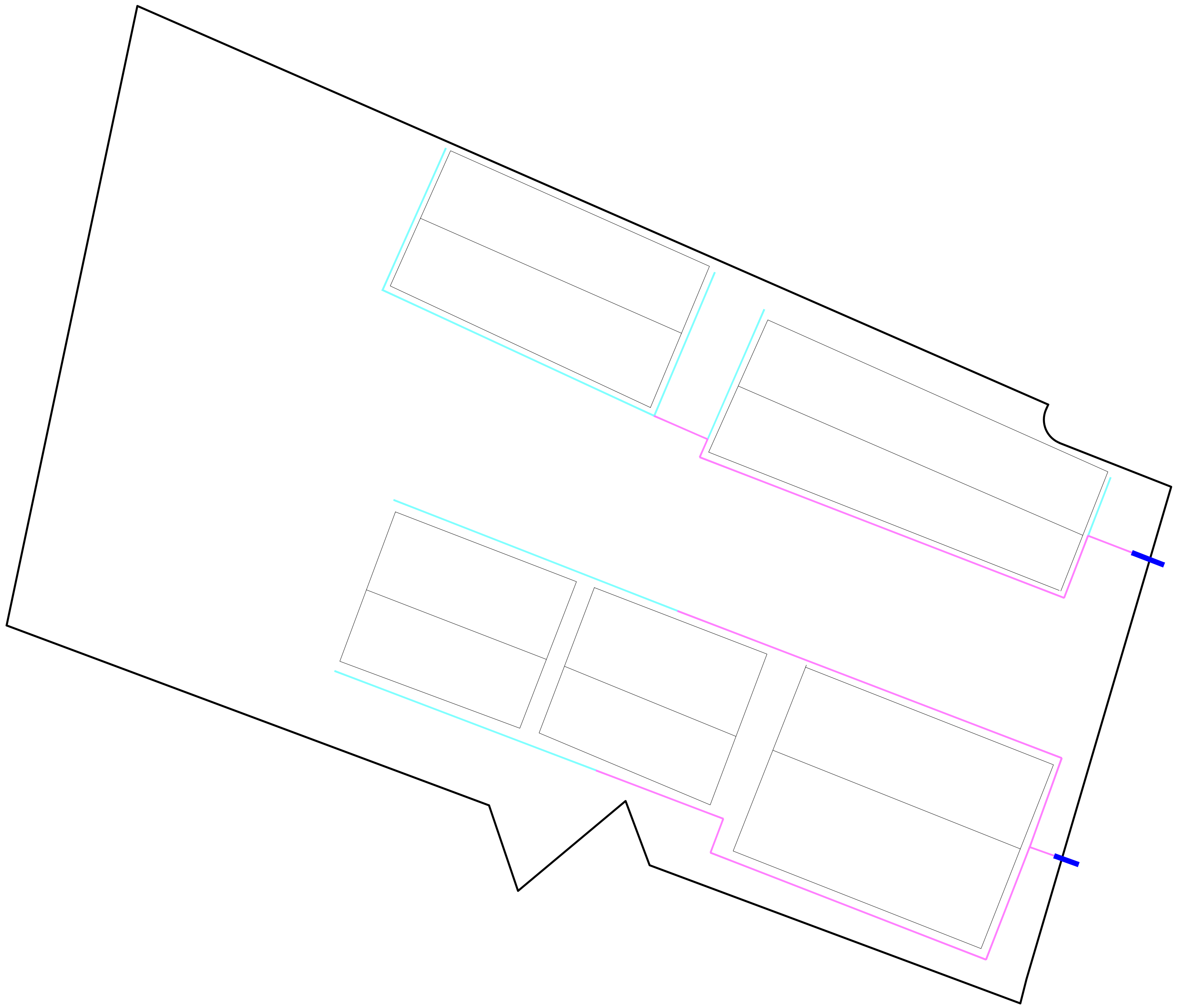

INTERNAL NETWORK LAYOUT- KEYODHOO SCHOOL

1:400

Legend

— = PVC PIPES Ø160mm

— = PVC PIPES Ø110mm

Notes:
- Shop drawings to be produced based on site location for engineers approval.

-Approximate Network Length = 222m

-Approximate Gutter Length = 187m

-Approximate Pipe Network Length (Diameter 160mm) = 122m

-Approximate Pipe Network Length (Diameter 110mm) = 100m

R00	JUNE 2020	STAGE -1	PD	SBC	SD
REV. NO.	Date	Revision Description	Drawn	Chkd	Appd.

Title:

Consultancy Services for Survey, Design and EIA works of Water Supply and Sewerage Facilities in 6 islands, Maldives - Package 5

Sub Title:

Water Supply System in V. Keyodhoo

Client:

Ministry of National Planning, Housing and Infrastructure, Republic of Maldives

T: +960 333 3528
E: info@epoch.associates
W: wwww.epoch.associates
A: G. Rosary West,
Husnuheenaa Magu, Male', Maldives

Drawn:	F.I.A.	Checked:	M.S.S.
Designed:	F.I.A.	Approved:	I.W.
Date:	Sep 2020	SCALE (A3):	1:400

Project No: EP-WS/2019/05

Rev: R-01

Page: W-24

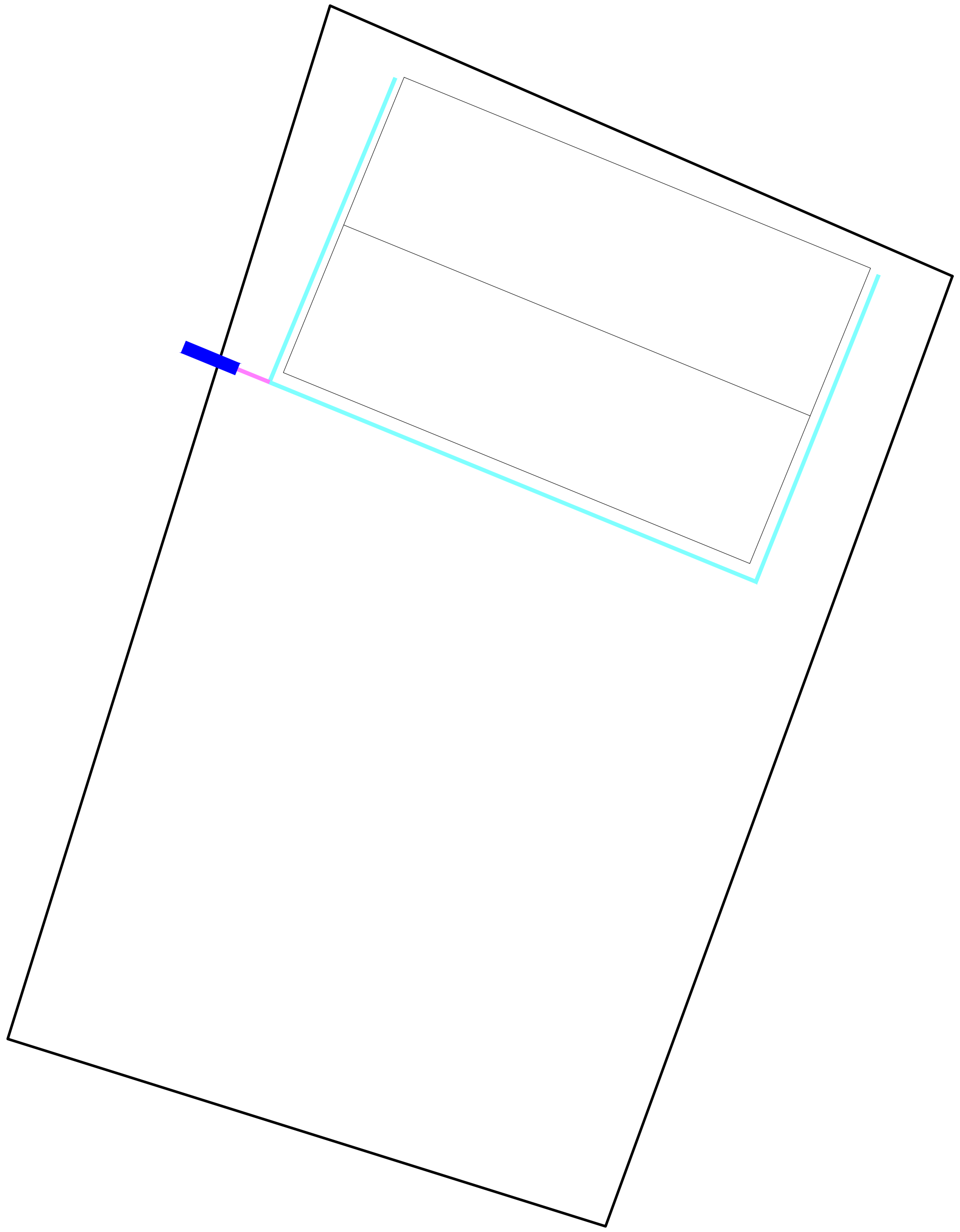

INTERNAL NETWORK LAYOUT- PRESCHOOL

1:200

Legend

—— = PVC PIPES Ø160mm

—— = PVC PIPES Ø110mm

Notes:
- Shop drawings to be produced based on site location for engineers approval.

-Approximate Network Length = 34m

-Approximate Gutter Length = 28m

-Approximate Pipe Network Length (Diameter 160mm) = 1m

-Approximate Pipe Network Length (Diameter 110mm) = 33m

REV. NO.	Date	Revision Description	Drawn	Chkd	Appd.
R00	JUNE 2020	STAGE -1	PD	SBC	SD

Title:
Consultancy Services for Survey, Design and EIA works of Water Supply and Sewerage Facilities in 6 islands, Maldives - Package 5

Sub Title:
Water Supply System in V. Keyodhoo

Client:
Ministry of National Planning, Housing and Infrastructure, Republic of Maldives

T: +960 333 3528
E: info@epoch.associates
W: wwww.epoch.associates
A: G. Rosary West,
Husnuheenaa Magu, Male', Maldives

Drawn:	F.I.A.	Checked:	M.S.S.
Designed:	F.I.A.	Approved:	I.W.
Date:	Sep 2020	SCALE (A3):	1:200

Project No: EP-WS/2019/05

Rev: R-01

Page: W-25

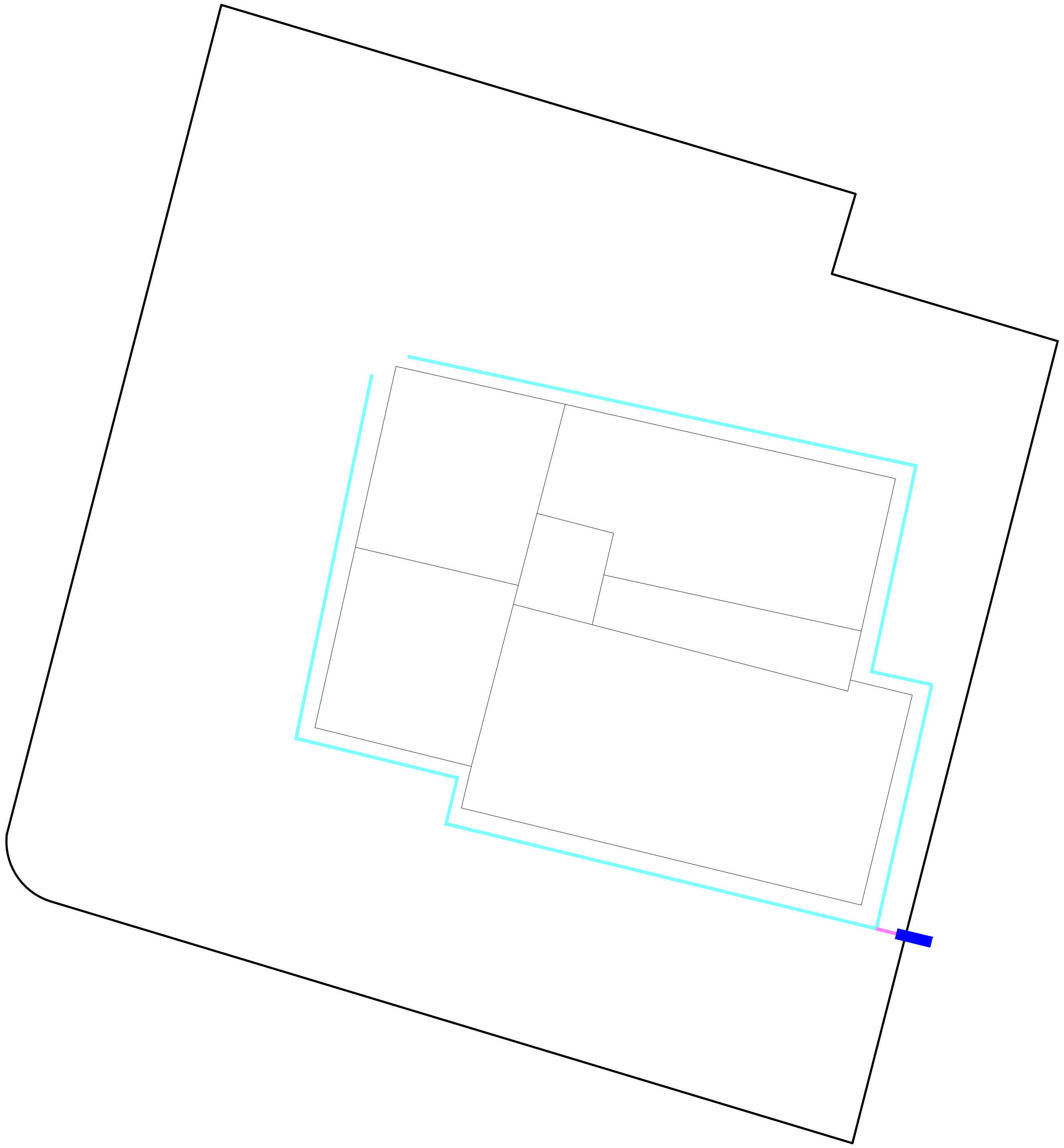

INTERNAL NETWORK LAYOUT- HEALTH CENTER

1:200

Legend

= PVC PIPES Ø160mm

= PVC PIPES Ø110mm

Notes:
- Shop drawings to be produced based on site location for engineers approval.

-Approximate Network Length = 69m

-Approximate Gutter Length = 65m

-Approximate Pipe Network Length (Diameter 160mm) = 1m

-Approximate Pipe Network Length (Diameter 110mm) = 68m

R00	JUNE 2020	STAGE -1	PD	SBC	SD
REV. NO.	Date	Revision Description	Drawn	Chkd	Appd.

Title:

Consultancy Services for Survey, Design and EIA works of Water Supply and Sewerage Facilities in 6 islands, Maldives - Package 5

Sub Title:

Water Supply System in V. Keyodhoo

Client:

Ministry of National Planning, Housing and Infrastructure, Republic of Maldives

T: +960 333 3528
E: info@epoch.associates
W: wwww.epoch.associates
A: G. Rosary West,
Husnuheenaa Magu, Male', Maldives

Drawn: F.I.A.	Checked: M.S.S.
Designed: F.I.A.	Approved: I.W.
Date: Sep 2020	SCALE (A3): 1:200

Project No: EP-WS/2019/05

Rev: R-01

Page: W-26

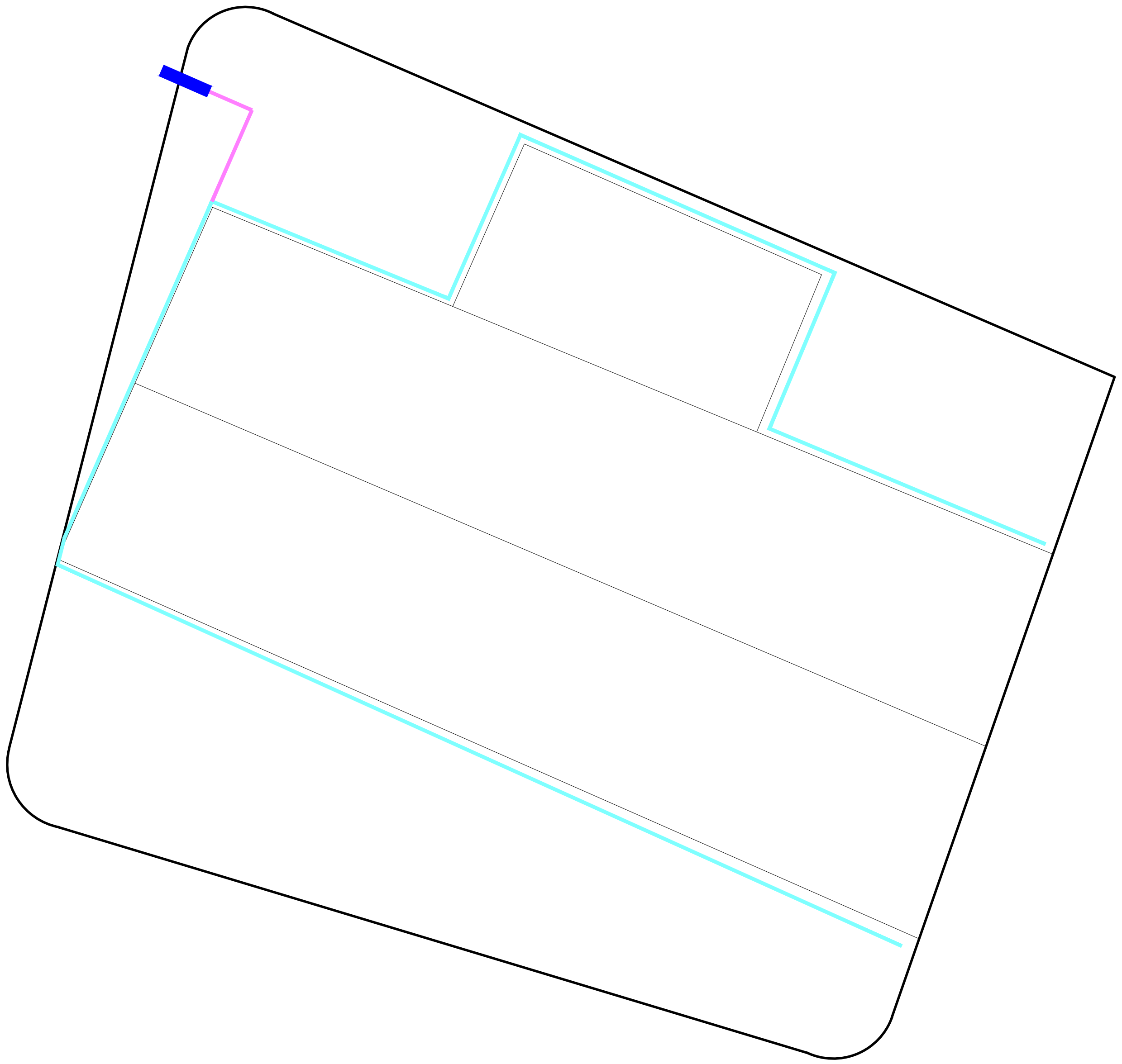

INTERNAL NETWORK LAYOUT- COUNCIL OFFICE

1:200

Legend

— = PVC PIPES Ø160mm

— = PVC PIPES Ø110mm

Notes:
- Shop drawings to be produced based on site location for engineers approval.

-Approximate Network Length = 79m

-Approximate Gutter Length = 64m

-Approximate Pipe Network Length (Diameter 160mm) = 4m

-Approximate Pipe Network Length (Diameter 110mm) = 75m

R00	JUNE 2020	STAGE -1	PD	SBC	SD
REV. NO.	Date	Revision Description	Drawn	Chkd	Appd.

Title:
Consultancy Services for Survey, Design and EIA works of Water Supply and Sewerage Facilities in 6 islands, Maldives - Package 5

Sub Title:
Water Supply System in V. Keyodhoo

Client:
Ministry of National Planning, Housing and Infrastructure, Republic of Maldives

T: +960 333 3528
E: info@epoch.associates
W: wwww.epoch.associates
A: G. Rosary West,
Husnuheenaa Magu, Male', Maldives

Drawn: F.I.A.
Checked: M.S.S.
Designed: F.I.A.
Approved: I.W.
Date: Sep 2020
SCALE (A3): 1:200
Project No: EP-WS/2019/05
Rev: R-01
Page: W-27

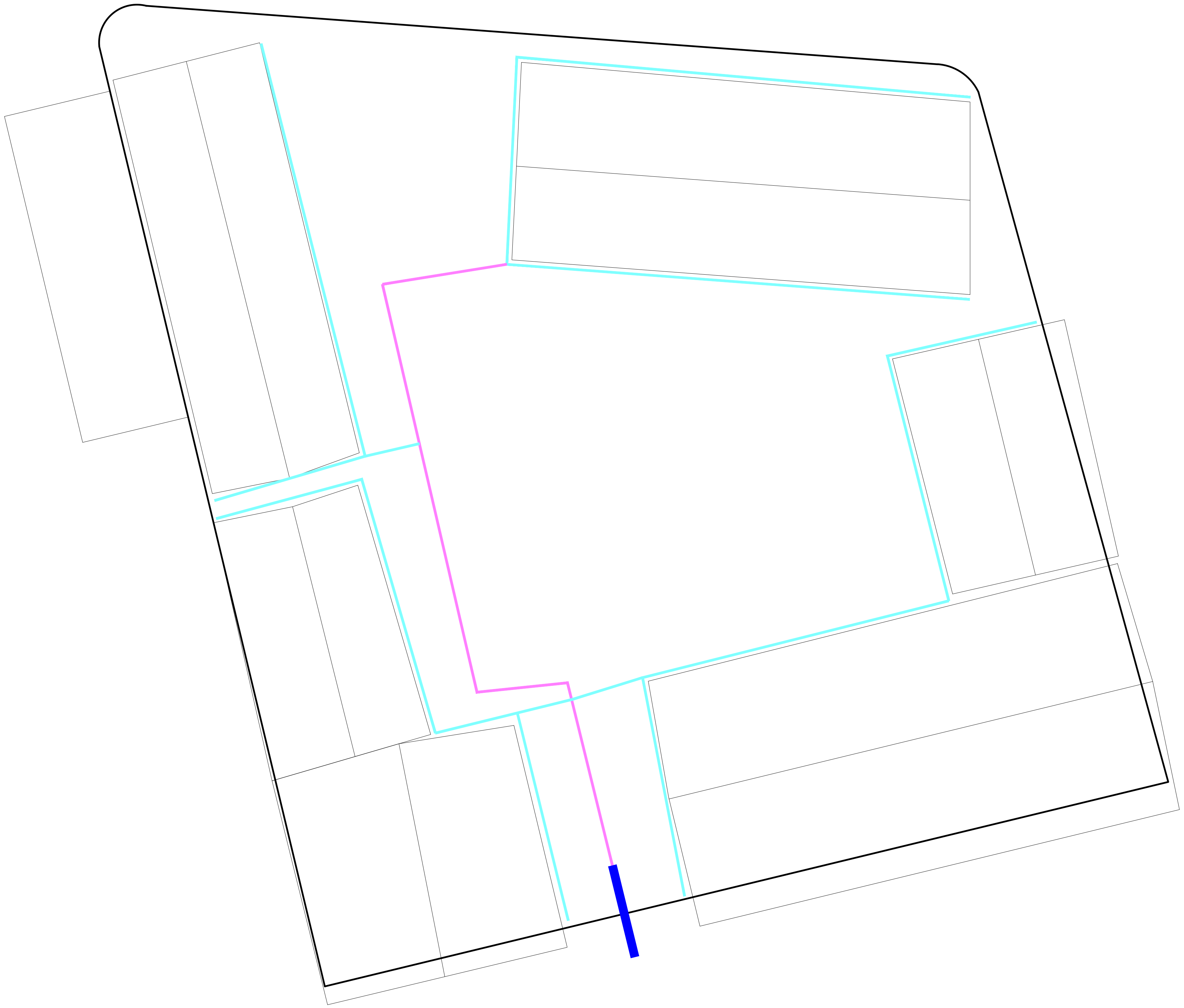

INTERNAL NETWORK LAYOUT- SOCIAL CENTER

1:200

N

Legend

— = PVC PIPES Ø160mm

— = PVC PIPES Ø110mm

Notes:
- Shop drawings to be produced based on site location for engineers approval.

-Approximate Network Length = 181m

-Approximate Gutter Length = 175m

-Approximate Pipe Network Length (Diameter 160mm) = 34m

-Approximate Pipe Network Length (Diameter 110mm) = 147m

R00	JUNE 2020	STAGE -1	PD	SBC	SD
REV. NO.	Date	Revision Description	Drawn	Chkd	Appd.

Title:
Consultancy Services for Survey, Design and EIA works of Water Supply and Sewerage Facilities in 6 islands, Maldives - Package 5

Sub Title:
Water Supply System in V. Keyodhoo

Client:
Ministry of National Planning, Housing and Infrastructure, Republic of Maldives

EPOCH ASSOCIATES
T: +960 333 3528
E: info@epoch.associates
W: wwww.epoch.associates
A: G. Rosary West,
Husnuheenaa Magu, Male', Maldives

FEEDBACK INFRA
Making Infrastructure Happen

Drawn: F.I.A.
Checked: M.S.S.
Designed: F.I.A.
Approved: I.W.
Date: Sep 2020
SCALE (A3): 1:200
Project No: EP-WS/2019/05
Rev: R-01
Page: W-28

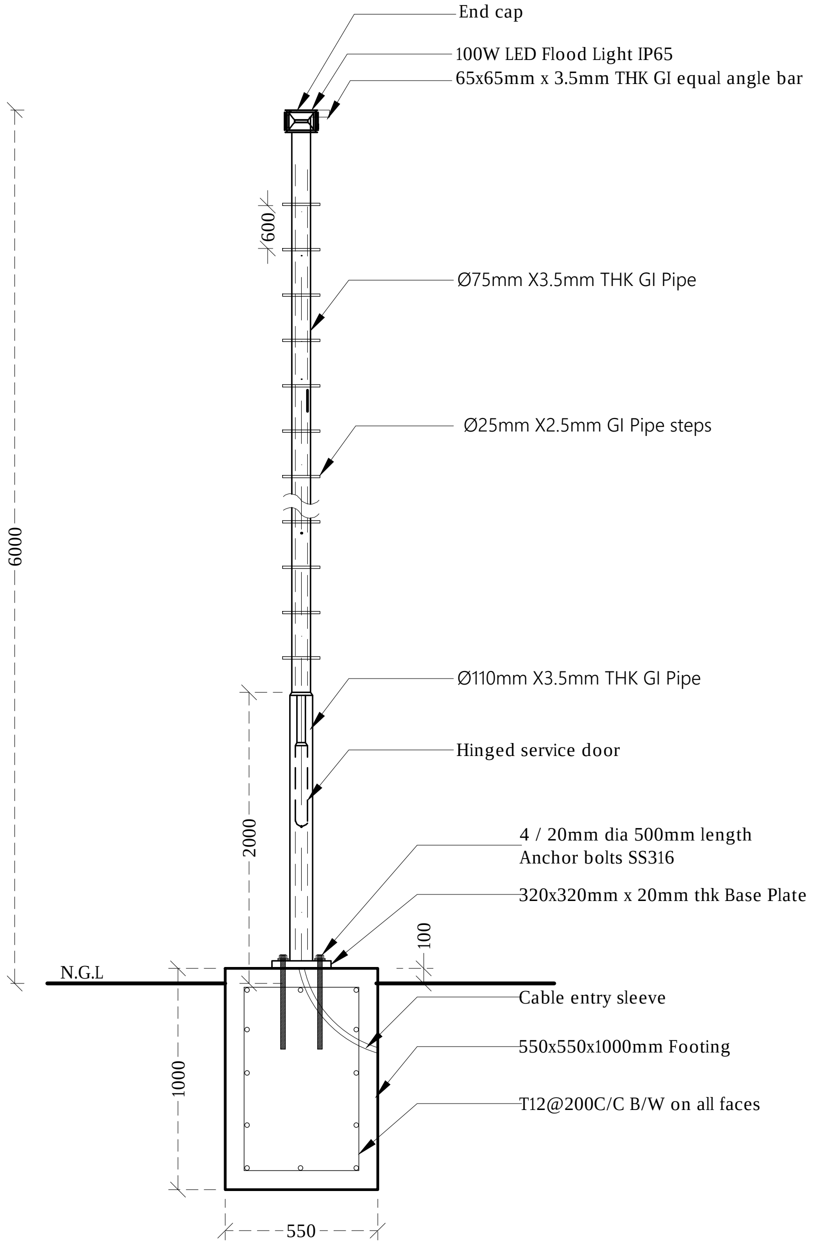
End cap
100W LED Flood Light IP65
65x65mm x 3.5mm THK GI equal angle bar
600
Ø75mm X3.5mm THK GI Pipe
Ø25mm X2.5mm GI Pipe steps
6000
Ø110mm X3.5mm THK GI Pipe
Hinged service door
2000
4 / 20mm dia 500mm length
Anchor bolts SS316
320x320mm x 20mm thk Base Plate
100
N.G.L
Cable entry sleeve
550x550x1000mm Footing
T12@200C/C B/W on all faces
1000
550

LIGHT POST DETAILS FOR STP COMPOUND (LP1)

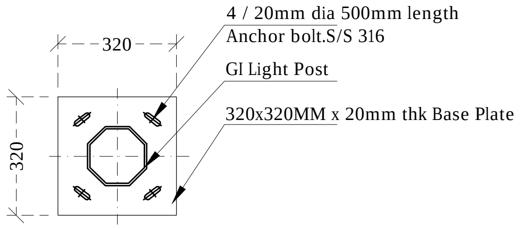
320
320
4 / 20mm dia 500mm length
Anchor bolt.S/S 316
GI Light Post
320x320MM x 20mm thk Base Plate

BASE PLATE (LP1)

LIGHT POST DETAILS

NTS

Legend

Notes:
-Light posts shall be galvanized (minimum 200 micron) and finished with epoxy paint.
All structural concrete shall be of grade C25.
-All castings shall be done using sulphate resistant portland cement to BS 4027:1996.
-All structural reinforcement shall be epoxy coating of non-pre-stressed reinforcement to ASTM-A775/A775M.
-A cover of 50mm should be given for all reinforcements.
-All steel members and GI SHS to be applied with 2 coats of anti-corrosive paint with epoxy finishing paint.
-All anchor bolts shall be SS316

R00	JUNE 2020	STAGE -1	PD	SBC	SD
REV. NO.	Date	Revision Description	Drawn	Chkd	Appd.

Title:
Consultancy Services for Survey, Design and EIA works of Water Supply and Sewerage Facilities in 6 islands, Maldives - Package 5

Sub Title:
Water Supply System in V. Keyodhoo

Client:
Ministry of National Planning, Housing and Infrastructure, Republic of Maldives

T: +960 333 3528
E: info@epoch.associates
W: wwww.epoch.associates
A: G. Rosary West,
Husnuheenaa Magu, Male', Maldives

Drawn: F.I.A.
Checked: M.S.S.
Designed: F.I.A.
Approved: I.W.
Date: Sep 2020
SCALE (A3): NTS
Project No: EP-WS/2019/05
Rev: R-01
Page: W-29

ARCHITECTURAL AND STRUCTURAL DRAWINGS OF

PROPOSED SINGLE STOREY BUILDING AT

RO PLANT ADMIN BUILDING AND VEHICLE SHED, V.KEYODHOO

CONTENTS

Location Plan A.1 (1)
Site Plan A.1 (2)

ARCHITECTURAL DRAWINGS (ADMIN BUILDING)

Ground Floor Plan A.2 (1)
Roof Plan A.2 (2)
Elevations A.3 (1)
Section A.4 (1)
Doors & Windows Schedule -1 A.5 (1)
Doors & Windows Schedule -2 A.5 (2)
Typical Ground Slab Detail A.D (1)
Typical Opening Detail A.D (1)
Typical Wall Construction Detail A.D (2)
Boundary Wall Detail A.D (3)
Gate Details A.D (4)

STRUCTURAL DRAWINGS (ADMIN BUILDING)

Column Layout Plan S.1 (1)
Foundation Plan S.2 (1)
Roof Beam Plan S.3 (1)
Roof Truss Plan S.3 (2)
Roof Framing Plan S.3 (3)
Structural Details S.D (1)
Truss Detail TR1 S.D (2)
Detail A S.D (3)

ARCHITECTURAL DRAWINGS (VEHICLE SHED)

Ground Floor Plan A.6 (1)
Roof Plan A.6 (1)
Elevations A.6 (2)
Section A.6 (2)

STRUCTURAL DRAWINGS (VEHICLE SHED)

Foundation Plan S.4 (1)
Roof Truss Plan S.4 (2)
Roof Framing Plan S.D (4)

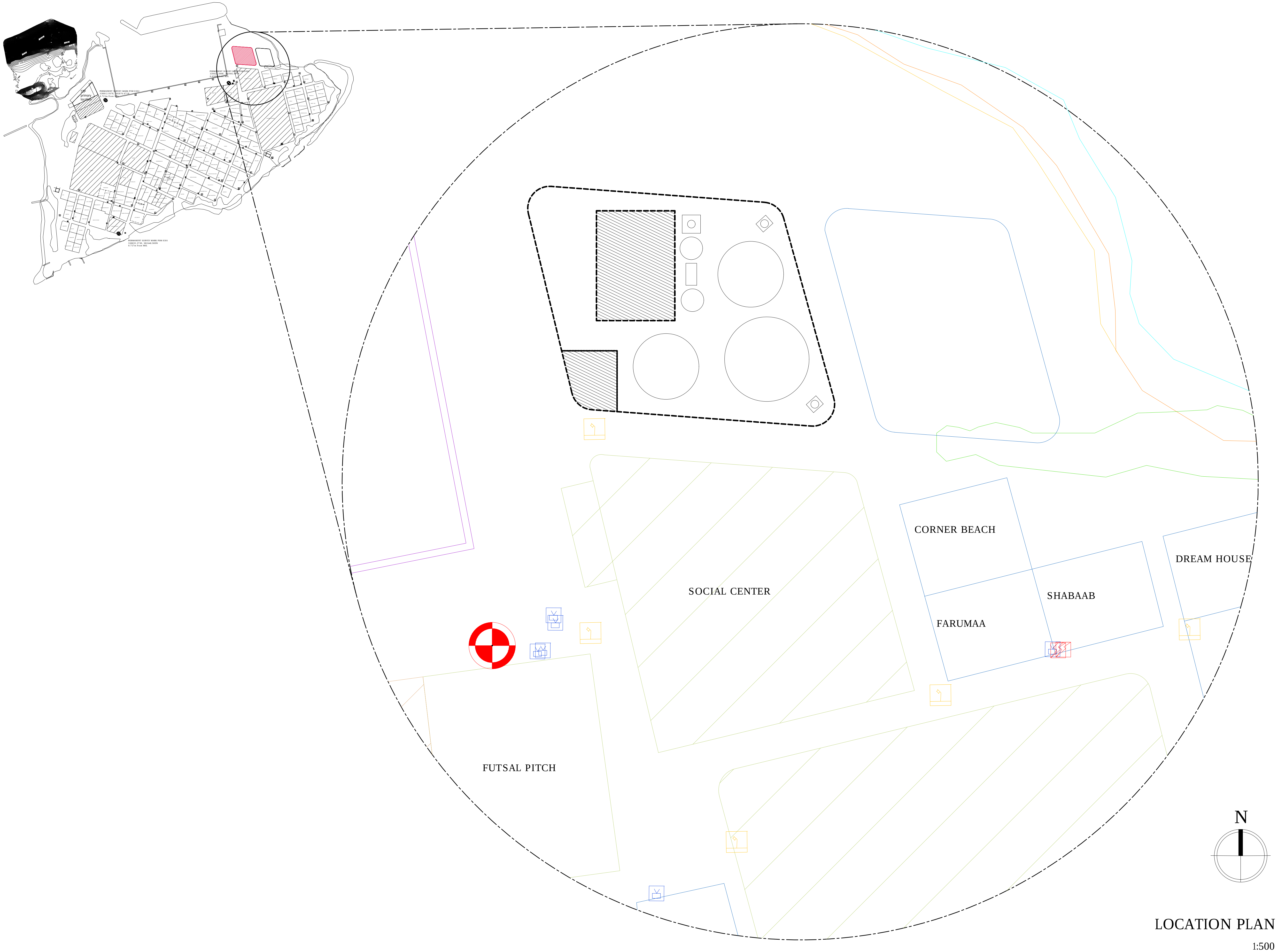

LOCATION PLAN

1:500

Legend

Note:

R01	NOV 2020		A.S.A.	F.I.A.	M.H.
REV. NO.	Date	Revision Description	Drawn	Chkd	Appd.

Title:
Consultancy Services for
Survey, Design and EIA works of
Water Supply and Sewerage
Facilities
in 6 Islands, Maldives – Package 5

Sub Title:
Water Supply System in V. Keyodhoo

Client:
Ministry of National Planning, Housing and
Infrastructure, Republic of Maldives

EPOCH ASSOCIATES
T: +960 333 3528
E: info@epoch.associates
W: wwww.epoch.associates
A: G. Rosary West,
Husnuheenaa Magu, Male', Maldives

FEEDBACK INFRA
Making Infrastructure Happen

Drawn: A.S.A.
Checked: F.I.A.
Designed: A.S.A.
Approved: M.H.
Date: Nov 2020
SCALE (A3): 1:500
Project No: EP-WS/2019/05
Rev: R-01
Page: A.1 (1)

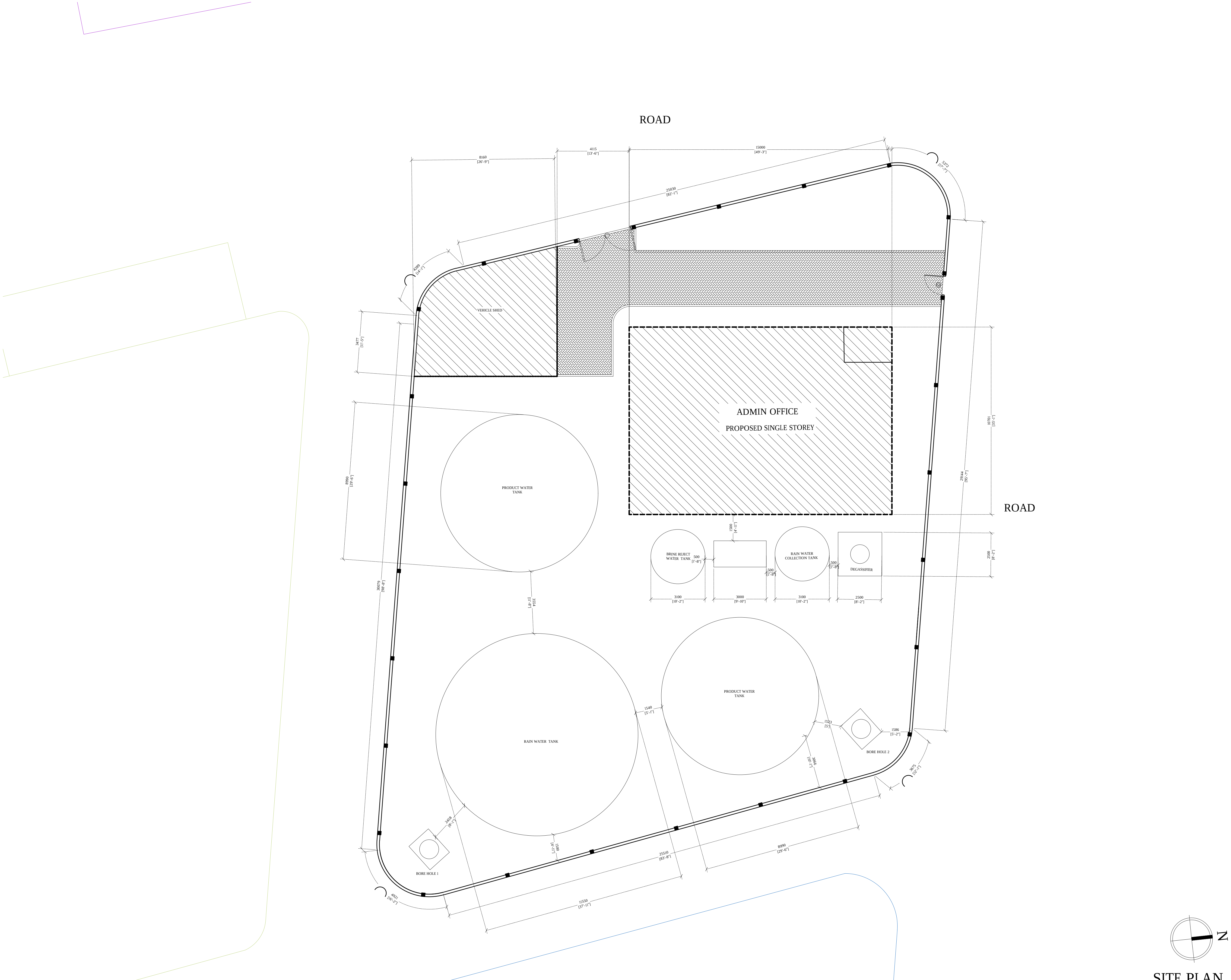
ROAD
ROAD
VEHICLE SHED
ADMIN OFFICE
PROPOSED SINGLE STOREY
PRODUCT WATER TANK
BRINE REJECT WATER TANK
RAIN WATER COLLECTION TANK
DEGASSIFIER
RAIN WATER TANK
PRODUCT WATER TANK
BORE HOLE 1
BORE HOLE 2
8160 [26'-9"]
4115 [13'-6"]
15000 [49'-3"]
25030 [82'-1"]
3477 [11'-5"]
8990 [29'-6"]
30079 [98'-8"]
10701 [35'-1"]
29344 [95'-7"]
2500 [8'-2"]
1500 [4'-11"]
500 [1'-8"]
500 [1'-8"]
500 [1'-8"]
3100 [10'-2"]
3000 [9'-10"]
3100 [10'-2"]
2500 [8'-2"]
1540 [5'-1"]
1586 [5'-2"]
25510 [83'-8"]
8990 [29'-6"]
11550 [37'-11"]
N

SITE PLAN

1:200

Legend

Note:

R01	NOV 2020		A.S.A.	F.I.A.	M.H.
REV. NO.	Date	Revision Description	Drawn	Chkd	Appd.

Title:

Consultancy Services for Survey, Design and EIA works of Water Supply and Sewerage Facilities in 6 Islands, Maldives – Package 5

Sub Title:

Water Supply System in V. Keyodhoo

Client:

Ministry of National Planning, Housing and Infrastructure, Republic of Maldives

EPOCH ASSOCIATES
T: +960 333 3528
E: info@epoch.associates
W: wwww.epoch.associates
A: G. Rosary West,
Husnuheenaa Magu, Male', Maldives

FEEDBACK INFRA
Making Infrastructure Happen

Drawn: A.S.A.
Checked: F.I.A.
Designed: A.S.A.
Approved: M.H.
Date: Nov 2020
SCALE (A3): 1:200
Project No: EP-WS/2019/05
Rev: R-01
Page: A.1 (2)

ARCHITECTURAL AND STRUCTURAL DRAWINGS OF

PROPOSED SINGLE STOREY BUILDING AT

RO PLANT ADMIN BUILDING, V.KEYODHOO

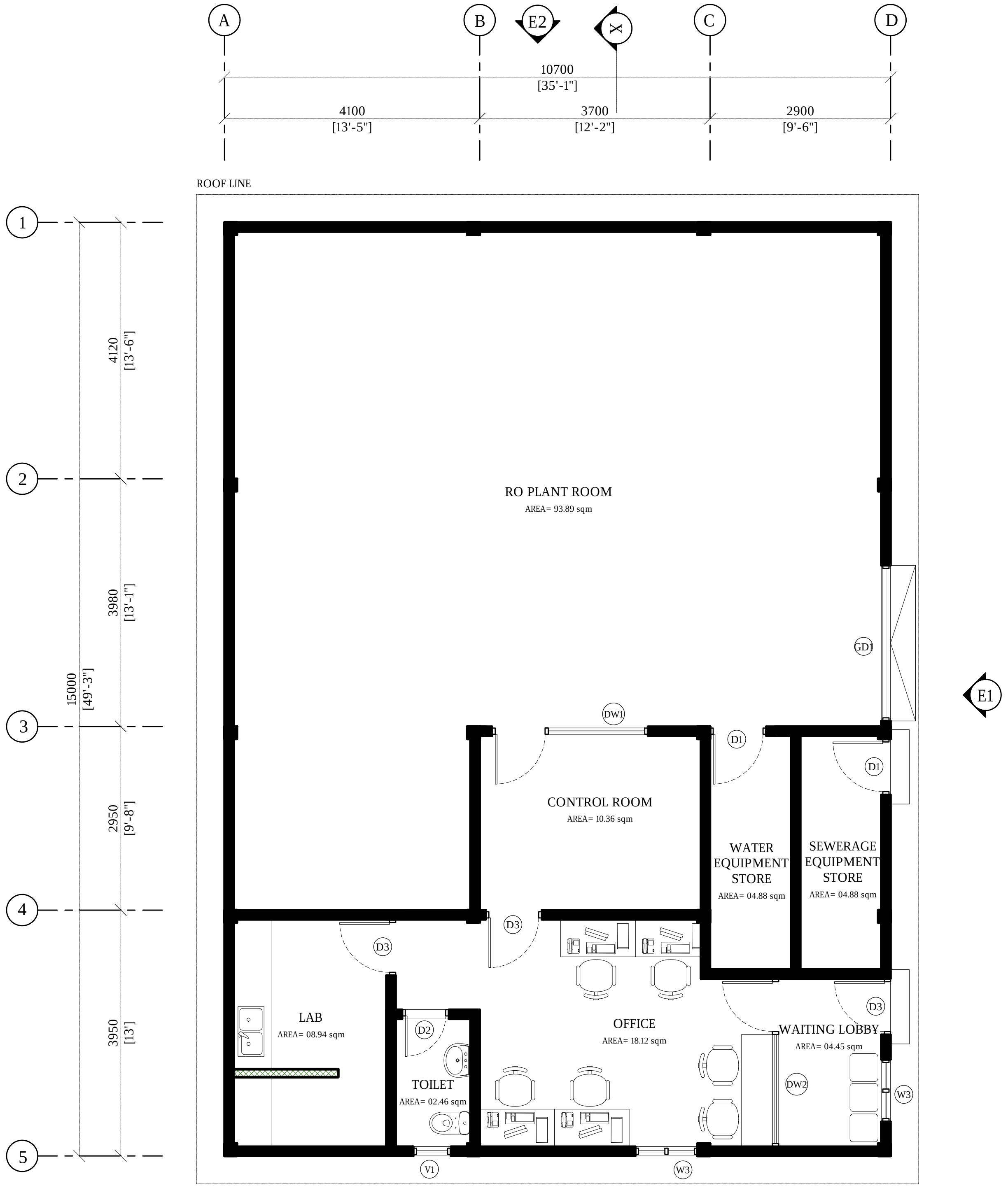
A
B
E2
X
C
D
10700
[35'-1"]
4100
[13'-5"]
3700
[12'-2"]
2900
[9'-6"]
ROOF LINE
1
2
3
4
5
4120
[13'-6"]
3980
[13'-1"]
15000
[49'-3"]
2950
[9'-8"]
3950
[13']
RO PLANT ROOM
AREA= 93.89 sqm
GD1
E1
DW1
D1
D1
CONTROL ROOM
AREA= 10.36 sqm
WATER EQUIPMENT STORE
AREA= 04.88 sqm
SEWERAGE EQUIPMENT STORE
AREA= 04.88 sqm
D3
D3
D3
LAB
AREA= 08.94 sqm
OFFICE
AREA= 18.12 sqm
WAITING LOBBY
AREA= 04.45 sqm
D2
TOILET
AREA= 02.46 sqm
DW2
W3
V1
W3

Wall Legend:

■	150mm thick masonry blocks with 20mm plaster on exterior and 12mm plaster on interior
▨	100mm thick partition walls up to ceiling level

Wall Finish:

Internal Wall Finish: Easy to wash odour-less Nippon paint Ivory White

External Wall Finish: Weathe rbond Algae guard Nippon September Cream

Toilet and shower walls: 300x300mm ceramic wall lanka tiles up to ceiling height with tile adhesive. use joint filler of appropriate color for grouting joints between tiles

Floor Finish:

Floor Finishes: 600x600mm homogenous floor tiles with tile adhesive unless specified

Toilet Floor Finishes: 300x300mm homogenous non skid floor tiles with tile adhesive unless specified

Notes:

FFL of balconies and toilets should be 25mm lower than the FFL of respective floors

Water proofing to be applied in toilets, balconies and roof terrace prior to tiling

N

GROUND FLOOR PLAN

1:100

Legend

Note:

R01	NOV 2020		A.S.A.	F.I.A.	M.H.
REV. NO.	Date	Revision Description	Drawn	Chkd	Appd.

Title:

Consultancy Services for Survey, Design and EIA works of Water Supply and Sewerage Facilities
in 6 Islands, Maldives – Package 5

Sub Title:
Water Supply System in V. Keyodhoo

Client:
Ministry of National Planning, Housing and Infrastructure, Republic of Maldives

EPOCH ASSOCIATES
T: +960 333 3528
E: info@epoch.associates
W: wwww.epoch.associates
A: G. Rosary West,
Husnuheenaa Magu, Male', Maldives

FEEDBACK INFRA
Making Infrastructure Happen

Drawn:	A.S.A.	Checked:	F.I.A.
Designed:	A.S.A.	Approved:	M.H.
Date:	Nov 2020	SCALE (A3):	1:100

Project No: EP-WS/2019/05

Rev: R-01

Page: A.2 (1)

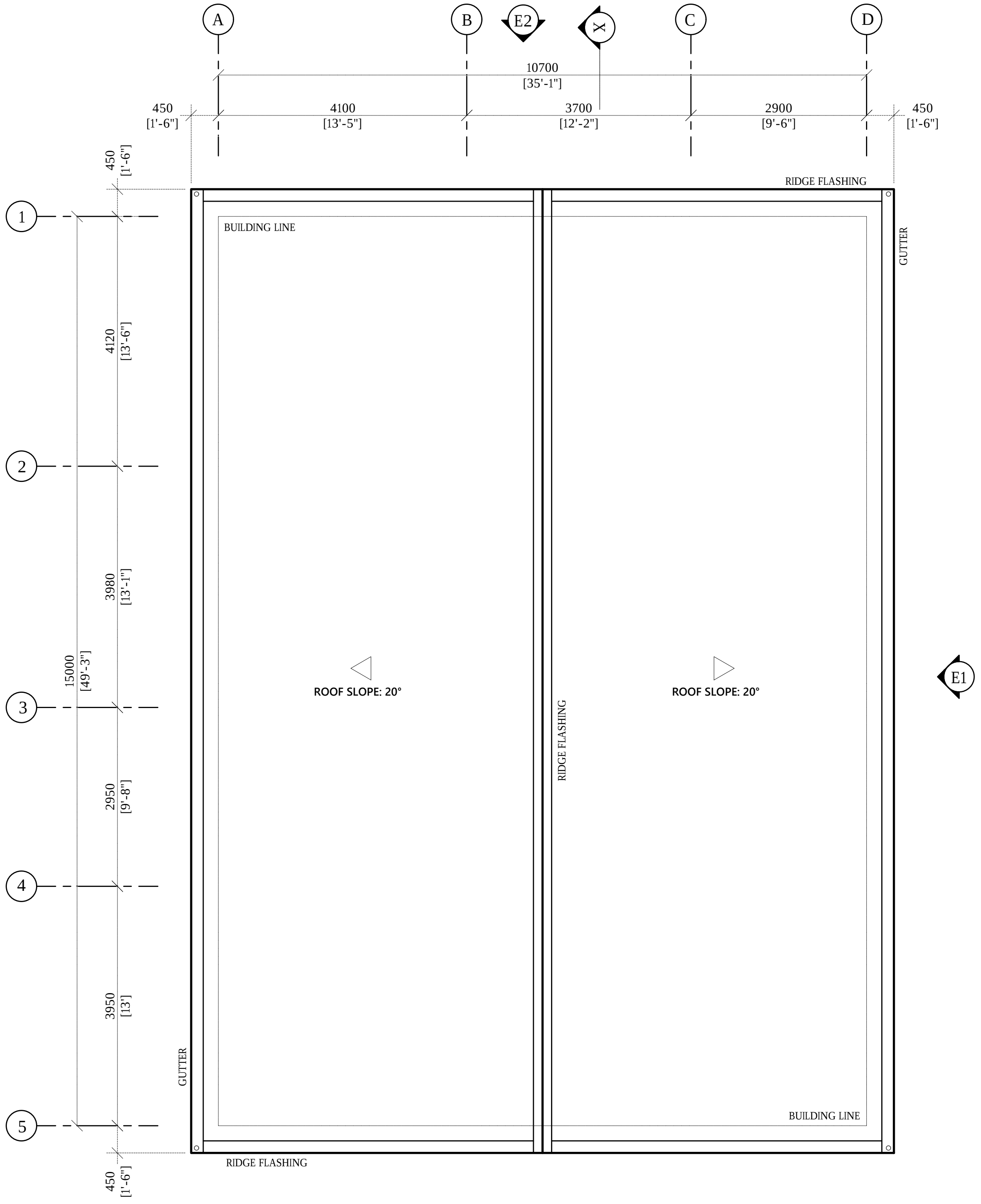
A
B
E2
X
C
D
10700
[35'-1"]
450
[1'-6"]
4100
[13'-5"]
3700
[12'-2"]
2900
[9'-6"]
450
[1'-6"]
450
[1'-6"]
RIDGE FLASHING
1
BUILDING LINE
GUTTER
4120
[13'-6"]
2
3980
[13'-1"]
15000
[49'-3"]
3
ROOF SLOPE: 20°
ROOF SLOPE: 20°
RIDGE FLASHING
E1
2950
[9'-8"]
4
3950
[13']
GUTTER
5
BUILDING LINE
RIDGE FLASHING
450
[1'-6"]

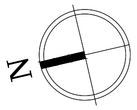

ROOF PLAN

1:100

Legend

Note:

REV. NO.	Date	Revision Description	Drawn	Chkd	Appd.
R01	NOV 2020		A.S.A.	F.I.A.	M.H.

Title:
Consultancy Services for Survey, Design and EIA works of Water Supply and Sewerage Facilities
in 6 Islands, Maldives – Package 5
Sub Title:
Water Supply System in V. Keyodhoo

Client:
Ministry of National Planning, Housing and Infrastructure, Republic of Maldives

EPOCH ASSOCIATES
T: +960 333 3528
E: info@epoch.associates
W: wwww.epoch.associates
A: G. Rosary West,
Husnuheenaa Magu, Male', Maldives

FEEDBACK INFRA
Making Infrastructure Happen

Drawn: A.S.A.
Checked: F.I.A.
Designed: A.S.A.
Approved: M.H.
Date: Nov 2020
SCALE (A3): 1:100
Project No: EP-WS/2019/05
Rev: R-01
Page: A.2 (2)

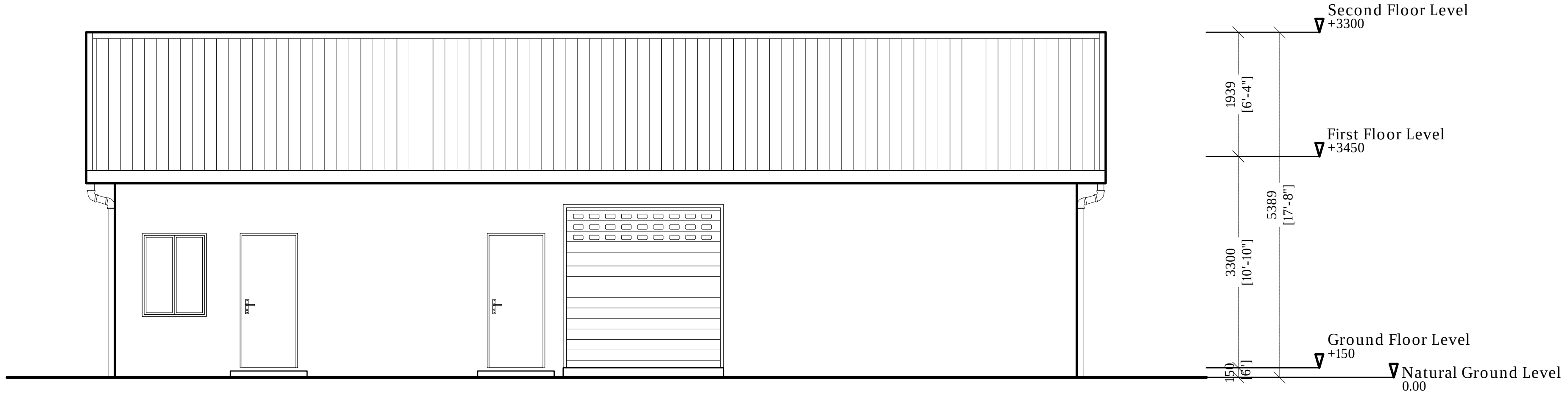
Second Floor Level
+3300
1939
[6'-4"]
First Floor Level
+3450
5389
[17'-8"]
3300
[10'-10"]
Ground Floor Level
+150
150
[6"]
Natural Ground Level
0.00

ELEVATION E1

1:100

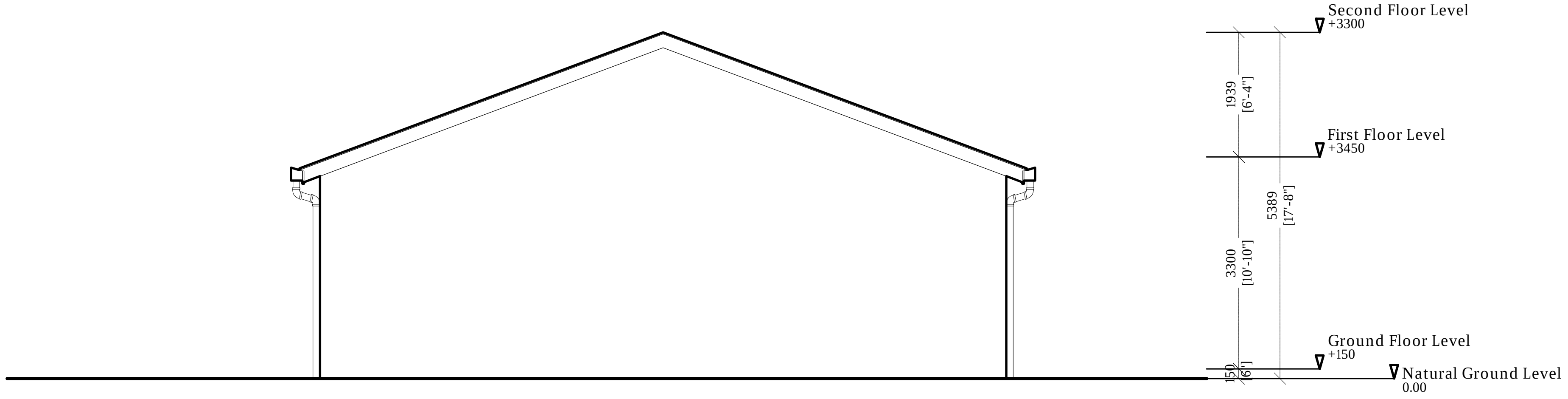
Second Floor Level
+3300
1939
[6'-4"]
First Floor Level
+3450
5389
[17'-8"]
3300
[10'-10"]
Ground Floor Level
+150
150
[6"]
Natural Ground Level
0.00

ELEVATION E2

1:100

ELEVATIONS

1:100

Legend

Note:

R01	NOV 2020		A.S.A.	F.I.A.	M.H.
REV. NO.	Date	Revision Description	Drawn	Chkd	Appd.

Title:

Consultancy Services for
Survey, Design and EIA works of
Water Supply and Sewerage
Facilities
in 6 Islands, Maldives – Package 5

Sub Title:

Water Supply System in V. Keyodhoo

Client:

Ministry of National Planning, Housing and
Infrastructure, Republic of Maldives

EPOCH ASSOCIATES
T: +960 333 3528
E: info@epoch.associates
W: wwww.epoch.associates
A: G. Rosary West,
Husnuheenaa Magu, Male', Maldives

FEEDBACK INFRA
Making Infrastructure Happen

Drawn: A.S.A.
Checked: F.I.A.
Designed: A.S.A.
Approved: M.H.
Date: Nov 2020
SCALE (A3): 1:100
Project No: EP-WS/2019/05
Rev: R-01
Page: A.3 (1)

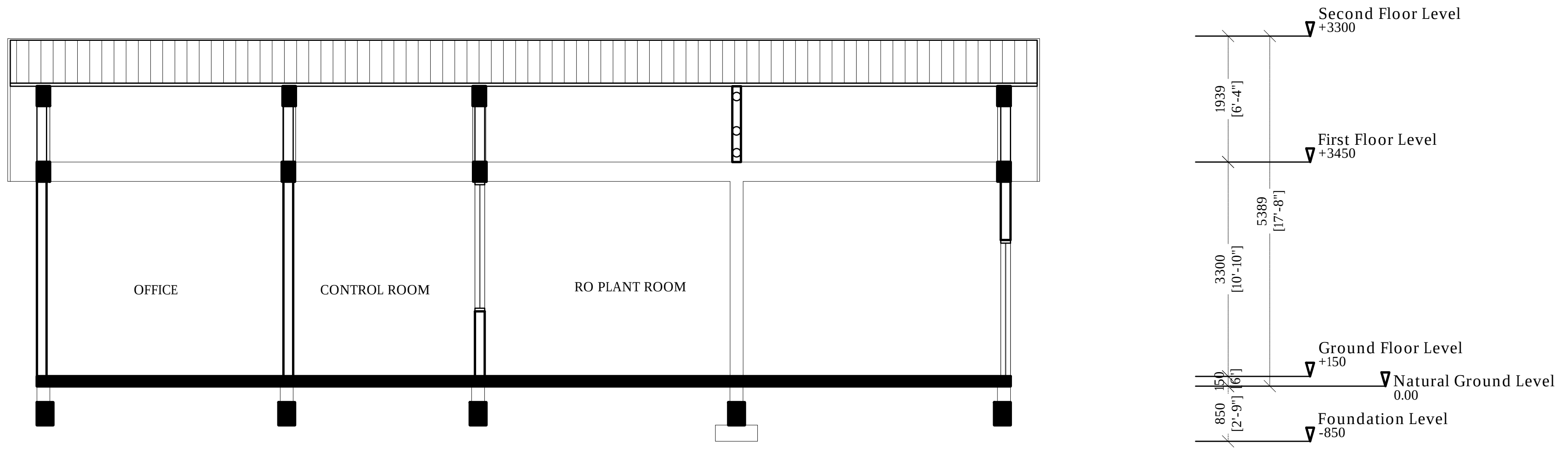
OFFICE
CONTROL ROOM
RO PLANT ROOM
Second Floor Level
+3300
First Floor Level
+3450
Ground Floor Level
+150
Natural Ground Level
0.00
Foundation Level
-850
1939
[6'-4"]
3300
[10'-10"]
5389
[17'-8"]
150
[6"]
850
[2'-9"]

SECTION XX

1:100

Legend

Note:

R01	NOV 2020		A.S.A.	F.I.A.	M.H.
REV. NO.	Date	Revision Description	Drawn	Chkd	Appd.

Title:

Consultancy Services for Survey, Design and EIA works of Water Supply and Sewerage Facilities
in 6 Islands, Maldives – Package 5

Sub Title:
Water Supply System in V. Keyodhoo

Client:
Ministry of National Planning, Housing and Infrastructure, Republic of Maldives

EPOCH ASSOCIATES
T: +960 333 3528
E: info@epoch.associates
W: wwww.epoch.associates
A: G. Rosary West,
Husnuheenaa Magu, Male', Maldives

FEEDBACK INFRA
Making Infrastructure Happen

Drawn: A.S.A.
Checked: F.I.A.
Designed: A.S.A.
Approved: M.H.
Date: Nov 2020
SCALE (A3): 1:100
Project No: EP-WS/2019/05
Rev: R-01
Page: A.4(1)

SECTION

1:100

Door ID	D1	D2	D3	GD1
Plan view	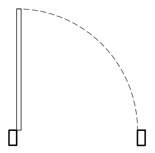	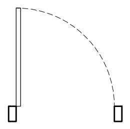	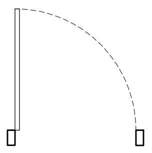	
Elevation view	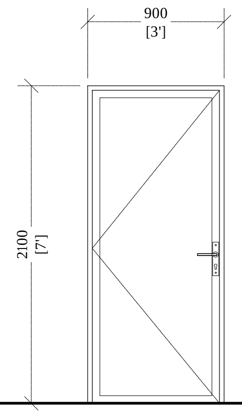	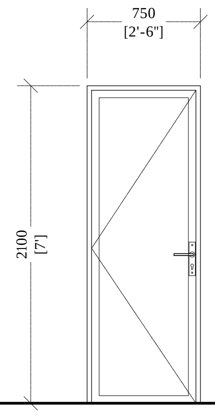	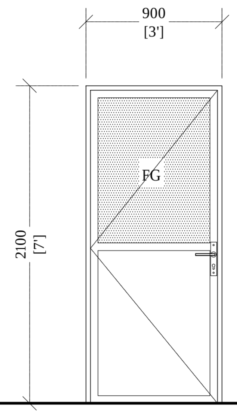	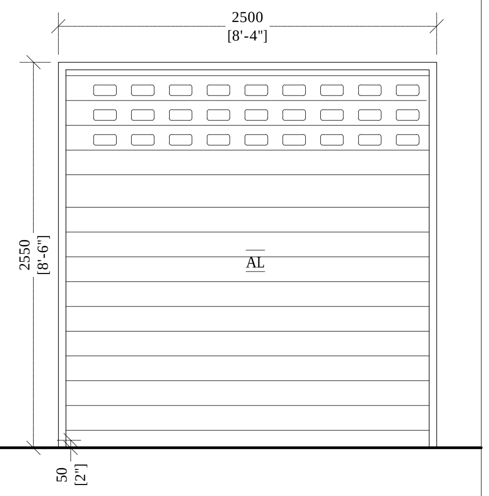
FFL				
Frame material	Aluminum black powder coated	Aluminum black powder coated	Aluminum black powder coated	Aluminum framed roller shutter
Panel material	Aluminum cladding sheet	Aluminum cladding sheet	Aluminum cladding sheet & Fixed clear glass	Aluminium
Openable area	1.74	1.45	1.74	6.0

General Notes:

Dimensions shown on DWG indicate effective openings of frame

All frame depths are 100mm
All dor panel thicknesses are 35mm
All window manel thickness are 25mm
Al frame edges shal be trimmed 3mm

All wodden components should be wood stained finish

All glazing should be of 6mm unless specified

External units must comply the following weather conditions:-
Wind pressure: 200 kg/sqm
Water tightness: 25 kg/sqm

All external frames / wall joints must be sealed with silicon sealant and the wedges trimmed with 12X12mm hardwood beading fixed to frames by brass nails

All hardware should be provided for the performance of al functions of the units

Hinges shall confirm to
1. Door size more than 700X1900mm
    WD: 125mm X2 sets
    SD: 150mm X3 sets
2. Door size less than 700X1900mm
    WD: 100mm X2 sets
    SD: 125mm X2 sets

Locks shall be cylinderical with master key sets

Door knobs shall be1000mm above FFL

DOOR & WINDOW SCHEDULE -1

1:50

Legend

Note:

REV. NO.	Date	Revision Description	Drawn	Chkd	Appd.
R01	NOV 2020		A.S.A.	F.I.A.	M.H.

Title:
Consultancy Services for Survey, Design and EIA works of Water Supply and Sewerage Facilities
in 6 Islands, Maldives – Package 5
Sub Title:
Water Supply System in V. Keyodhoo

Client:
Ministry of National Planning, Housing and Infrastructure, Republic of Maldives

EPOCH ASSOCIATES
T: +960 333 3528
E: info@epoch.associates
W: wwww.epoch.associates
A: G. Rosary West,
Husnuheenaa Magu, Male', Maldives

FEEDBACK INFRA
Making Infrastructure Happen

Drawn: A.S.A.
Checked: F.I.A.
Designed: A.S.A.
Approved: M.H.
Date: Nov 2020
SCALE (A3): 1:50
Project No: EP-WS/2019/05
Rev: R-01
Page: A.5 (1)

Door ID	DW 1	DW 2	W3
Plan view	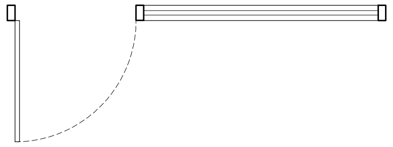	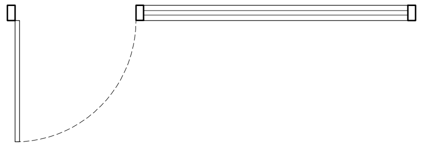	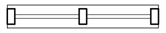
Elevation view	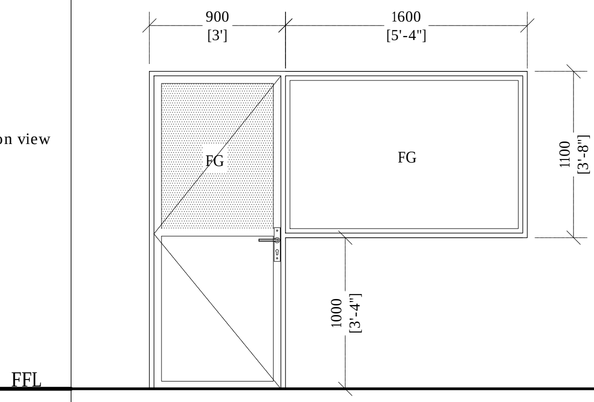 900 [3'] 1600 [5'-4"] FG FG 1100 [3'-8"] 1000 [3'-4"] FFL	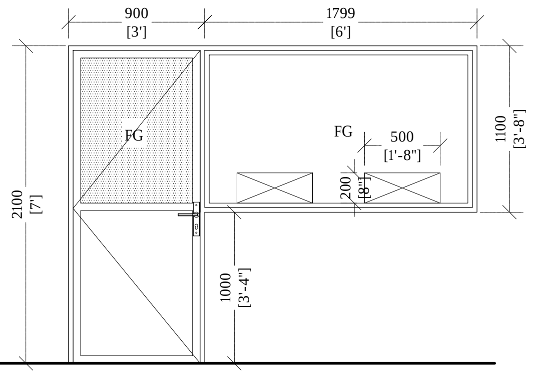 900 [3'] 1799 [6'] FG FG 500 [1'-8"] 200 [8"] 1100 [3'-8"] 2100 [7'] 1000 [3'-4"]	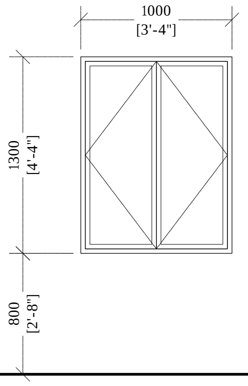
Frame material	Aluminum black powder coated	Aluminum black powder coated	Aluminum black powder coated
Panel material	Aluminum cladding sheet & Fixed clear glass	Aluminum cladding sheet & Fixed clear glass	Reflective Glass
Openable area	-	-	-

Door ID	V1
Plan view	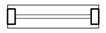
Elevation view	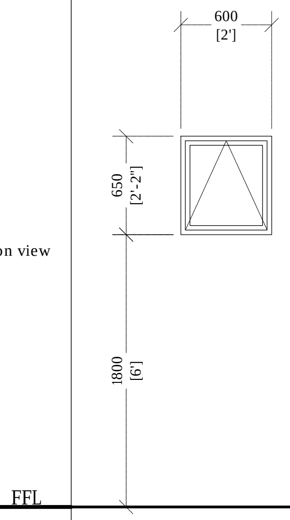
Frame material	Aluminum black powder coated
Panel material	Reflective Glass
Openable area	0.32

General Notes:

Dimensions shown on DWG indicate effective openings of frame

All frame depths are 100mm
All dor panel thicknesses are 35mm
All window manel thickness are 25mm
Al frame edges shal be trimmed 3mm

All wodden components should be wood stained finish

All glazing should be of 6mm unless specified

External units must comply the following weather conditions:-
Wind pressure: 200 kg/sqm
Water tightness: 25 kg/sqm

All external frames / wall joints must be sealed with silicon sealant and the wedges trimmed with 12X12mm hardwood beading fixed to frames by brass nails

All hardware should be provided for the performance of al functions of the units

Hinges shall confirm to
1. Door size more than 700X1900mm
    WD: 125mm X2 sets
    SD: 150mm X3 sets
2. Door size less than 700X1900mm
    WD: 100mm X2 sets
    SD: 125mm X2 sets

Locks shall be cylinderical with master key sets

Door knobs shall be1000mm above FFL

DOOR & WINDOW SCHEDULE -2

1:50

Legend

Note:

R01	NOV 2020		A.S.A.	F.I.A.	M.H.
REV. NO.	Date	Revision Description	Drawn	Chkd	Appd.

Title:
Consultancy Services for
Survey, Design and EIA works of
Water Supply and Sewerage
Facilities
in 6 Islands, Maldives – Package 5
Sub Title:
Water Supply System in V. Keyodhoo

Client:
Ministry of National Planning, Housing and
Infrastructure, Republic of Maldives

T: +960 333 3528
E: info@epoch.associates
W: wwww.epoch.associates
A: G. Rosary West,
Husnuheenaa Magu, Male', Maldives

Drawn: A.S.A.
Checked: F.I.A.
Designed: A.S.A.
Approved: M.H.
Date: Nov 2020
SCALE (A3): 1:50
Project No: EP-WS/2019/05
Rev: R-01
Page: A.5 (2)

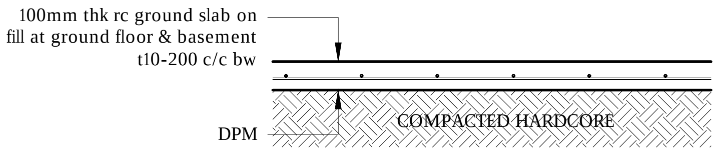
100mm thk rc ground slab on
fill at ground floor & basement
t10-200 c/c bw
COMPACTED HARDCORE
DPM

Note:

- All cover blocks shall be casted using grade C25/30 concrete with 5-10mm aggregates
- For slab, rebar spacer chairs spacing shall be minimum 1m spacing or 1 no. per 1 sqm

TYPICAL GROUND SLAB DETAIL

1:20

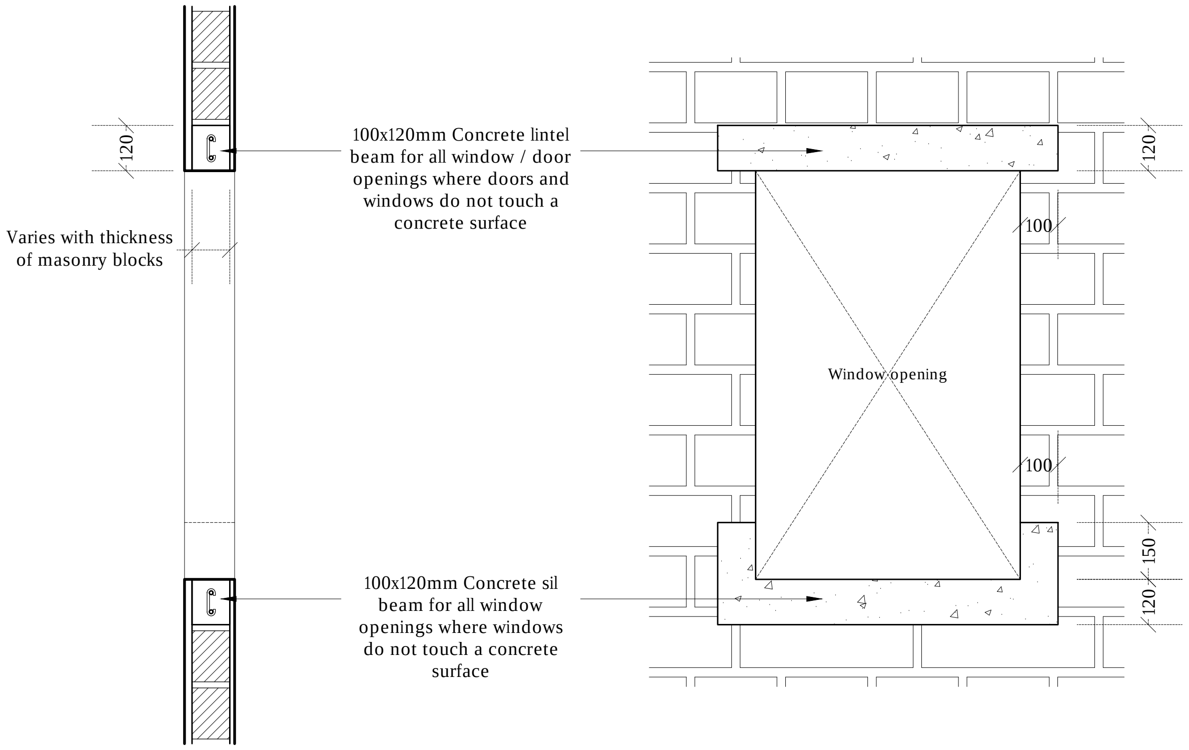
120
Varies with thickness
of masonry blocks
100x120mm Concrete lintel
beam for all window / door
openings where doors and
windows do not touch a
concrete surface
120
100
Window opening
100
150
120
100x120mm Concrete sil
beam for all window
openings where windows
do not touch a concrete
surface

TYPICAL OPENING DETAIL

1:20

Legend

Note:

R01	NOV 2020		A.S.A.	F.I.A.	M.H.
REV. NO.	Date	Revision Description	Drawn	Chkd	Appd.

Title:
Consultancy Services for
Survey, Design and EIA works of
Water Supply and Sewerage
Facilities
in 6 Islands, Maldives – Package 5
Sub Title:
Water Supply System in V. Keyodhoo

Client:
Ministry of National Planning, Housing and
Infrastructure, Republic of Maldives

T: +960 333 3528
E: info@epoch.associates
W: wwww.epoch.associates
A: G. Rosary West,
Husnuheenaa Magu, Male', Maldives

Drawn: A.S.A. Checked: F.I.A.
Designed: A.S.A. Approved: M.H.
Date: Nov 2020 SCALE (A3): 1:20
Project No: EP-WS/2019/05
Rev: R-01 Page: A.D (1)

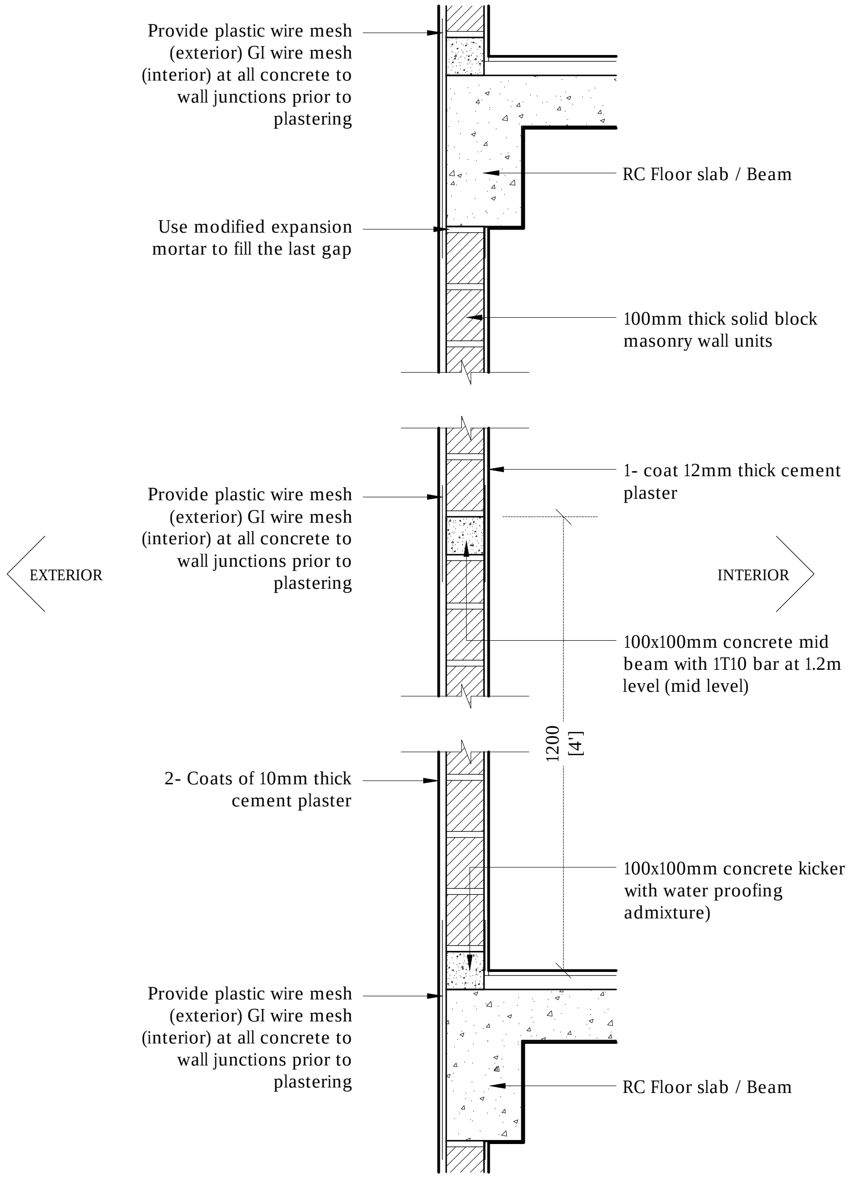
Provide plastic wire mesh (exterior) GI wire mesh (interior) at all concrete to wall junctions prior to plastering
RC Floor slab / Beam
Use modified expansion mortar to fill the last gap
100mm thick solid block masonry wall units
1- coat 12mm thick cement plaster
Provide plastic wire mesh (exterior) GI wire mesh (interior) at all concrete to wall junctions prior to plastering
EXTERIOR
INTERIOR
100x100mm concrete mid beam with 1T10 bar at 1.2m level (mid level)
1200
[4']
2- Coats of 10mm thick cement plaster
100x100mm concrete kicker with water proofing admixture)
Provide plastic wire mesh (exterior) GI wire mesh (interior) at all concrete to wall junctions prior to plastering
RC Floor slab / Beam

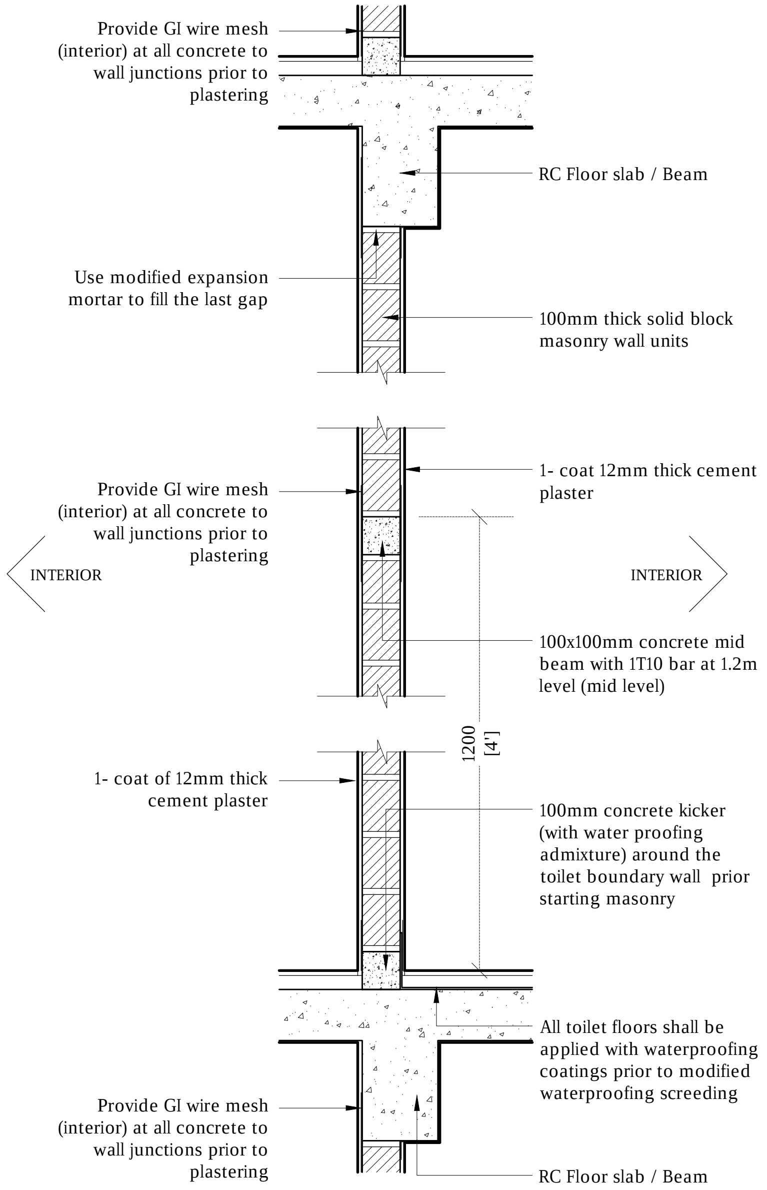
Provide GI wire mesh (interior) at all concrete to wall junctions prior to plastering
RC Floor slab / Beam
Use modified expansion mortar to fill the last gap
100mm thick solid block masonry wall units
1- coat 12mm thick cement plaster
Provide GI wire mesh (interior) at all concrete to wall junctions prior to plastering
INTERIOR
INTERIOR
100x100mm concrete mid beam with 1T10 bar at 1.2m level (mid level)
1200
[4']
1- coat of 12mm thick cement plaster
100mm concrete kicker (with water proofing admixture) around the toilet boundary wall prior starting masonry
All toilet floors shall be applied with waterproofing coatings prior to modified waterproofing screeding
Provide GI wire mesh (interior) at all concrete to wall junctions prior to plastering
RC Floor slab / Beam

Note:

- Concrete surfaces shall be thoroughly cleaned with water & applied with mastercast 141 or equivalent bonding mortar prior to plastering.
- Plastering mortar mix shall be 1:4 (cement: sand) ratio.
- Plaster mix shall be modified using fibre wool & mastercast 141 or equivalent plasticisers as per manufacturer's specification.
- Height of placing blocks shall be maximum 1.2m per day.
- After initial coat of plastering, water curing shall be provided for minimum 3 days & after final coat water curing shall be provided for 7 days.

TYPICAL WALL CONSTRUCTION DETAIL

1:20

Legend

Note:

R01	NOV 2020		A.S.A.	F.I.A.	M.H.
REV. NO.	Date	Revision Description	Drawn	Chkd	Appd.

Title:
Consultancy Services for
Survey, Design and EIA works of
Water Supply and Sewerage
Facilities
in 6 Islands, Maldives – Package 5

Sub Title:
Water Supply System in V. Keyodhoo

Client:
Ministry of National Planning, Housing and Infrastructure, Republic of Maldives

T: +960 333 3528
E: info@epoch.associates
W: wwww.epoch.associates
A: G. Rosary West,
Husnuheenaa Magu, Male', Maldives

Drawn: A.S.A.	Checked: F.I.A.
Designed: A.S.A.	Approved: M.H.
Date: Nov 2020	SCALE (A3): 1:20
Project No: EP-WS/2019/05	
Rev: R-01	Page: A.D (2)

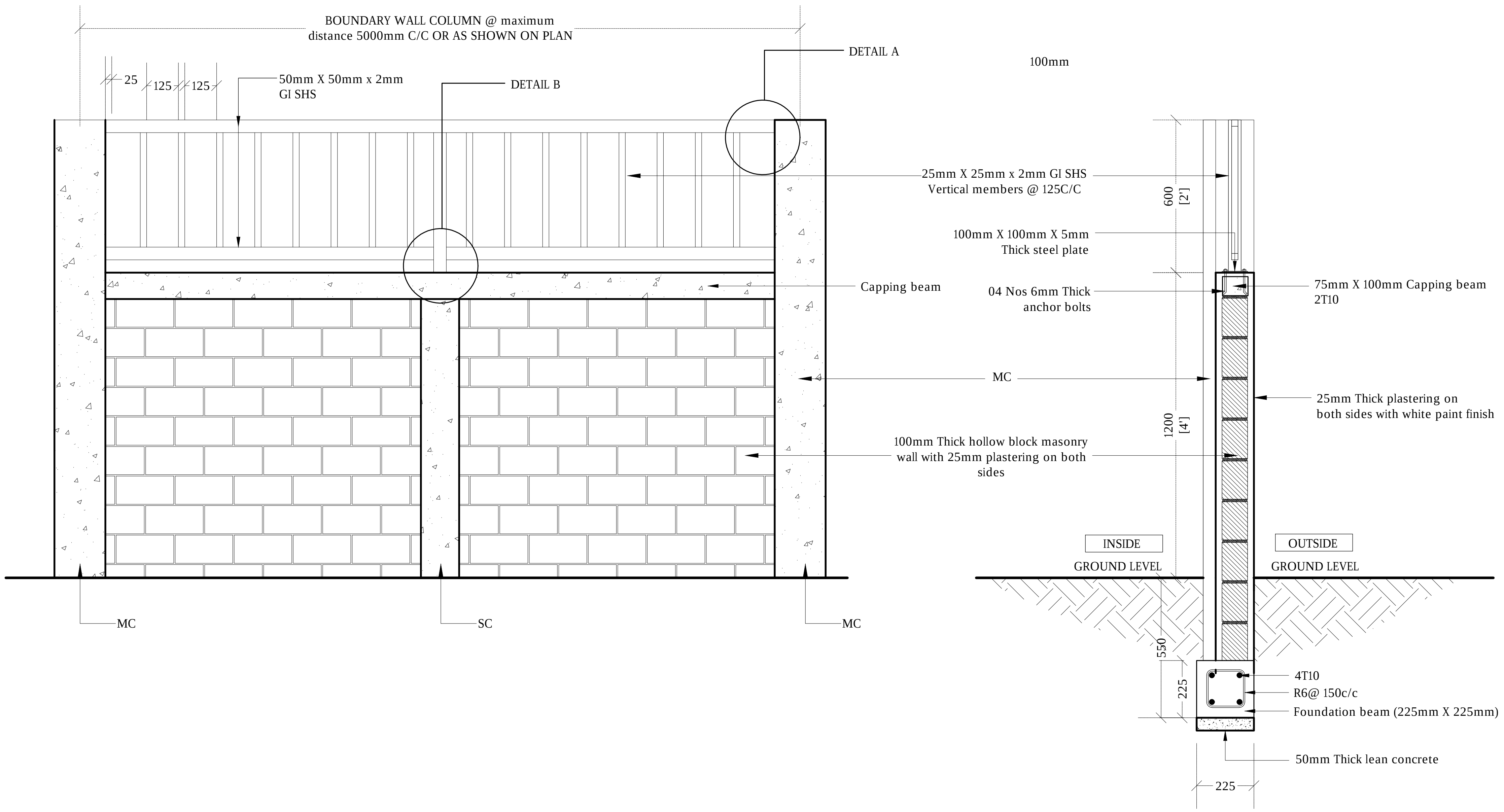
BOUNDARY WALL COLUMN @ maximum distance 5000mm C/C OR AS SHOWN ON PLAN
DETAIL A
DETAIL B
25
125
125
50mm X 50mm x 2mm GI SHS
100mm
25mm X 25mm x 2mm GI SHS Vertical members @ 125C/C
100mm X 100mm X 5mm Thick steel plate
Capping beam
04 Nos 6mm Thick anchor bolts
75mm X 100mm Capping beam 2T10
MC
25mm Thick plastering on both sides with white paint finish
100mm Thick hollow block masonry wall with 25mm plastering on both sides
600 [2']
1200 [4']
INSIDE
GROUND LEVEL
OUTSIDE
GROUND LEVEL
MC
SC
MC
550
225
4T10
R6@ 150c/c
Foundation beam (225mm X 225mm)
50mm Thick lean concrete
225

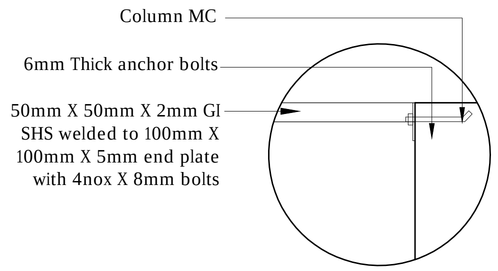
Column MC
6mm Thick anchor bolts
50mm X 50mm X 2mm GI SHS welded to 100mm X 100mm X 5mm end plate with 4nox X 8mm bolts

DETAIL A

1:10

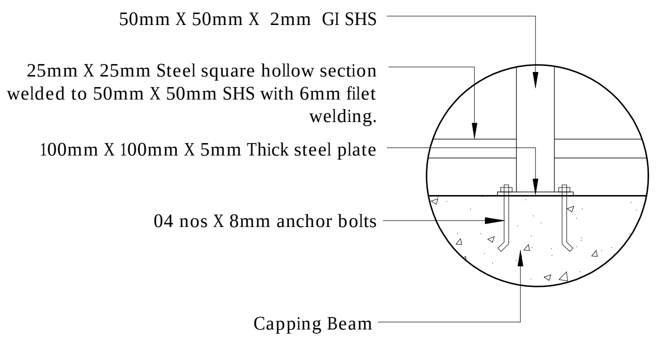
50mm X 50mm X 2mm GI SHS
25mm X 25mm Steel square hollow section welded to 50mm X 50mm SHS with 6mm filet welding.
100mm X 100mm X 5mm Thick steel plate
04 nos X 8mm anchor bolts
Capping Beam

DETAIL B

1:10

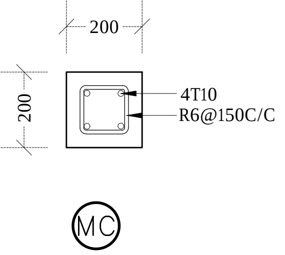
200
200
4T10
R6@150C/C
MC

MAIN COLUMN
@ maximum distance 5000mm C/C

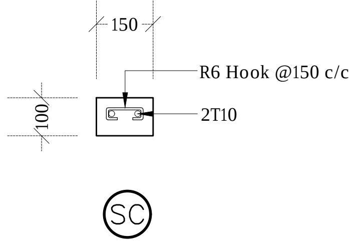
150
R6 Hook @150 c/c
100
2T10
SC

STIFFENER COLUMN
(in between two main columns)

NOTE:
- FRAME MATERIAL : Steel gate frame 2.5mm thick GI sections SHS
- All steel members and GI SHS to be applied with 2 coats of anti-corrosive paint with epoxy finishing paint
- Allowance shall be made to fix pad lock in Gates

BOUNDARY WALL DETAIL

1:20

Legend

Note:
- FRAME MATERIAL : Steel gate frame 2.5mm thick GI sections SHS
- All steel members and GI SHS to be applied with 2 coats of anti-corrosive paint with epoxy finishing paint
- Allowance shall be made to fix pad lock in Gates
- Cover for foundation beams shall be 50mm
- Cover for columns (MC) shall be 40mm
- Concrete shall be of grade C25
- All concrete cold joints shall casted with bonding agent

R01	NOV 2020		A.S.A.	F.I.A.	M.H.
REV. NO.	Date	Revision Description	Drawn	Chkd	Appd.

Title:
Consultancy Services for
Survey, Design and EIA works of
Water Supply and Sewerage
Facilities
in 6 Islands, Maldives – Package 5
Sub Title:
Water Supply System in V. Keyodhoo

Client:
Ministry of National Planning, Housing and
Infrastructure, Republic of Maldives

T: +960 333 3528
E: info@epoch.associates
W: wwww.epoch.associates
A: G. Rosary West,
Husnuheenaa Magu, Male', Maldives

Drawn: A.S.A.
Checked: F.I.A.
Designed: A.S.A.
Approved: M.H.
Date: Nov 2020
SCALE (A3): 1:20
Project No: EP-WS/2019/05
Rev: R-01
Page: A.D (3)

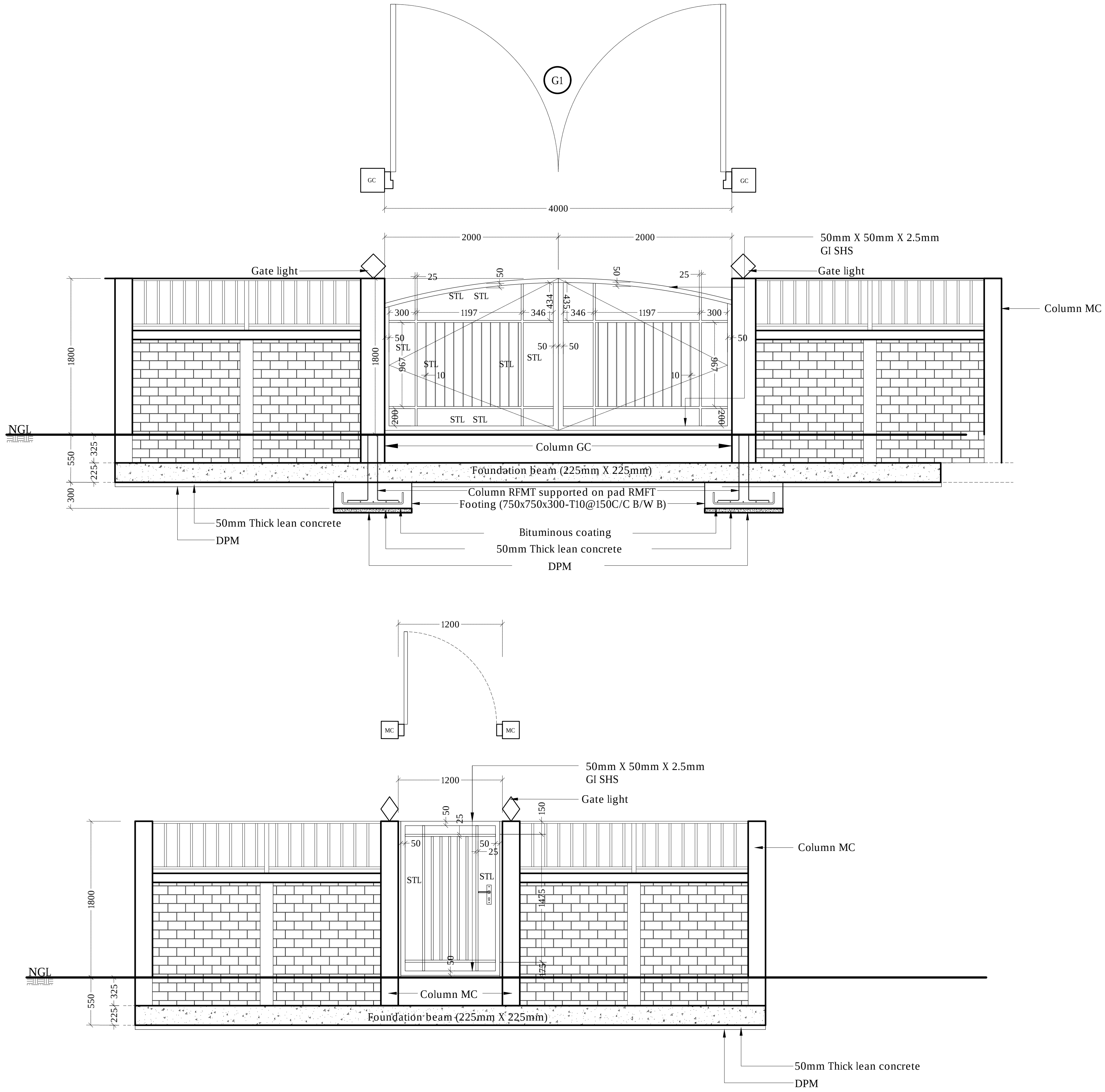
G1
GC
GC
4000
2000
2000
50mm X 50mm X 2.5mm
GI SHS
Gate light
Gate light
Column MC
25
50
50
25
STL
300
1197
346
434
435
346
1197
300
50
STL
967
STL
10
STL
50
50
STL
10
967
50
1800
1800
200
STL
STL
200
NGL
550
325
225
300
Column GC
Foundation beam (225mm X 225mm)
Column RFMT supported on pad RMFT
Footing (750x750x300-T10@150C/C B/W B)
50mm Thick lean concrete
DPM
Bituminous coating
50mm Thick lean concrete
DPM
1200
MC
MC
1200
50mm X 50mm X 2.5mm
GI SHS
Gate light
Column MC
50
25
50
50
25
150
STL
STL
1475
50
175
1800
NGL
550
325
225
Column MC
Foundation beam (225mm X 225mm)
50mm Thick lean concrete
DPM

GATE DETAILS

1:50

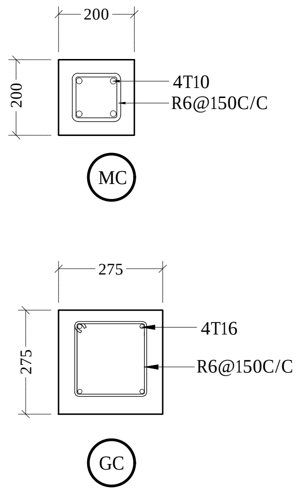
200
200
4T10
R6@150C/C
MC
275
275
4T16
R6@150C/C
GC

COLUMN DETAILS

1:20

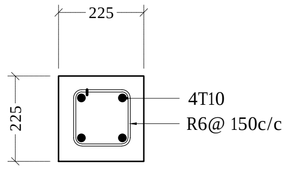
225
225
4T10
R6@ 150c/c

FOUNDATION BEAM DETAIL

1:20

Legend

Note:

- FRAME MATERIAL : Steel gate frame 2.5mm thick GI sections RHS
- PANEL MATERIAL : Steel frame with steel panels (STL) as shown on elevation view
- All steel members and GI SHS to be applied with 2 coats of anti-corrosive paint with epoxy finishing paint
- Allowance shall be made to fix pad lock in Gates
- Cover for foundation pads and foundation beams shall be 50mm
- Cover for columns (GC) and(MC) shall be 40mm
- Concrete shall be of grade C25
- All concrete cold joints shall casted with bonding agent

R01	NOV 2020		A.S.A.	F.I.A.	M.H.
REV. NO.	Date	Revision Description	Drawn	Chkd	Appd.

Title:

Consultancy Services for
Survey, Design and EIA works of
Water Supply and Sewerage
Facilities
in 6 Islands, Maldives – Package 5

Sub Title:

Water Supply System in V. Keyodhoo

Client:

Ministry of National Planning, Housing and Infrastructure, Republic of Maldives

EPOCH ASSOCIATES

T: +960 333 3528
E: info@epoch.associates
W: wwww.epoch.associates
A: G. Rosary West,
Husnuheenaa Magu, Male', Maldives

FEEDBACK INFRA

Drawn: A.S.A.
Checked: F.I.A.
Designed: A.S.A.
Approved: M.H.
Date: Nov 2020
SCALE (A3): 1:20
Project No: EP-WS/2019/05
Rev: R-01
Page: A.D (4)

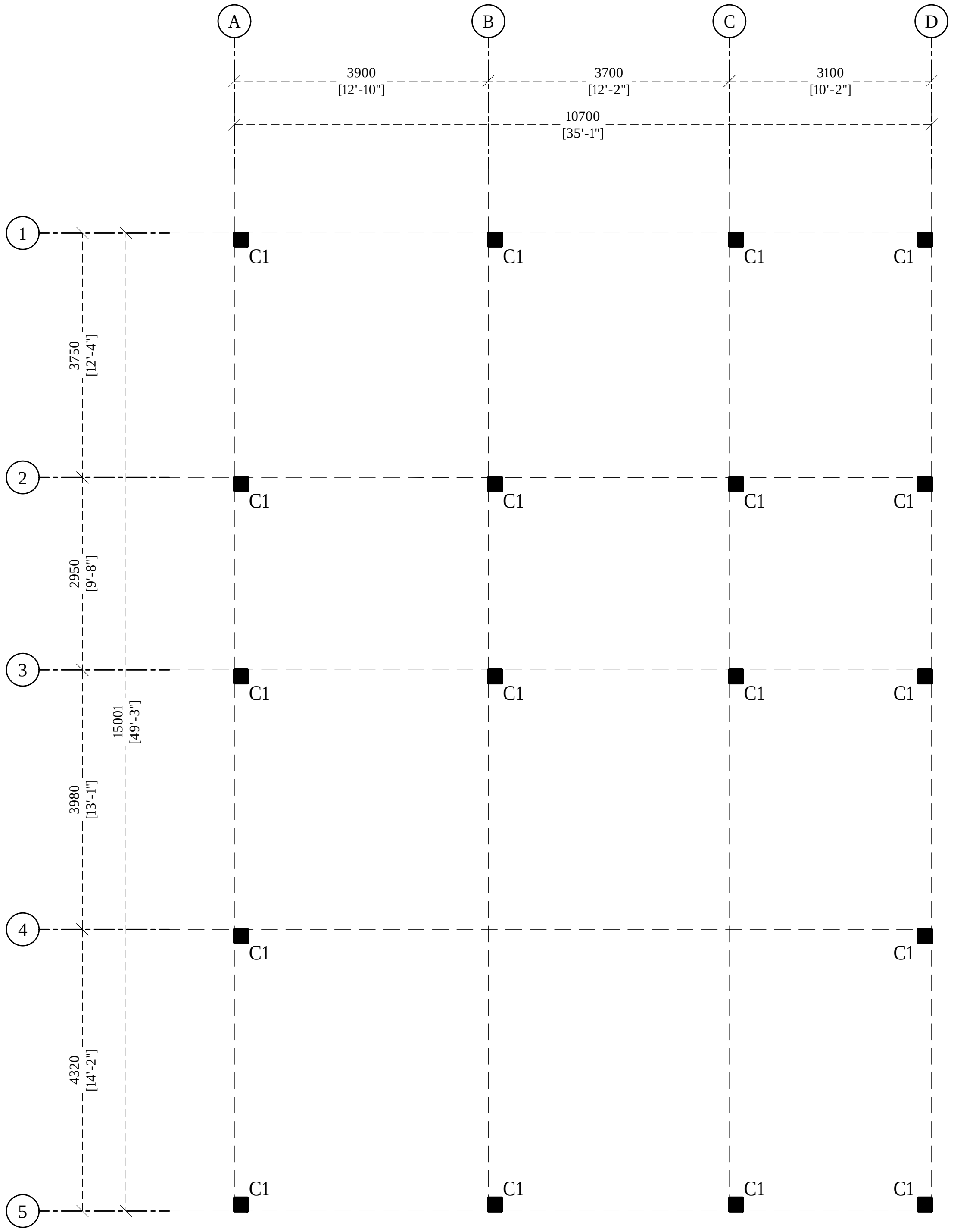
A
B
C
D
3900
[12'-10"]
3700
[12'-2"]
3100
[10'-2"]
10700
[35'-1"]
1
2
3
4
5
3750
[12'-4"]
2950
[9'-8"]
3980
[13'-1"]
4320
[14'-2"]
15001
[49'-3"]
C1

COLUMN LAYOUT PLAN

1:100

Legend

Note:

R01	NOV 2020		A.S.A.	F.I.A.	M.H.
REV. NO.	Date	Revision Description	Drawn	Chkd	Appd.

Title:
Consultancy Services for
Survey, Design and EIA works of
Water Supply and Sewerage
Facilities
in 6 Islands, Maldives – Package 5
Sub Title:
Water Supply System in V. Keyodhoo

Client:
Ministry of National Planning, Housing and
Infrastructure, Republic of Maldives

T: +960 333 3528
E: info@epoch.associates
W: wwww.epoch.associates
A: G. Rosary West,
Husnuheenaa Magu, Male', Maldives

Drawn: A.S.A.
Checked: F.I.A.
Designed: A.S.A.
Approved: M.H.
Date: Nov 2020
SCALE (A3): 1:100
Project No: EP-WS/2019/05
Rev: R-01
Page: S.1 (1)

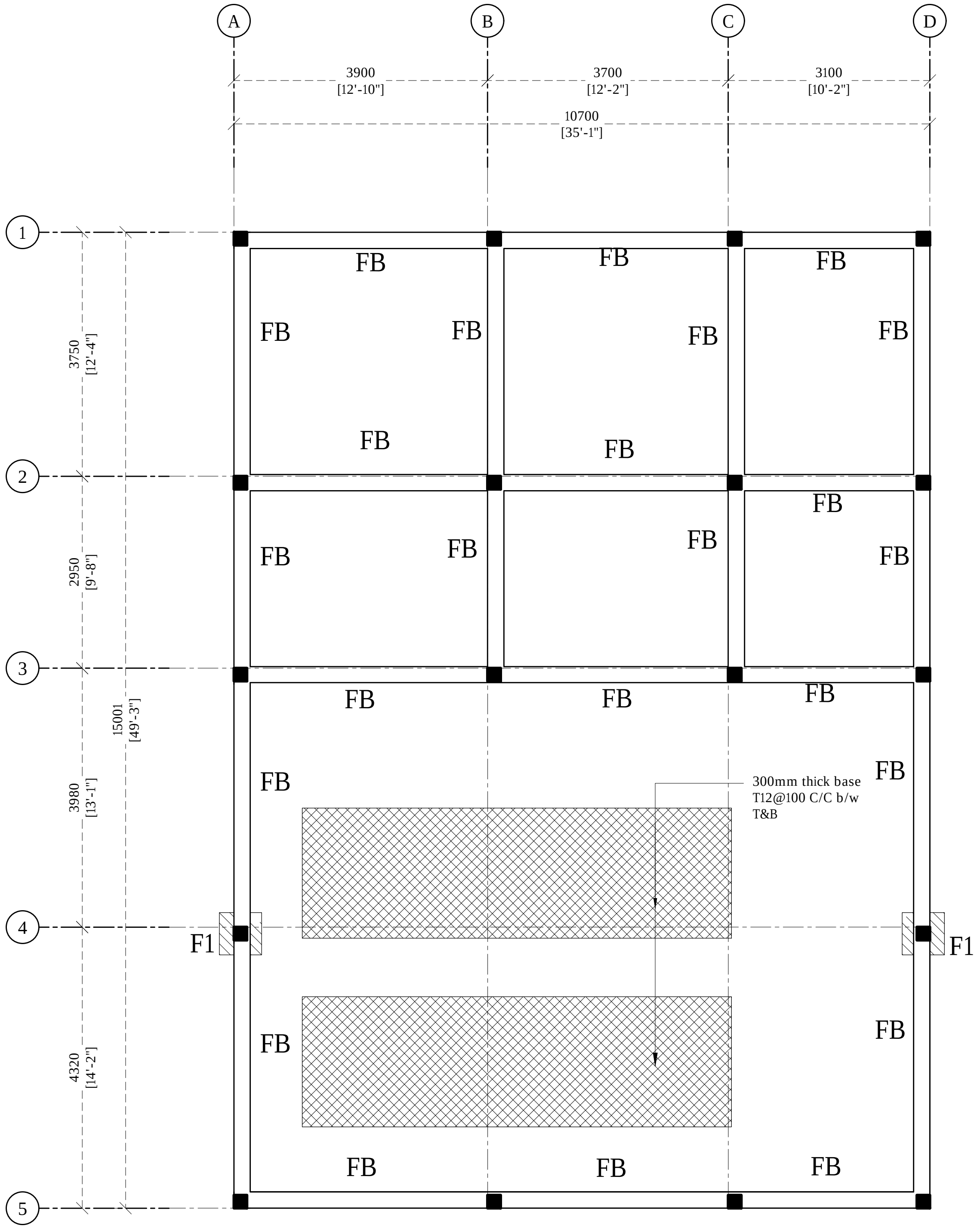
A
B
C
D
3900
[12'-10"]
3700
[12'-2"]
3100
[10'-2"]
10700
[35'-1"]
1
2
3
4
5
3750
[12'-4"]
2950
[9'-8"]
3980
[13'-1"]
4320
[14'-2"]
15001
[49'-3"]
FB
F1
300mm thick base
T12@100 C/C b/w
T&B

Legend

Note:

- Foundation Footing Depth : 850mm
- Foundation Beam Depth : 600mm

R01	NOV 2020		A.S.A.	F.I.A.	M.H.
REV. NO.	Date	Revision Description	Drawn	Chkd	Appd.

Title:
Consultancy Services for Survey, Design and EIA works of Water Supply and Sewerage Facilities
in 6 Islands, Maldives – Package 5
Sub Title:
Water Supply System in V. Keyodhoo

Client:
Ministry of National Planning, Housing and Infrastructure, Republic of Maldives

EPOCH ASSOCIATES
T: +960 333 3528
E: info@epoch.associates
W: wwww.epoch.associates
A: G. Rosary West,
Husnuheenaa Magu, Male', Maldives

FEEDBACK INFRA
Making Infrastructure Happen

Drawn: A.S.A.
Checked: F.I.A.
Designed: A.S.A.
Approved: M.H.
Date: Nov 2020
SCALE (A3): 1:100
Project No: EP-WS/2019/05
Rev: R-01
Page: S.2 (1)

FOUNDATION PLAN

1:100

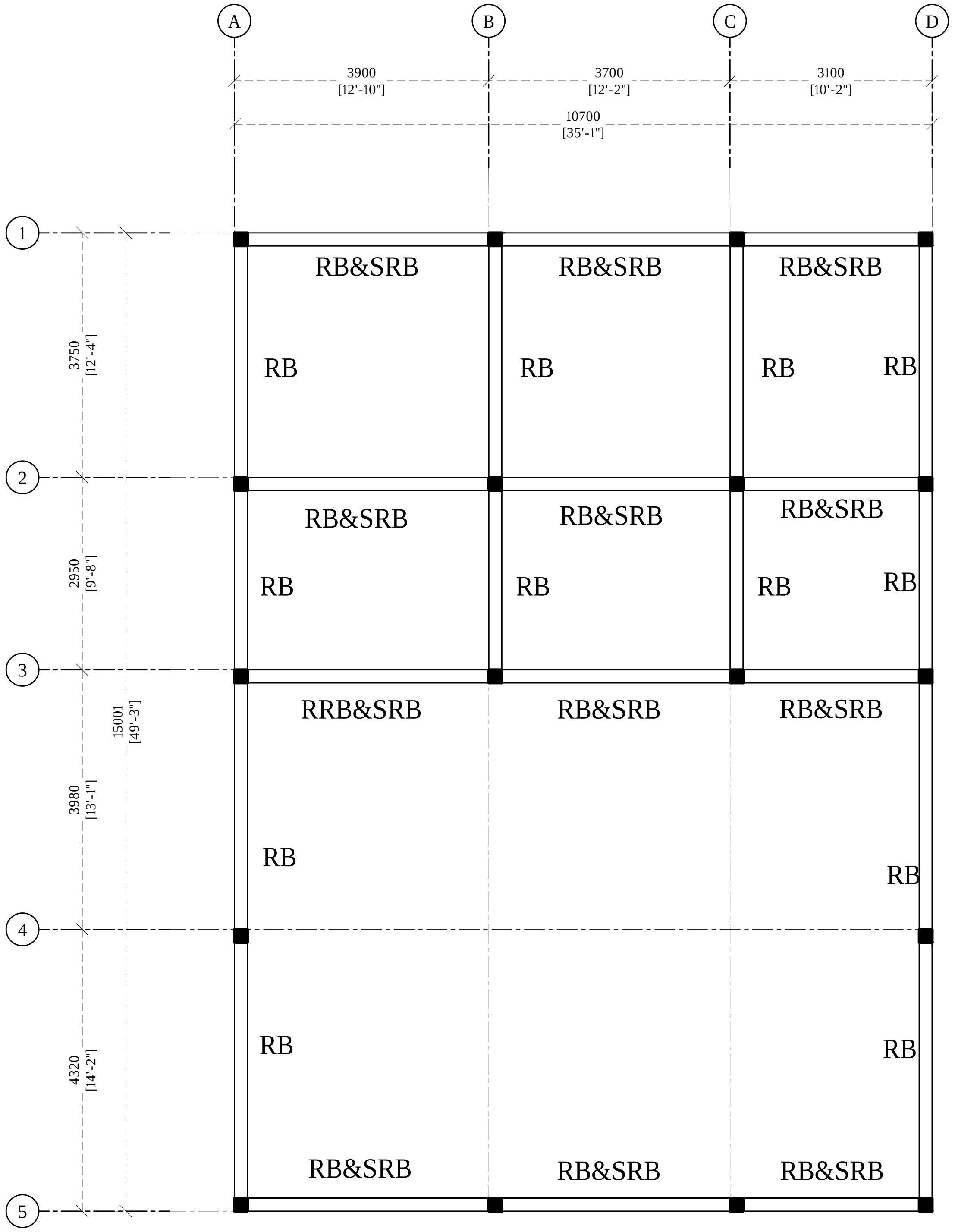
A
B
C
D
3900
[12'-10"]
3700
[12'-2"]
3100
[10'-2"]
10700
[35'-1"]
1
2
3
4
5
3750
[12'-4"]
2950
[9'-8"]
3980
[13'-1"]
4320
[14'-2"]
15001
[49'-3"]
RB&SRB
RB&SRB
RB&SRB
RB
RB
RB
RB
RB&SRB
RB&SRB
RB&SRB
RB
RB
RB
RB
RRB&SRB
RB&SRB
RB&SRB
RB
RB
RB
RB
RB&SRB
RB&SRB
RB&SRB

ROOF BEAM PLAN

1:100

Legend

Note:

R01	NOV 2020		A.S.A.	F.I.A.	M.H.
REV. NO.	Date	Revision Description	Drawn	Chkd	Appd.

Title:
Consultancy Services for Survey, Design and EIA works of Water Supply and Sewerage Facilities
in 6 Islands, Maldives – Package 5
Sub Title:
Water Supply System in V. Keyodhoo

Client:
Ministry of National Planning, Housing and Infrastructure, Republic of Maldives

T: +960 333 3528
E: info@epoch.associates
W: wwww.epoch.associates
A: G. Rosary West,
Husnuheenaa Magu, Male', Maldives

Drawn: A.S.A.
Checked: F.I.A.
Designed: A.S.A.
Approved: M.H.
Date: Nov 2020
SCALE (A3): 1:100
Project No: EP-WS/2019/05
Rev: R-01
Page: S.3 (1)

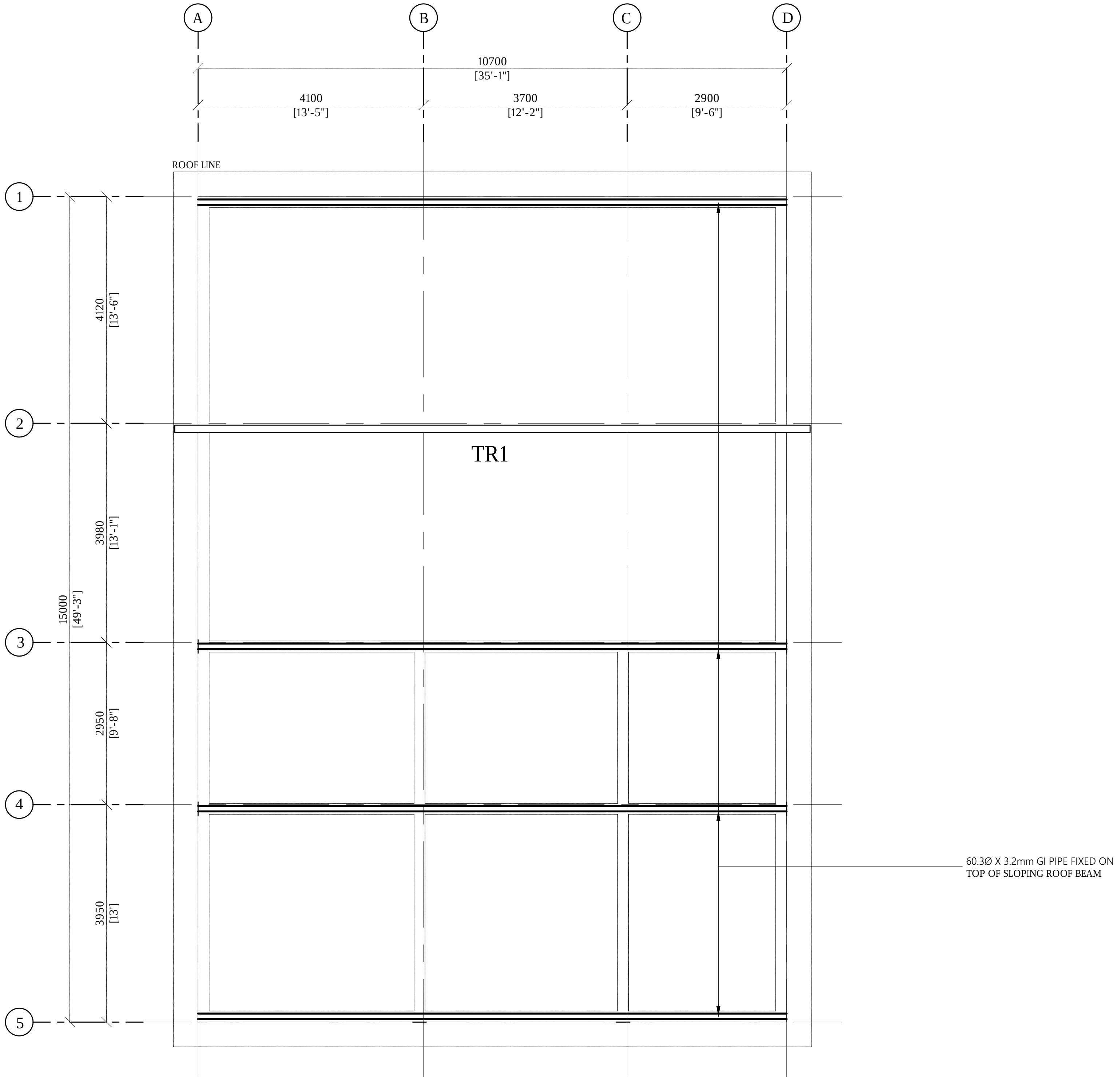
A
B
C
D
10700
[35'-1"]
4100
[13'-5"]
3700
[12'-2"]
2900
[9'-6"]
ROOF LINE
1
2
3
4
5
4120
[13'-6"]
3980
[13'-1"]
2950
[9'-8"]
3950
[13']
15000
[49'-3"]
TR1
60.3Ø X 3.2mm GI PIPE FIXED ON
TOP OF SLOPING ROOF BEAM

ROOF TRUSS PLAN

1:100

Legend

Note:

R01	NOV 2020		A.S.A.	F.I.A.	M.H.
REV. NO.	Date	Revision Description	Drawn	Chkd	Appd.

Title:

Consultancy Services for
Survey, Design and EIA works of
Water Supply and Sewerage
Facilities
in 6 Islands, Maldives – Package 5

Sub Title:

Water Supply System in V. Keyodhoo

Client:

Ministry of National Planning, Housing and
Infrastructure, Republic of Maldives

EPOCH ASSOCIATES

T: +960 333 3528
E: info@epoch.associates
W: wwww.epoch.associates
A: G. Rosary West,
Husnuheenaa Magu, Male', Maldives

FEEDBACK INFRA
Making Infrastructure Happen

Drawn: A.S.A.
Checked: F.I.A.
Designed: A.S.A.
Approved: M.H.
Date: Nov 2020
SCALE (A3): 1:100
Project No: EP-WS/2019/05
Rev: R-01
Page: S.3 (2)

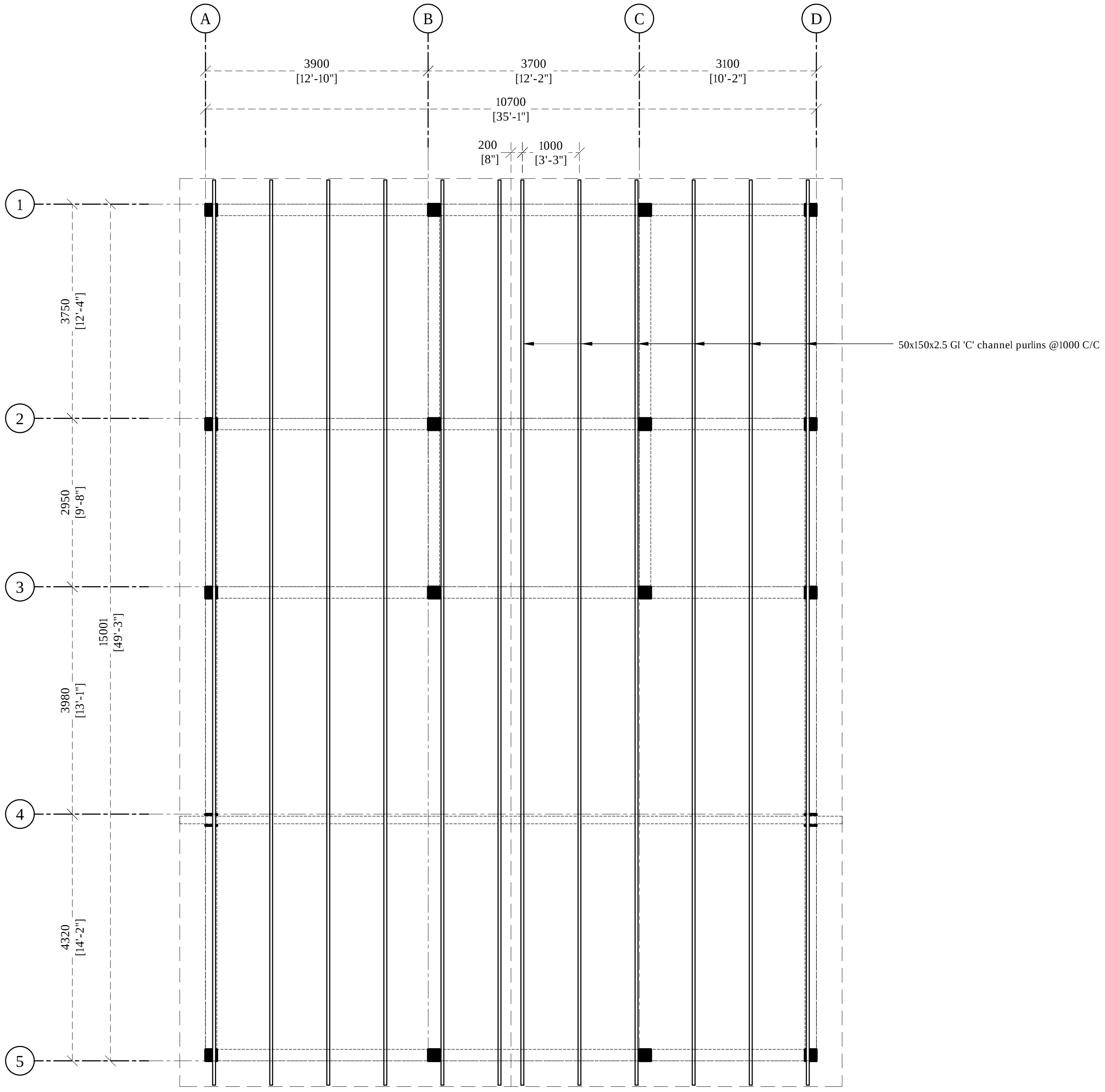
A
B
C
D
3900
[12'-10"]
3700
[12'-2"]
3100
[10'-2"]
10700
[35'-1"]
200
[8"]
1000
[3'-3"]
1
2
3
4
5
3750
[12'-4"]
2950
[9'-8"]
3980
[13'-1"]
4320
[14'-2"]
15001
[49'-3"]
50x150x2.5 GI 'C' channel purlins @1000 C/C

ROOF FRAMING PLAN

1:100

Legend

Note:

R01	NOV 2020		A.S.A.	F.I.A.	M.H.
REV. NO.	Date	Revision Description	Drawn	Chkd	Appd.

Title:
Consultancy Services for
Survey, Design and EIA works of
Water Supply and Sewerage
Facilities
in 6 Islands, Maldives – Package 5
Sub Title:
Water Supply System in V. Keyodhoo

Client:
Ministry of National Planning, Housing and
Infrastructure, Republic of Maldives

EPOCH ASSOCIATES
T: +960 333 3528
E: info@epoch.associates
W: wwww.epoch.associates
A: G. Rosary West,
Husnuheenaa Magu, Male', Maldives

FEEDBACK INFRA
Making Infrastructure Happen

Drawn: A.S.A.
Checked: F.I.A.
Designed: A.S.A.
Approved: M.H.
Date: Nov 2020
SCALE (A3): 1:100
Project No: EP-WS/2019/05
Rev: R-01
Page: S.3 (3)

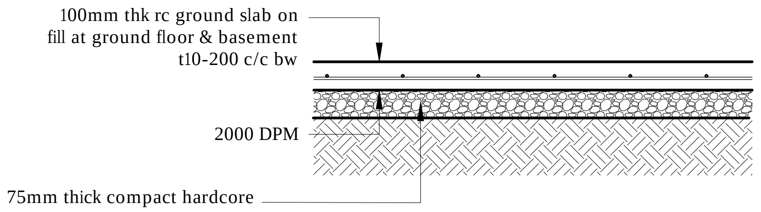
100mm thk rc ground slab on
fill at ground floor & basement
t10-200 c/c bw
2000 DPM
75mm thick compact hardcore

Note:

- All cover blocks shall be casted using grade C25/30 concrete with 5-10mm aggregates
- For slab, rebar spacer chairs spacing shall be minimum 1m spacing or 1 no. per 1 sqm

TYPICAL GROUND SLAB DETAIL

1:20

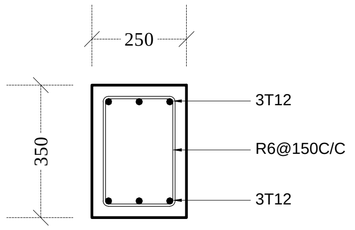
250
350
3T12
R6@150C/C
3T12

FOUNDATION BEAM (FB)

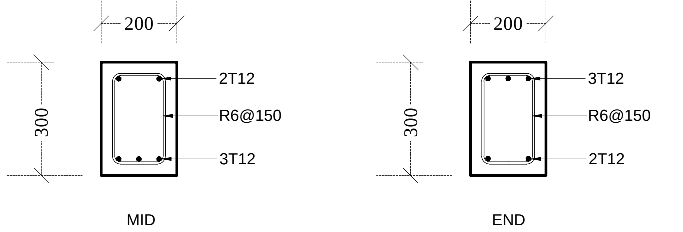
200
300
2T12
R6@150
3T12
200
300
3T12
R6@150
2T12

MID

END

ROOF BEAM (RB)

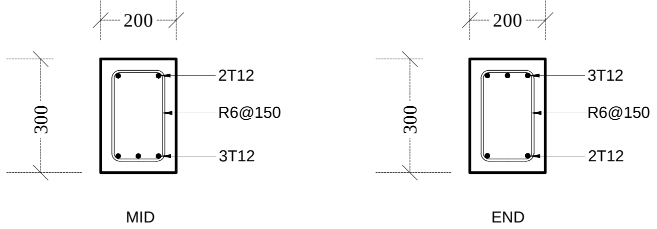
200
300
2T12
R6@150
3T12
200
300
3T12
R6@150
2T12

MID

END

SLOPING ROOF BEAM (SRB)

F1 - 650x650x250 - T10@150C/C B/W (B)

FOUNDATION PAD DETAILS

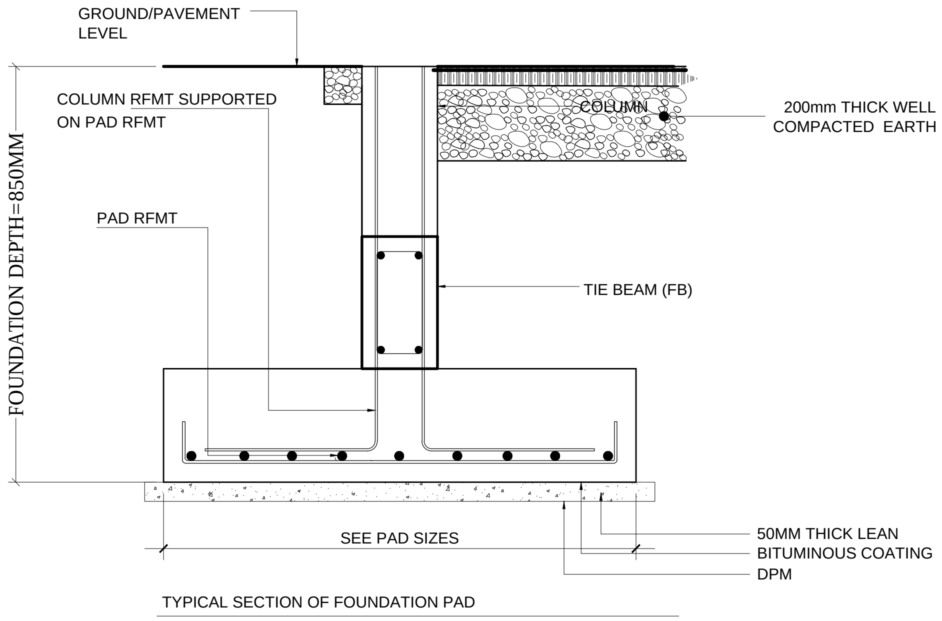
GROUND/PAVEMENT
LEVEL
COLUMN RFMT SUPPORTED
ON PAD RFMT
COLUMN
200mm THICK WELL
COMPACTED EARTH
FOUNDATION DEPTH=850MM
PAD RFMT
TIE BEAM (FB)
SEE PAD SIZES
50MM THICK LEAN
BITUMINOUS COATING
DPM
TYPICAL SECTION OF FOUNDATION PAD

TYPICAL COLUMN SECTION

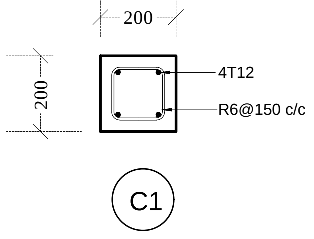
200
200
4T12
R6@150 c/c
C1

COLUMN DETAIL

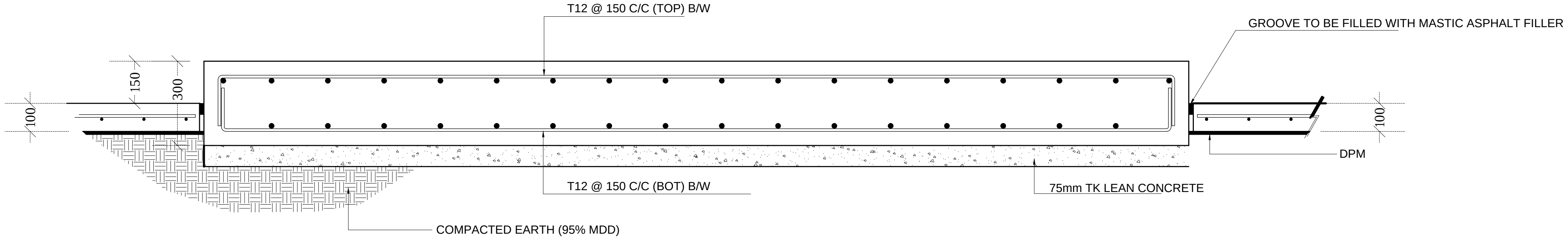
T12 @ 150 C/C (TOP) B/W
GROOVE TO BE FILLED WITH MASTIC ASPHALT FILLER
150
300
100
100
DPM
T12 @ 150 C/C (BOT) B/W
75mm TK LEAN CONCRETE
COMPACTED EARTH (95% MDD)

RO PLANT BASE DETAIL

STRUCTURAL DETAILS

1:20

Legend

Note:

- Cover for foundation pads and foundation beams shall be 50mm
- Cover for floor slabs shall be 30mm
- Cover for columns shall be 40mm
- Concrete shall be of grade C25
- All concrete cold joints shall be casted with bonding agent
- laps = 45 dia (dia = bar dimeter)
- mid bars = 0.85 x span
- sup bars = 1/3 x span
- concrete mix = 1:2:3 (C:S:A)
- lean concrete mix = 1:2:5

R01	NOV 2020		A.S.A.	F.I.A.	M.H.
REV. NO.	Date	Revision Description	Drawn	Chkd	Appd.

Title:
Consultancy Services for
Survey, Design and EIA works of
Water Supply and Sewerage
Facilities
in 6 Islands, Maldives – Package 5
Sub Title:
Water Supply System in V. Keyodhoo

Client:
Ministry of National Planning, Housing and
Infrastructure, Republic of Maldives

EPOCH ASSOCIATES
T: +960 333 3528
E: info@epoch.associates
W: wwww.epoch.associates
A: G. Rosary West,
Husnuheenaa Magu, Male', Maldives

FEEDBACK INFRA
Making Infrastructure Happen

Drawn: A.S.A.
Checked: F.I.A.
Designed: A.S.A.
Approved: M.H.
Date: Nov 2020
SCALE (A3): 1:100
Project No: EP-WS/2019/05
Rev: R-01
Page: S.D (1)

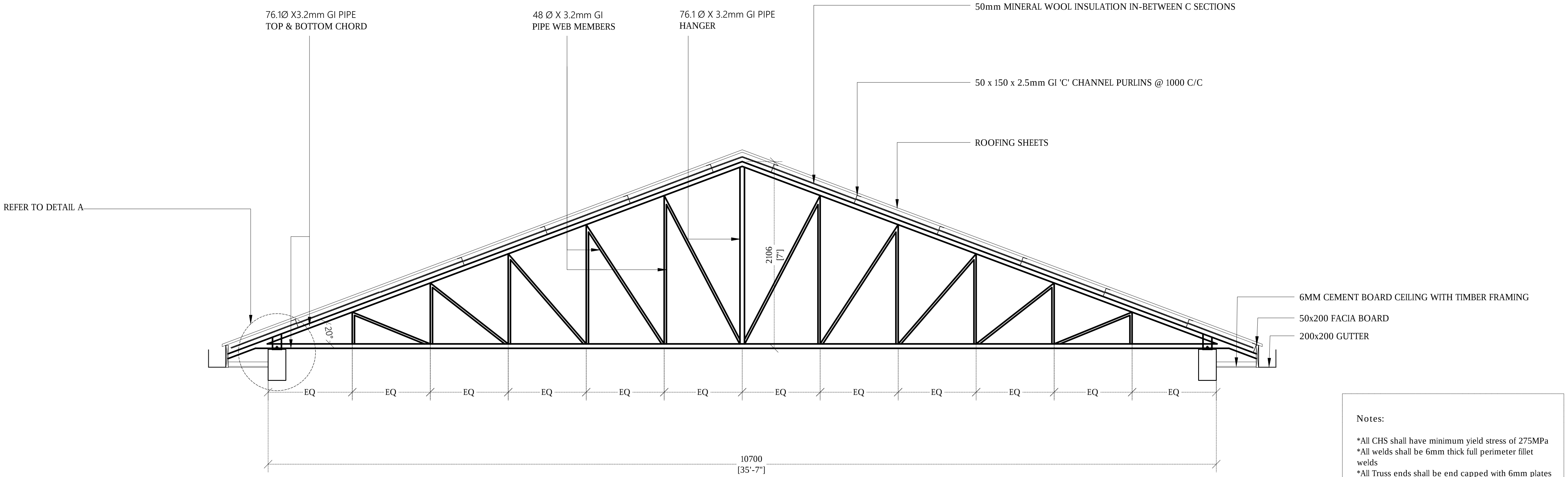
76.1Ø X3.2mm GI PIPE
TOP & BOTTOM CHORD
48 Ø X 3.2mm GI
PIPE WEB MEMBERS
76.1 Ø X 3.2mm GI PIPE
HANGER
50mm MINERAL WOOL INSULATION IN-BETWEEN C SECTIONS
50 x 150 x 2.5mm GI 'C' CHANNEL PURLINS @ 1000 C/C
ROOFING SHEETS
REFER TO DETAIL A
2106
[7']
20°
6MM CEMENT BOARD CEILING WITH TIMBER FRAMING
50x200 FACIA BOARD
200x200 GUTTER
EQ
EQ
EQ
EQ
EQ
EQ
EQ
EQ
EQ
EQ
EQ
EQ
10700
[35'-7"]

TRUSS DETAIL TR1 @ GRID 2

1:50

Notes:

*All CHS shall have minimum yield stress of 275MPa
*All welds shall be 6mm thick full perimeter fillet welds
*All Truss ends shall be end capped with 6mm plates
*All truss members shall be protected with anti corrosive coatings

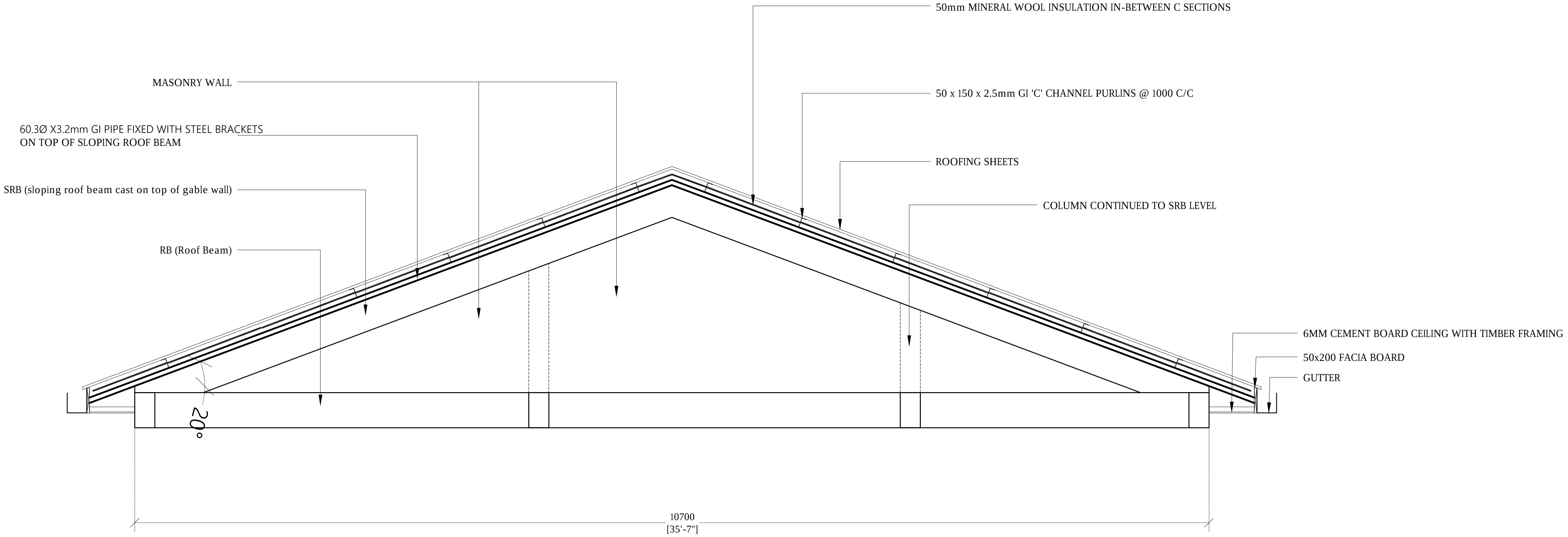
50mm MINERAL WOOL INSULATION IN-BETWEEN C SECTIONS
MASONRY WALL
50 x 150 x 2.5mm GI 'C' CHANNEL PURLINS @ 1000 C/C
60.3Ø X3.2mm GI PIPE FIXED WITH STEEL BRACKETS
ON TOP OF SLOPING ROOF BEAM
ROOFING SHEETS
SRB (sloping roof beam cast on top of gable wall)
COLUMN CONTINUED TO SRB LEVEL
RB (Roof Beam)
6MM CEMENT BOARD CEILING WITH TIMBER FRAMING
50x200 FACIA BOARD
GUTTER
20°
10700
[35'-7"]

DETAIL OF 63Øx3.2MM PIPE FIXED ON GRID 1,3,4 & 5

1:50

Legend

Note:

R01	NOV 2020		A.S.A.	F.I.A.	M.H.
REV. NO.	Date	Revision Description	Drawn	Chkd	Appd.

Title:
Consultancy Services for
Survey, Design and EIA works of
Water Supply and Sewerage
Facilities
in 6 Islands, Maldives – Package 5
Sub Title:
Water Supply System in V. Keyodhoo

Client:
Ministry of National Planning, Housing and
Infrastructure, Republic of Maldives

T: +960 333 3528
E: info@epoch.associates
W: wwww.epoch.associates
A: G. Rosary West,
Husnuheenaa Magu, Male', Maldives

Drawn: A.S.A.	Checked: F.I.A.
Designed: A.S.A.	Approved: M.H.
Date: Nov 2020	SCALE (A3): 1:100

Project No: EP-WS/2019/05

Rev: R-01

Page: S.D (2)

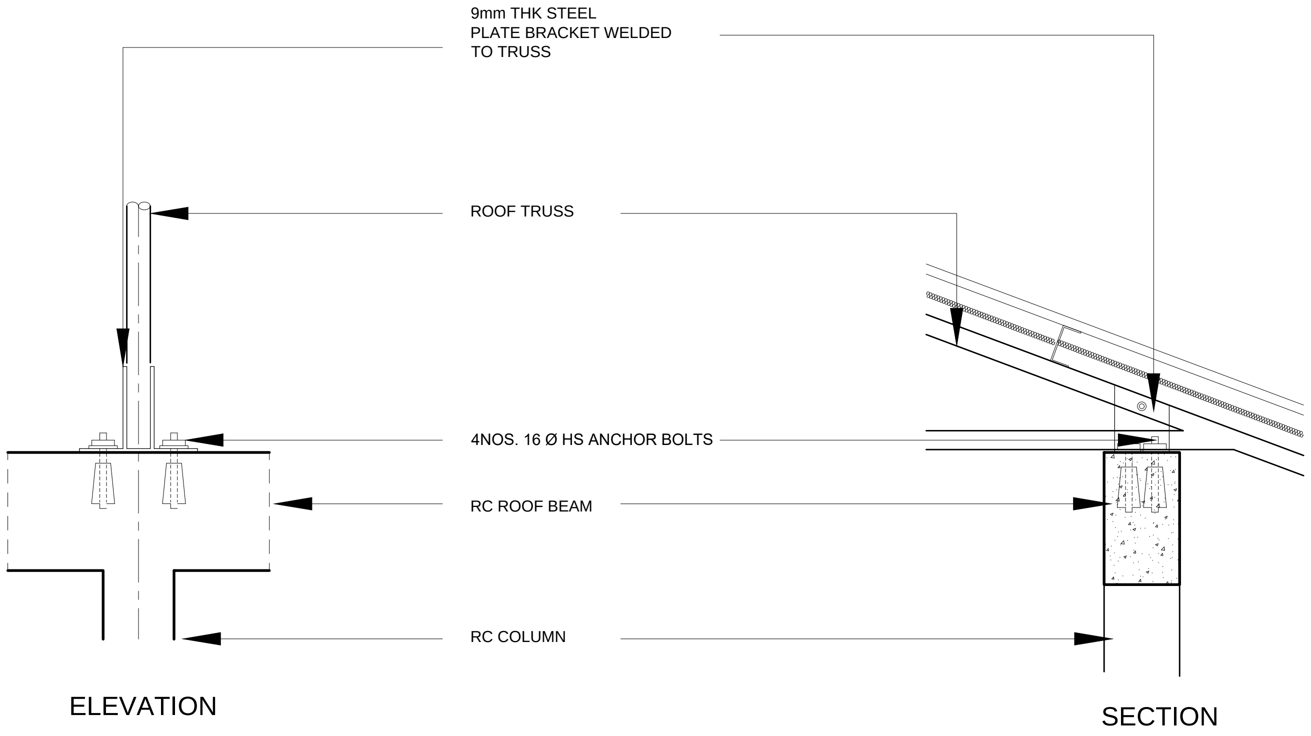
9mm THK STEEL
PLATE BRACKET WELDED
TO TRUSS
ROOF TRUSS
4NOS. 16 Ø HS ANCHOR BOLTS
RC ROOF BEAM
RC COLUMN
ELEVATION
SECTION

DETAIL A

1:20

Legend

Note:

R01	NOV 2020		A.S.A.	F.I.A.	M.H.
REV. NO.	Date	Revision Description	Drawn	Chkd	Appd.

Title:

Consultancy Services for
Survey, Design and EIA works of
Water Supply and Sewerage
Facilities
in 6 Islands, Maldives – Package 5

Sub Title:

Water Supply System in V. Keyodhoo

Client:

Ministry of National Planning, Housing and
Infrastructure, Republic of Maldives

EPOCH ASSOCIATES

T: +960 333 3528
E: info@epoch.associates
W: wwww.epoch.associates
A: G. Rosary West,
Husnuheenaa Magu, Male', Maldives

FEEDBACK INFRA
Making Infrastructure Happen

Drawn: A.S.A.
Checked: F.I.A.
Designed: A.S.A.
Approved: M.H.
Date: Nov 2020
SCALE (A3): 1:100
Project No: EP-WS/2019/05
Rev: R-01
Page: S.D (3)

ARCHITECTURAL AND STRUCTURAL DRAWINGS OF

PROPOSED SINGLE STOREY BUILDING AT

RO PLANT VEHICLE SHED, V.KEYODHOO

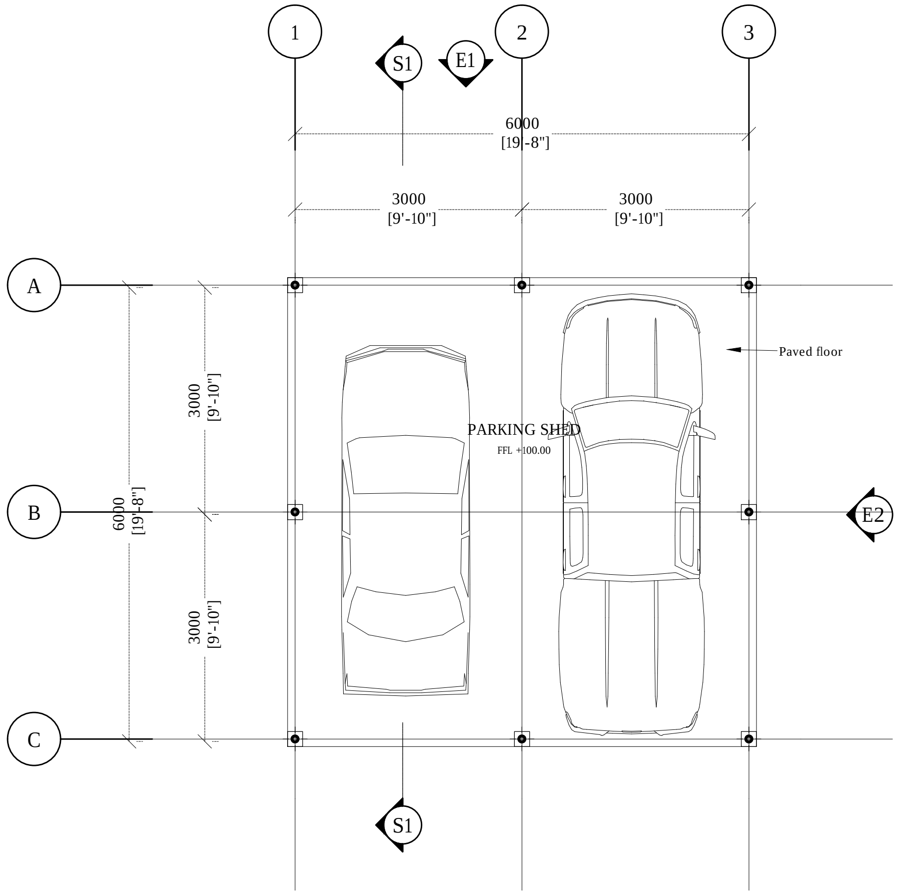
1
2
3
S1
E1
6000
[19'-8"]
3000
[9'-10"]
3000
[9'-10"]
A
B
C
3000
[9'-10"]
6000
[19'-8"]
3000
[9'-10"]
Paved floor
PARKING SHED
FFL +100.00
E2
S1

GROUND FLOOR PLAN

1:100

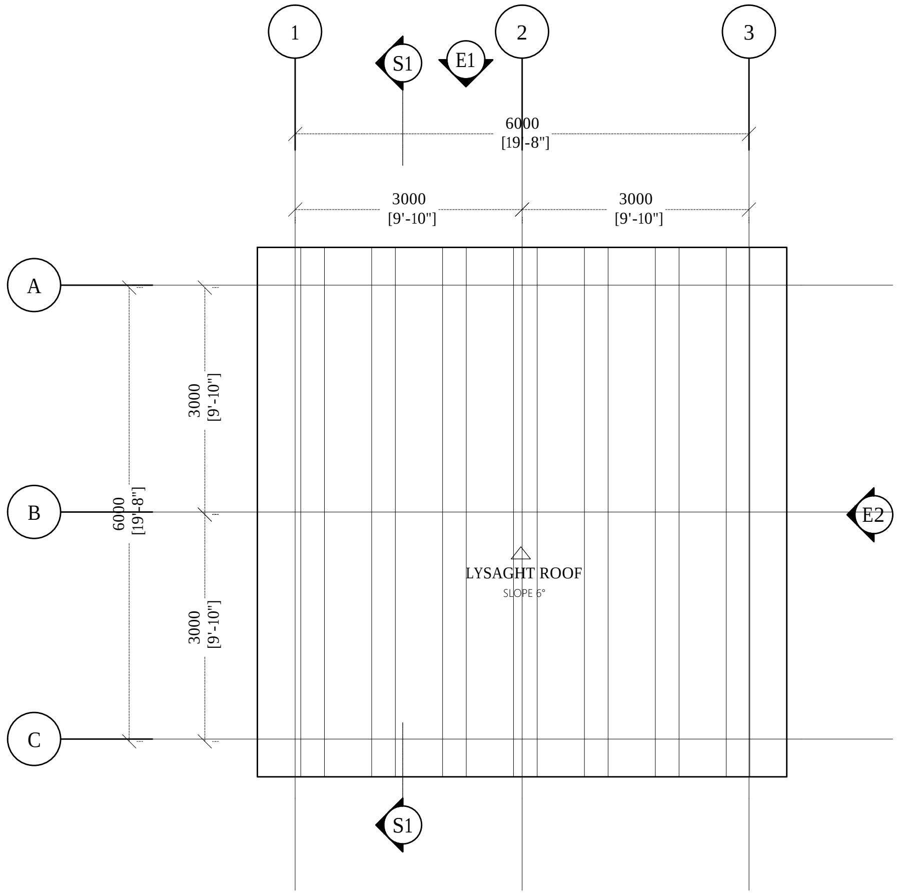
1
2
3
S1
E1
6000
[19'-8"]
3000
[9'-10"]
3000
[9'-10"]
A
B
C
3000
[9'-10"]
6000
[19'-8"]
3000
[9'-10"]
LYSAGHT ROOF
SLOPE 6°
E2
S1

ROOF PLAN

1:100

Legend

Note:

R01	NOV 2020		A.S.A.	F.I.A.	M.H.
REV. NO.	Date	Revision Description	Drawn	Chkd	Appd.

Title:

Consultancy Services for
Survey, Design and EIA works of
Water Supply and Sewerage
Facilities
in 6 Islands, Maldives – Package 5

Sub Title:

Water Supply System in V. Keyodhoo

Client:

Ministry of National Planning, Housing and
Infrastructure, Republic of Maldives

EPOCH ASSOCIATES

T: +960 333 3528
E: info@epoch.associates
W: wwww.epoch.associates
A: G. Rosary West,
Husnuheenaa Magu, Male', Maldives

FEEDBACK INFRA
Making Infrastructure Happen

Drawn: A.S.A.
Checked: F.I.A.
Designed: A.S.A.
Approved: M.H.
Date: Nov 2020
SCALE (A3): 1:100
Project No: EP-WS/2019/05
Rev: R-01
Page: A.6(1)

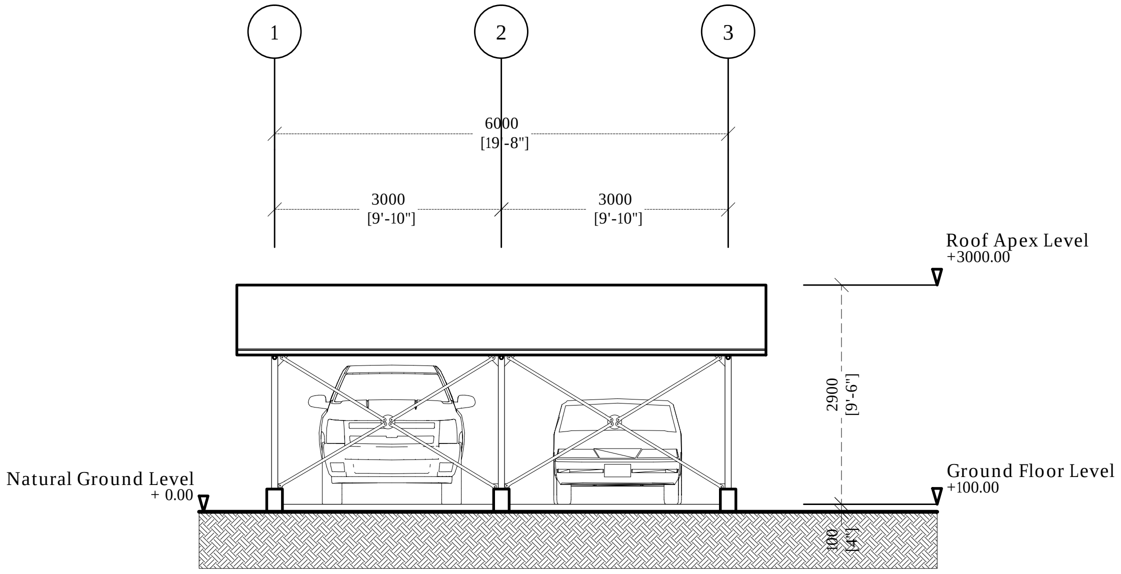
1
2
3
6000
[19'-8"]
3000
[9'-10"]
3000
[9'-10"]
Roof Apex Level
+3000.00
2900
[9'-6"]
Natural Ground Level
+ 0.00
Ground Floor Level
+100.00
100
[4"]

ELEVATION E1

1:100

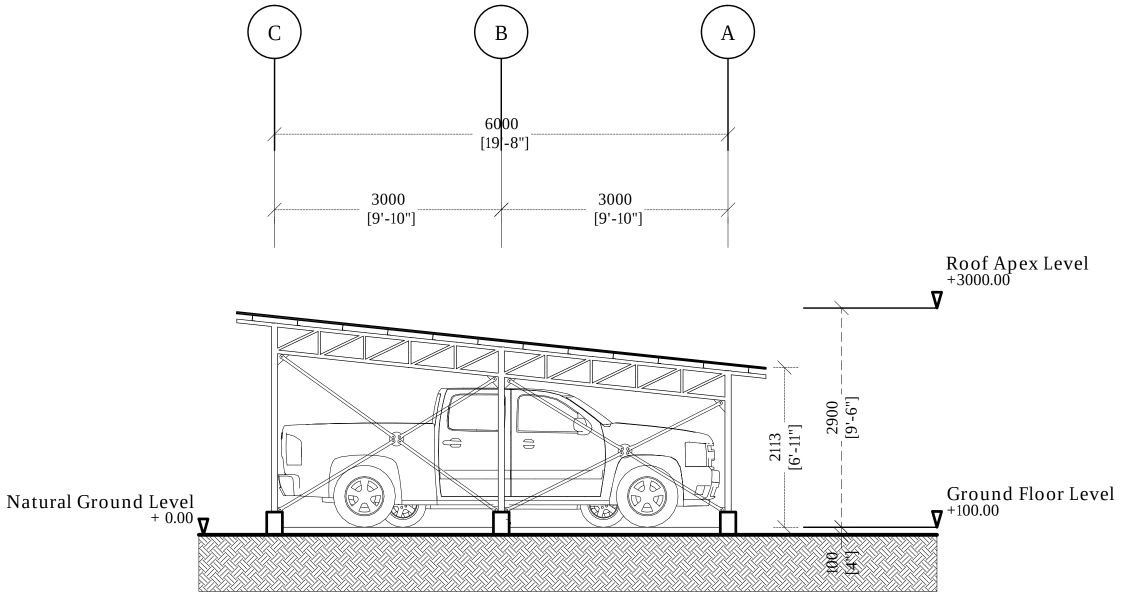
C
B
A
6000
[19'-8"]
3000
[9'-10"]
3000
[9'-10"]
Roof Apex Level
+3000.00
2113
[6'-11"]
2900
[9'-6"]
Natural Ground Level
+ 0.00
Ground Floor Level
+100.00
100
[4"]

ELEVATION E2

1:100

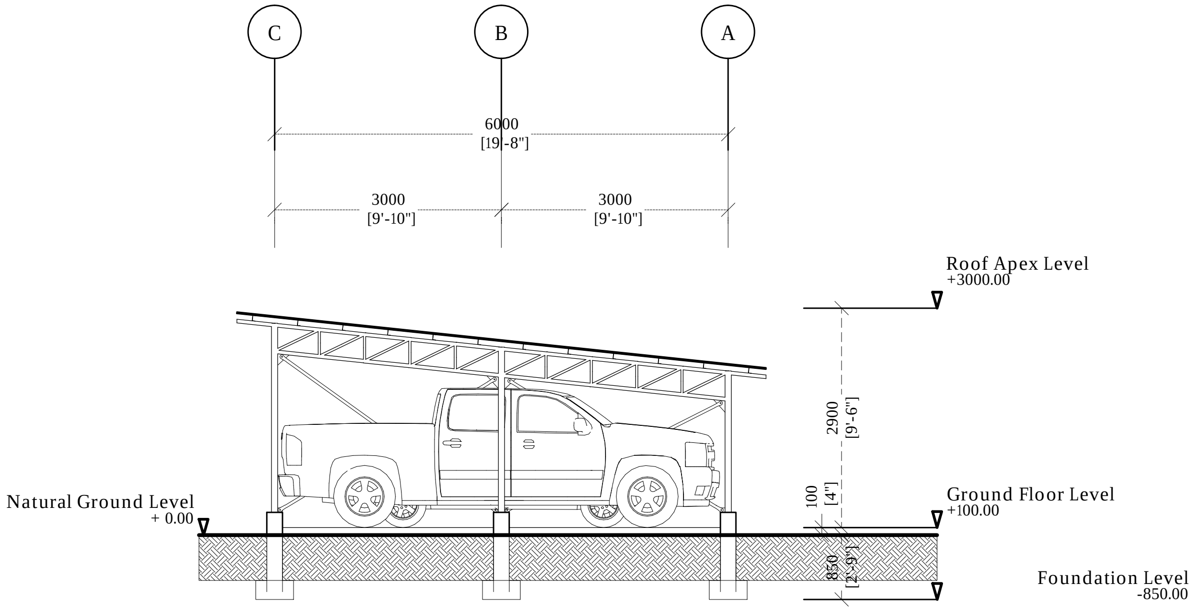
C
B
A
6000
[19'-8"]
3000
[9'-10"]
3000
[9'-10"]
Roof Apex Level
+3000.00
2900
[9'-6"]
Natural Ground Level
+ 0.00
100
[4"]
Ground Floor Level
+100.00
850
[2'-9"]
Foundation Level
-850.00

SECTION S1

1:100

Legend

Note:

R01	NOV 2020		A.S.A.	F.I.A.	M.H.
REV. NO.	Date	Revision Description	Drawn	Chkd	Appd.

Title:
Consultancy Services for
Survey, Design and EIA works of
Water Supply and Sewerage
Facilities
in 6 Islands, Maldives – Package 5

Sub Title:
Water Supply System in V. Keyodhoo

Client:
Ministry of National Planning, Housing and
Infrastructure, Republic of Maldives

T: +960 333 3528
E: info@epoch.associates
W: wwww.epoch.associates
A: G. Rosary West,
Husnuheenaa Magu, Male', Maldives

Drawn: A.S.A.
Checked: F.I.A.
Designed: A.S.A.
Approved: M.H.
Date: Nov 2020
SCALE (A3): 1:100
Project No: EP-WS/2019/05
Rev: R-01
Page: A.6(2)

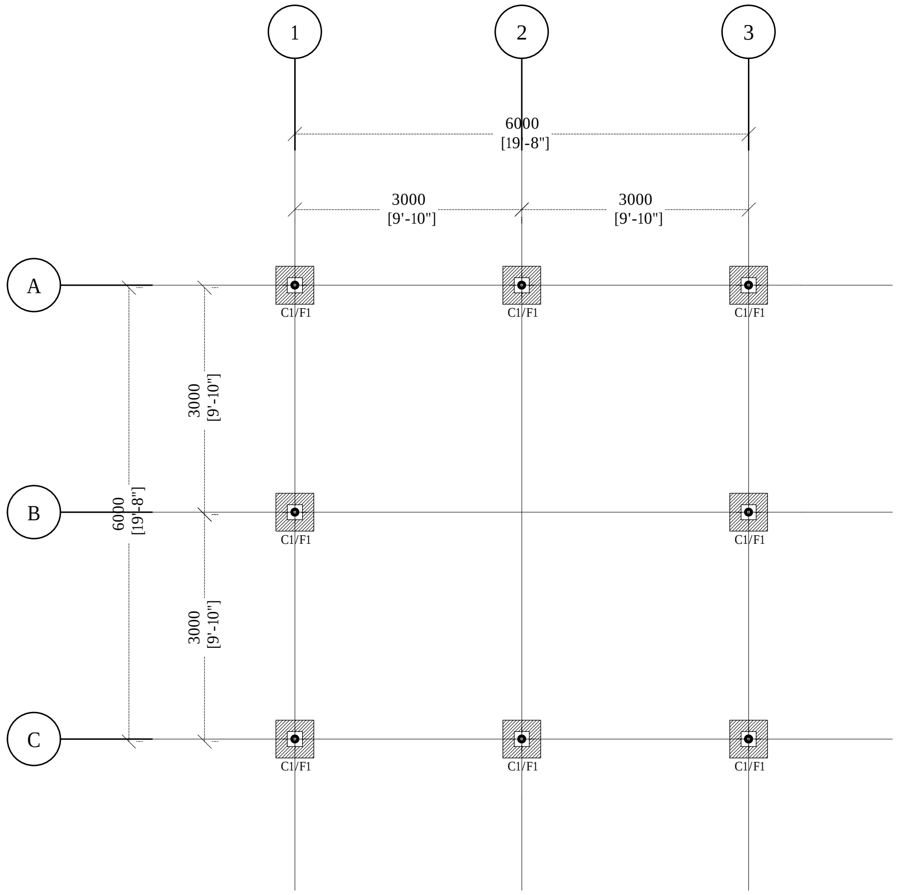
1
2
3
6000
[19'-8"]
3000
[9'-10"]
3000
[9'-10"]
A
B
C
C1/F1
3000
[9'-10"]
3000
[9'-10"]
6000
[19'-8"]

FOUNDATION PLAN

1:100

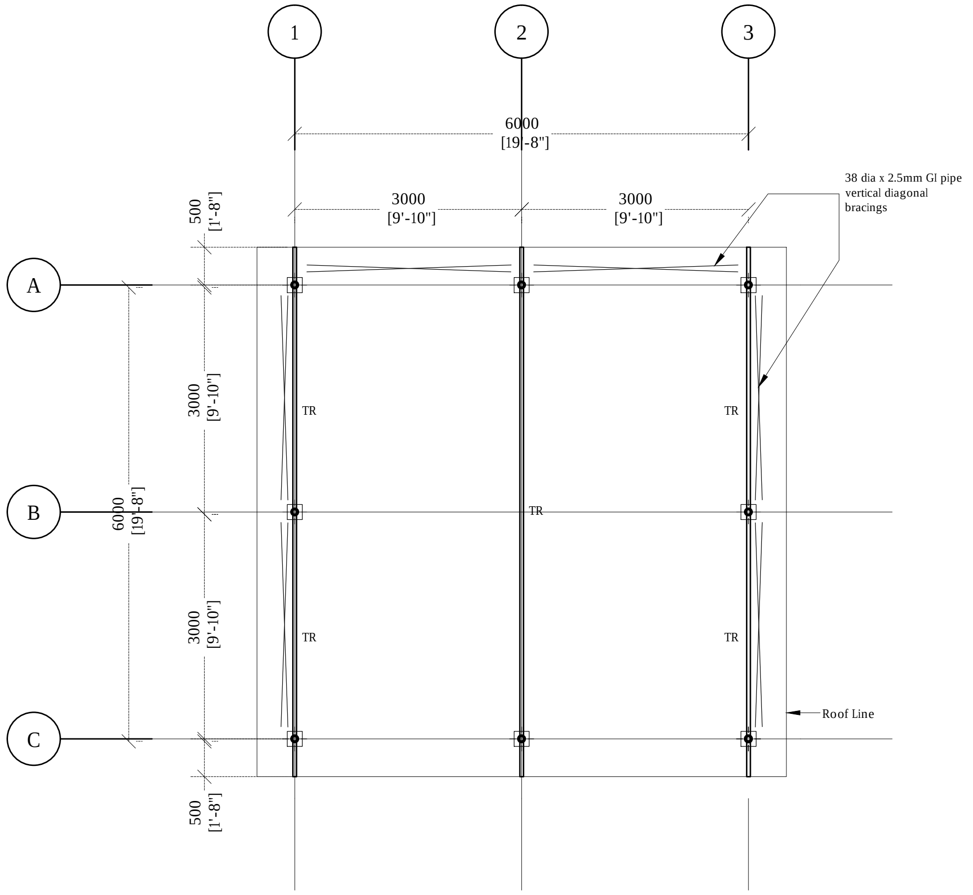
1
2
3
6000
[19'-8"]
3000
[9'-10"]
3000
[9'-10"]
38 dia x 2.5mm GI pipe
vertical diagonal
bracings
500
[1'-8"]
A
B
C
TR
3000
[9'-10"]
3000
[9'-10"]
6000
[19'-8"]
Roof Line
500
[1'-8"]

ROOF TRUSS PLAN

1:100

Legend

Note:

R01	NOV 2020		A.S.A.	F.I.A.	M.H.
REV. NO.	Date	Revision Description	Drawn	Chkd	Appd.

Title:

Consultancy Services for
Survey, Design and EIA works of
Water Supply and Sewerage
Facilities
in 6 Islands, Maldives – Package 5

Sub Title:

Water Supply System in V. Keyodhoo

Client:

Ministry of National Planning, Housing and
Infrastructure, Republic of Maldives

T: +960 333 3528
E: info@epoch.associates
W: wwww.epoch.associates
A: G. Rosary West,
Husnuheenaa Magu, Male', Maldives

Drawn: A.S.A.
Checked: F.I.A.
Designed: A.S.A.
Approved: M.H.
Date: Nov 2020
SCALE (A3): 1:100
Project No: EP-WS/2019/05
Rev: R-01
Page: A.1 (3)

Legend

Note:

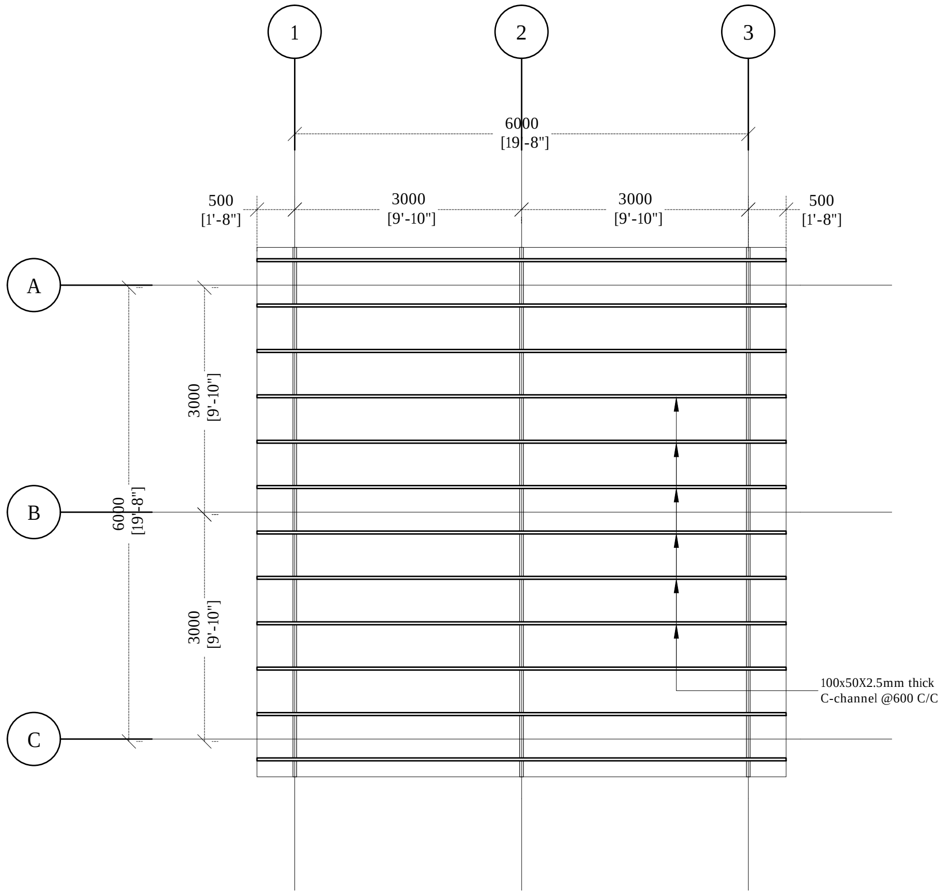
1
2
3
6000
[19'-8"]
500
[1'-8"]
3000
[9'-10"]
3000
[9'-10"]
500
[1'-8"]
A
B
C
3000
[9'-10"]
6000
[19'-8"]
3000
[9'-10"]
100x50X2.5mm thick
C-channel @600 C/C

ROOF FRAMING PLAN

1:100

R01	NOV 2020		A.S.A.	F.I.A.	M.H.
REV. NO.	Date	Revision Description	Drawn	Chkd	Appd.

Title:
Consultancy Services for
Survey, Design and EIA works of
Water Supply and Sewerage
Facilities
in 6 Islands, Maldives – Package 5
Sub Title:
Water Supply System in V. Keyodhoo

Client:
Ministry of National Planning, Housing and
Infrastructure, Republic of Maldives

EPOCH ASSOCIATES
T: +960 333 3528
E: info@epoch.associates
W: wwww.epoch.associates
A: G. Rosary West,
Husnuheenaa Magu, Male', Maldives

FEEDBACK INFRA
Making Infrastructure Happen

Drawn: A.S.A.
Checked: F.I.A.
Designed: A.S.A.
Approved: M.H.
Date: Nov 2020
SCALE (A3): 1:100
Project No: EP-WS/2019/05
Rev: R-01
Page: S.4(1)

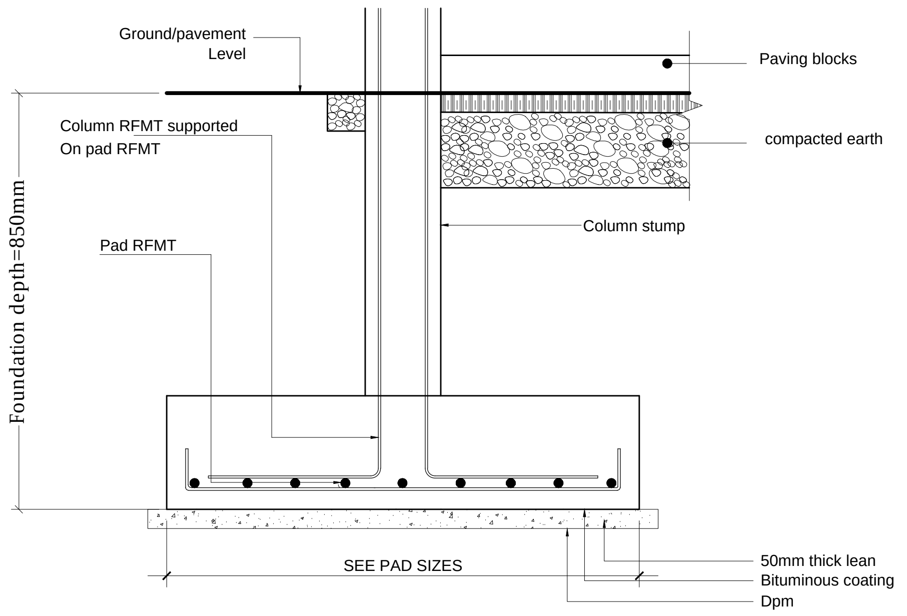
Ground/pavement Level
Paving blocks
Column RFMT supported On pad RFMT
compacted earth
Column stump
Pad RFMT
Foundation depth=850mm
SEE PAD SIZES
50mm thick lean
Bituminous coating
Dpm

F1 - 500x500x250 - T10@150C/C B/W (B)

FOUNDATION PAD DETAILS

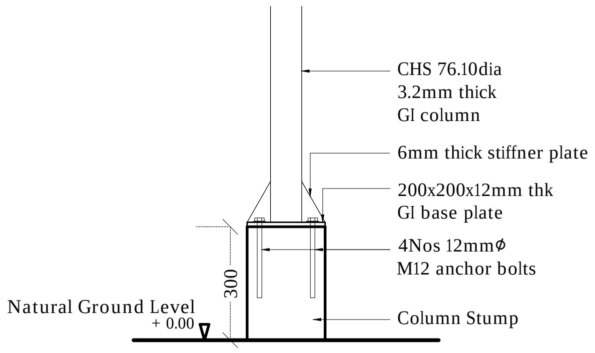
CHS 76.10dia
3.2mm thick
Gl column
6mm thick stiffner plate
200x200x12mm thk
Gl base plate
4Nos 12mmϕ
M12 anchor bolts
Column Stump
300
Natural Ground Level
+ 0.00

VEHICLE SHED
TYPICAL FOOTING DETAIL

1:20

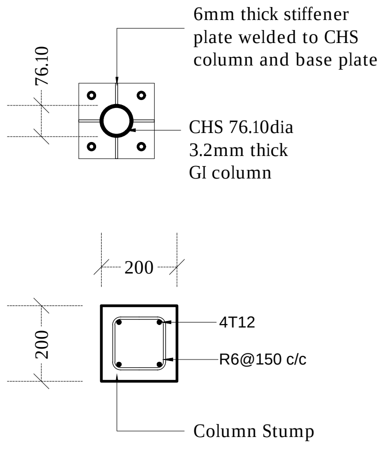
6mm thick stiffener
plate welded to CHS
column and base plate
76.10
CHS 76.10dia
3.2mm thick
Gl column
200
200
4T12
R6@150 c/c
Column Stump

COLUMN DETAIL

1:20

Legend

Note:

*All CHS shall have minimum yield stress of 275MPa
*All welds shall be 6mm thick full perimeter fillet welds
*All Truss ends shall be end capped with 6mm plates
*All truss members shall be protected with anti corrosive coatings
*38 dia x 2.5mm Gl pipe to be used for all bracings.
*Cover for footings shall be 50mm.
*Cover for columns shall be 40mm.
*Concrete shall be of grade C25.

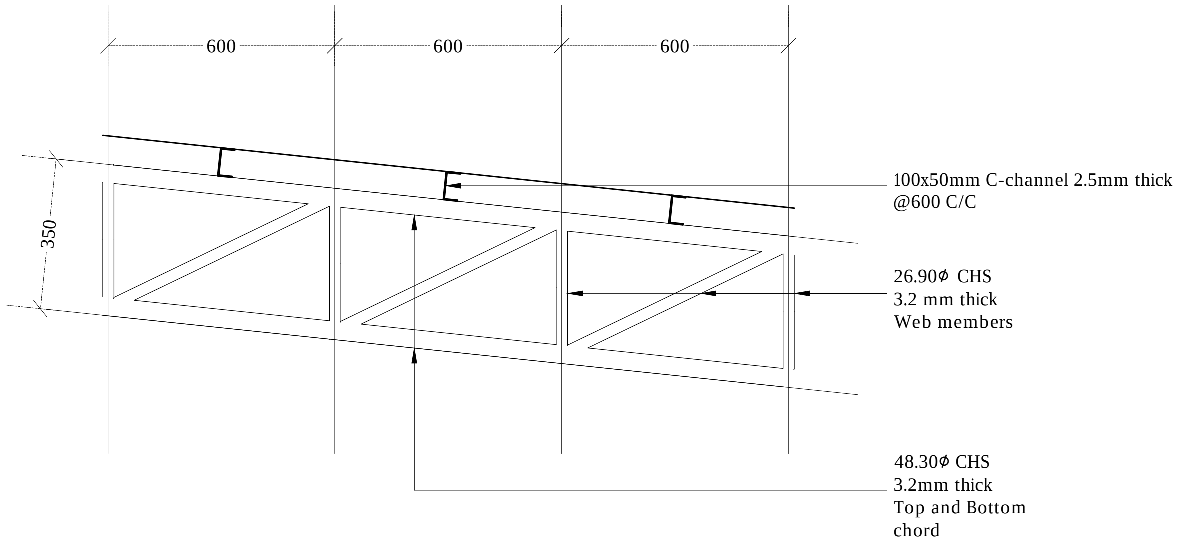
600
600
600
350
100x50mm C-channel 2.5mm thick
@600 C/C
26.90ϕ CHS
3.2 mm thick
Web members
48.30ϕ CHS
3.2mm thick
Top and Bottom
chord

TRUSS DETAIL

1:20

R01	NOV 2020		A.S.A.	F.I.A.	M.H.
REV. NO.	Date	Revision Description	Drawn	Chkd	Appd.

Title:
Consultancy Services for
Survey, Design and EIA works of
Water Supply and Sewerage
Facilities
in 6 Islands, Maldives – Package 5
Sub Title:
Water Supply System in V. Keyodhoo

Client:
Ministry of National Planning, Housing and
Infrastructure, Republic of Maldives

EPOCH ASSOCIATES
T: +960 333 3528
E: info@epoch.associates
W: wwww.epoch.associates
A: G. Rosary West,
Husnuheenaa Magu, Male', Maldives

FEEDBACK INFRA

Drawn: A.S.A.	Checked: F.I.A.
Designed: A.S.A.	Approved: M.H.
Date: Nov 2020	SCALE (A3): 1:50
Project No: EP-WS/2019/05	
Rev: R-01	Page: S.4(2)

BUILDING SERVICES DRAWINGS OF

PROPOSED SINGLE STOREY BUILDING AT

RO PLANT ADMIN BUILDING, V.KEYODHOO

For Ministry of National Planning, Housing and Infrastructure

CONTENTS

BUILDING SERVICES DRAWINGS	
GROUND FLOOR POWER AND ACV LAYOUT	PAC-01
GROUND FLOOR FDP LAYOUT	FDP-01
GROUND FLOOR LIGHTING LAYOUT	EL-01
GROUND FLOOR PLUMBING LAYOUT	PL-01
GROUND FLOOR DRAINAGE LAYOUT	DR-01
ROOF DRAINAGE LAYOUT	DR-02
SITE LIGHTING LAYOUT	EL-02
VEHICLE PARKING AREA - PLUMBING LAYOUT	PL-02
VEHICLE PARKING AREA - DRAINAGE LAYOUT	DR-03

Legend

⏚	13A Twin Socket
⏚	13A Twin Socket With USB Ports
◪	15A Switched Socket @ H.L.
⏚	15A Socket In Polycarbonate Box
◪	15A Switch @ 1200mm From F.F.L.
⏚	13A Power Socket
◣	Distribution Board
HL.	High Level
——	82Ø PVC Duct For Tel./Internet Cable Lead In Below Ground Slab
—·—	Main Incoming Cable For Power In 110Ø PVC Duct Below Ground Slab
ISB	Internet Switchboard
▲	Telephone Outlet
◭	Computer Network Outlet
▭	Emergency Light
M	Electricity Meter

Notes: -

- All 13A Power Outlets For Kitchen Hood Or Under Cabinet Or Wardrobe Lights At 1800mm From F.F.L.
- All Twin Sockets At 300mm From F.F.L. Except Located At Kitchen Cupboard Area Which Shall Be At 1200mm From F.F.L.
- All Computer, TV And Telephone Points At 300mm From F.F.L.
- All 20A Switched Neon Indicator At 1200mm From F.F.L.

Legend

━━	Refrigerant Pipes
—·—	25Ø Condensate Drain Pipe
➤	40Ø Condensate Drain Riser Pipe
AC	Wall Mount Air Conditioner
CU	Outdoor Condensing Unit
⊞	Ceiling Mounted Exhaust Fan 90m3/hr
▯	Wall Mounted Exhaust Fan
▯	Single Intake, Centrifugal, External Motor, 800m3/hr
▭	Fresh Air Intake Grille/screen 1200 x 600

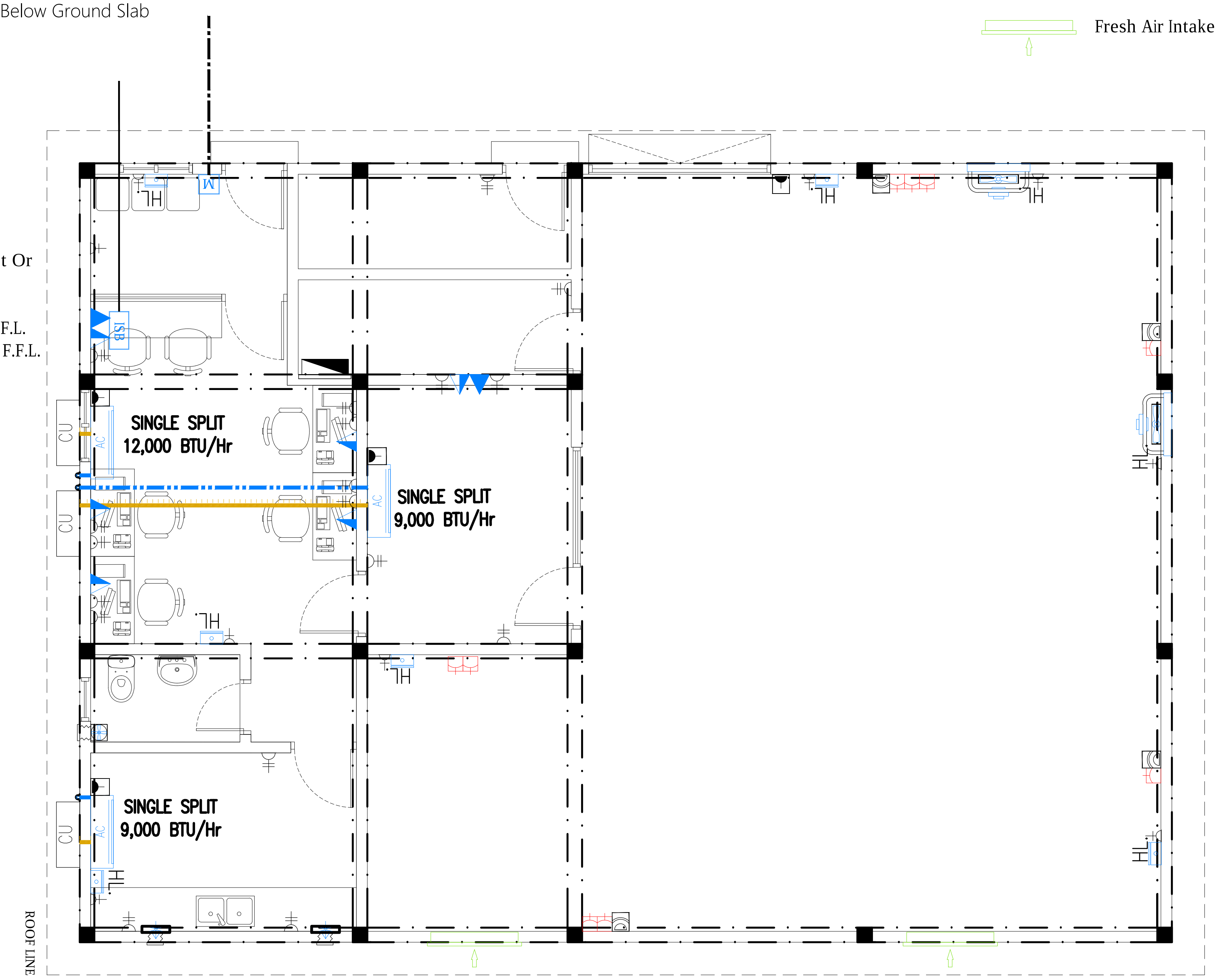

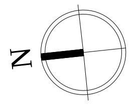

GROUND FLOOR POWER AND ACV LAYOUT

1:75

Legend

Note:

- All 13A Power Outlets For Kitchen Hood Or Under Cabinet Or Wardrobe Lights At 1800mm From F.F.L.
- All Twin Sockets At 300mm From F.F.L. Except Located At Kitchen Cupboard Area Which Shall Be At 1200mm From F.F.L.
- All Computer, TV And Telephone Points At 300mm From F.F.L.
- All 20A Switched Neon Indicator At 1200mm From F.F.L.

REV. NO.	Date	Revision Description	Drawn	Chkd	Appd.
R01	NOV 2020		H.R.	M.R.	M.R.

Title:
Consultancy Services for Survey, Design and EIA works of Water Supply and Sewerage Facilities
in 6 Islands, Maldives – Package 5
Sub Title:
Water Supply System in V. Keyodhoo

Client:
Ministry of National Planning, Housing and Infrastructure, Republic of Maldives

EPOCH ASSOCIATES
T: +960 333 3528
E: info@epoch.associates
W: wwww.epoch.associates
A: G. Rosary West,
Husnuheenaa Magu, Male', Maldives

FEEDBACK INFRA
Making Infrastructure Happen

Drawn: H.R.
Checked: M.R.
Designed: H.R.
Approved: M.R.
Date: Nov 2020
SCALE (A3): 1:75
Project No: EP- WS/2019/05
Rev: R-01
Page: PAC-01

Legend

DCP	DCP Extinguisher (load: 6kg) In Polycarbonate Enclosure
CO2	CO_2 Extinguisher (load: 2kg) In Polycarbonate Enclosure
H2O	H_2O Extinguisher (load: 9L) In Polycarbonate Enclosure
▣	Manual Call Point
SD	Smoke Detector
HD	Heat Detector
⊗	Beacon
◠	Sounder Bell
■	Fire Blanket
- - -	2.5mm^2 Fire Retardant Low Smoke (FRLS) Cables In FRLS Conduits
FACP	Fire Alarm Control Panel
EXIT	Exit Sign

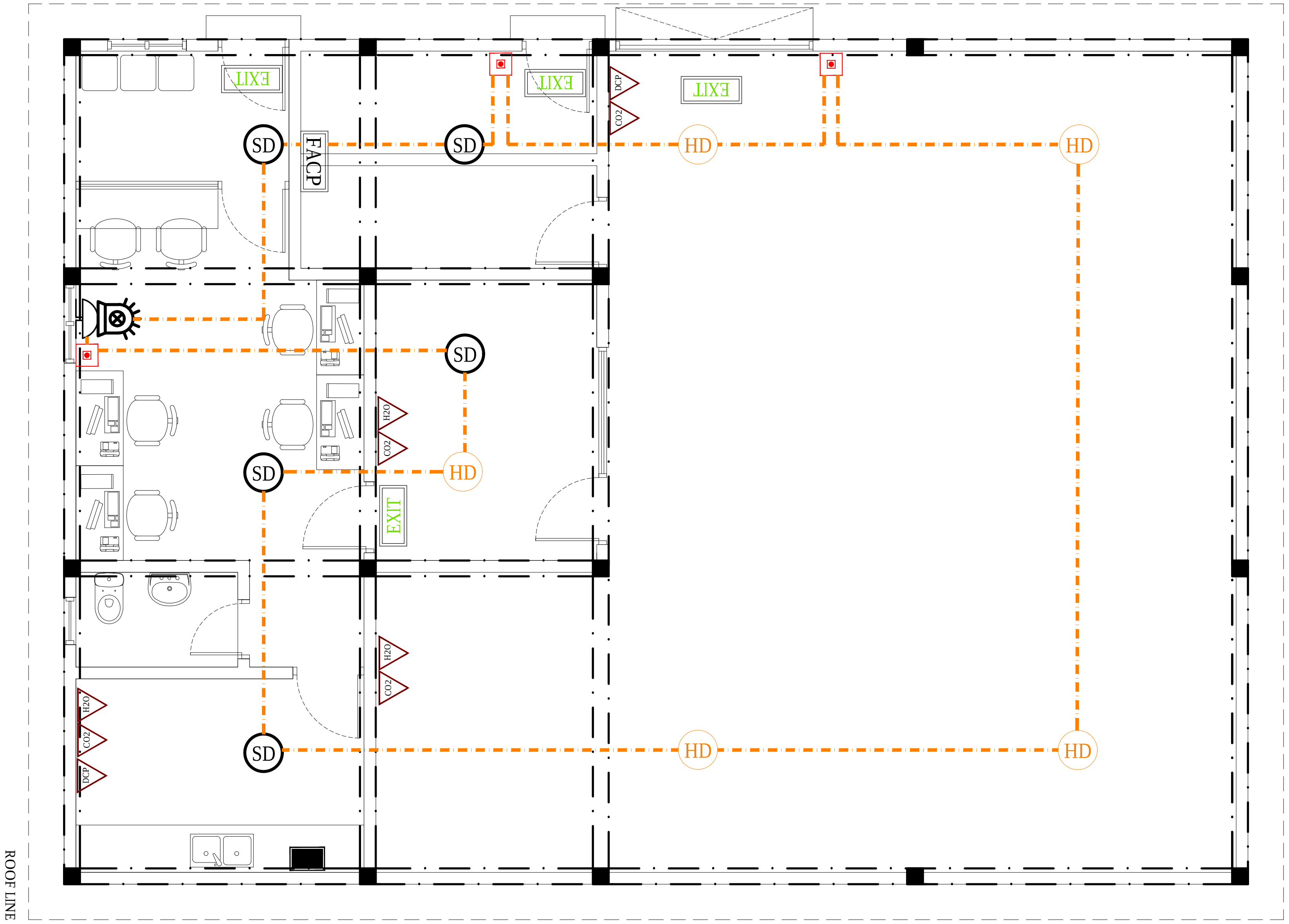

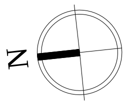

GROUND FLOOR FDP LAYOUT

1:75

Legend

Note:

REV. NO.	Date	Revision Description	Drawn	Chkd	Appd.
R01	NOV 2020		H.R.	M.R.	M.R.

Title:
Consultancy Services for Survey, Design and EIA works of Water Supply and Sewerage Facilities
in 6 Islands, Maldives – Package 5
Sub Title:
Water Supply System in V. Keyodhoo

Client:
Ministry of National Planning, Housing and Infrastructure, Republic of Maldives

EPOCH ASSOCIATES
T: +960 333 3528
E: info@epoch.associates
W: wwww.epoch.associates
A: G. Rosary West,
Husnuheenaa Magu, Male', Maldives

FEEDBACK INFRA
Making Infrastructure Happen

Drawn:	H.R.	Checked:	M.R.
Designed:	H.R.	Approved:	M.R.
Date:	Nov 2020	SCALE (A3):	1:75

Project No: EP- WS/2019/05

Rev: R-01

Page: FDP-01

Legend

Ceiling Light (12W)
Recessed Ceiling Light (12W)
Weather Proof Wall Light IP55 (12W)
60W, HPS, Low Bay Light
1|2|3|4 Light Switch (1 Gang - 4 Gang)
1|2|3|4 Two Way Light Switches (1 Gang - 4 Gang)
SINGLE INTAKE, CENTRIFUGAL, EXTERNAL MOTOR, 800M3/Hr
Ceiling Mounted Exhaust Fan 90m3/hr
Wall Mounted Exhaust Fan
Cement Board False Ceiling [200mm below beam bottom]
Plaster Board False Ceiling [200mm below beam bottom]
Plaster Board False Ceiling [at roof beam top level]

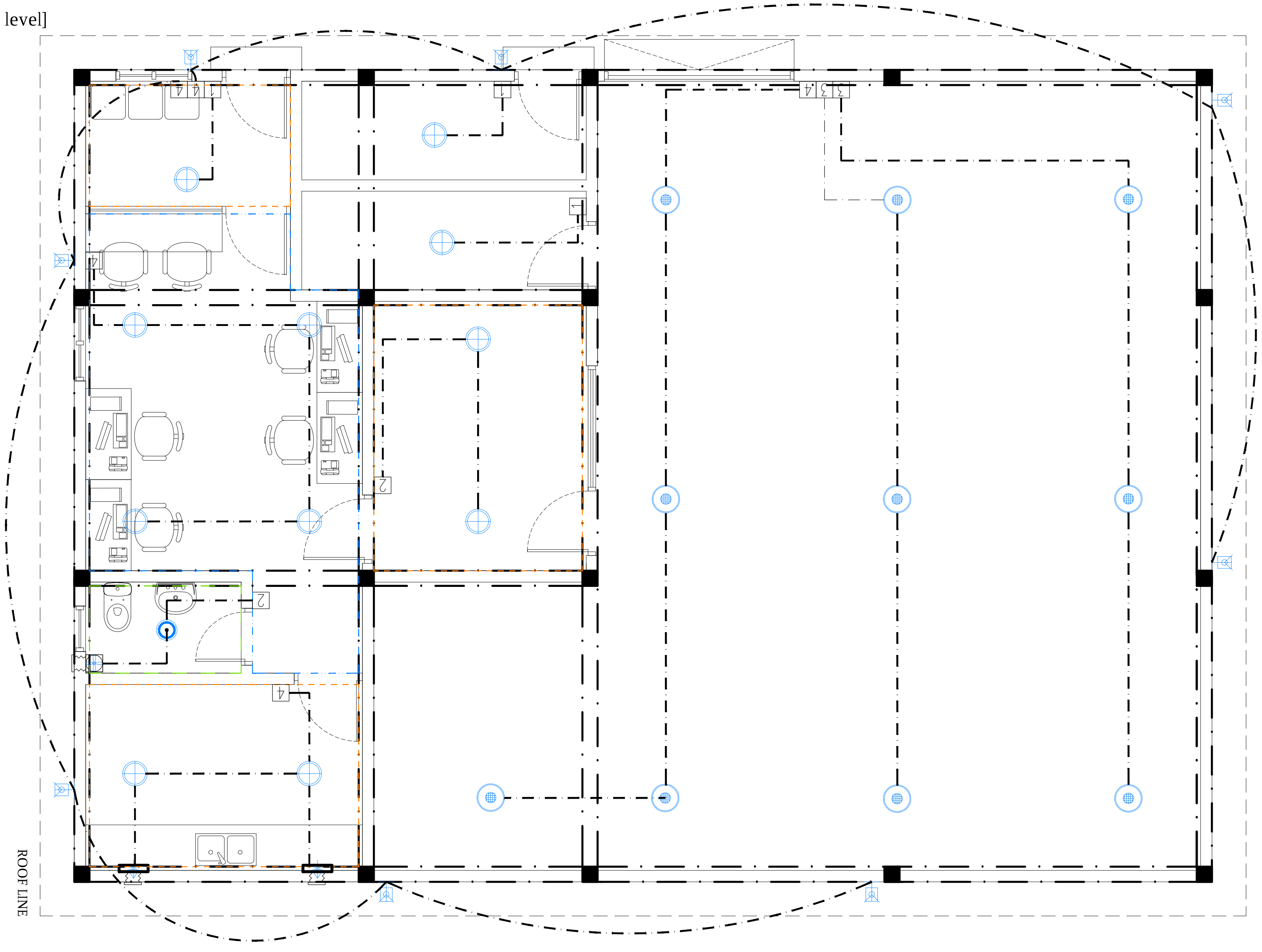

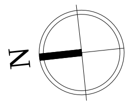

GROUND FLOOR LIGHTING LAYOUT

1:75

Legend

Note:

R01	NOV 2020		H.R.	M.R.	M.R.
REV. NO.	Date	Revision Description	Drawn	Chkd	Appd.

Title:
Consultancy Services for Survey, Design and EIA works of Water Supply and Sewerage Facilities
in 6 Islands, Maldives – Package 5
Sub Title:
Water Supply System in V. Keyodhoo

Client:
Ministry of National Planning, Housing and Infrastructure, Republic of Maldives

EPOCH ASSOCIATES
T: +960 333 3528
E: info@epoch.associates
W: wwww.epoch.associates
A: G. Rosary West,
Husnuheenaa Magu, Male', Maldives

FEEDBACK INFRA
Making Infrastructure Happen

Drawn: H.R.
Checked: M.R.
Designed: H.R.
Approved: M.R.
Date: Nov 2020
SCALE (A3): 1:75
Project No: EP- WS/2019/05
Rev: R-01
Page: EL-01

Legend

16Ø Cold Water Supply To Basin Faucet
16Ø Cold Water Supply To Bidet Shower
16Ø Cold Water Supply To Wall Tap
16Ø Cold Water Supply To Cistern
Gate Valve
Rise In Wall
MWSC Meter
25Ø Cold Water Supply Pipes Running Underground
20Ø Cold Water Supply Pipes Running In Wall

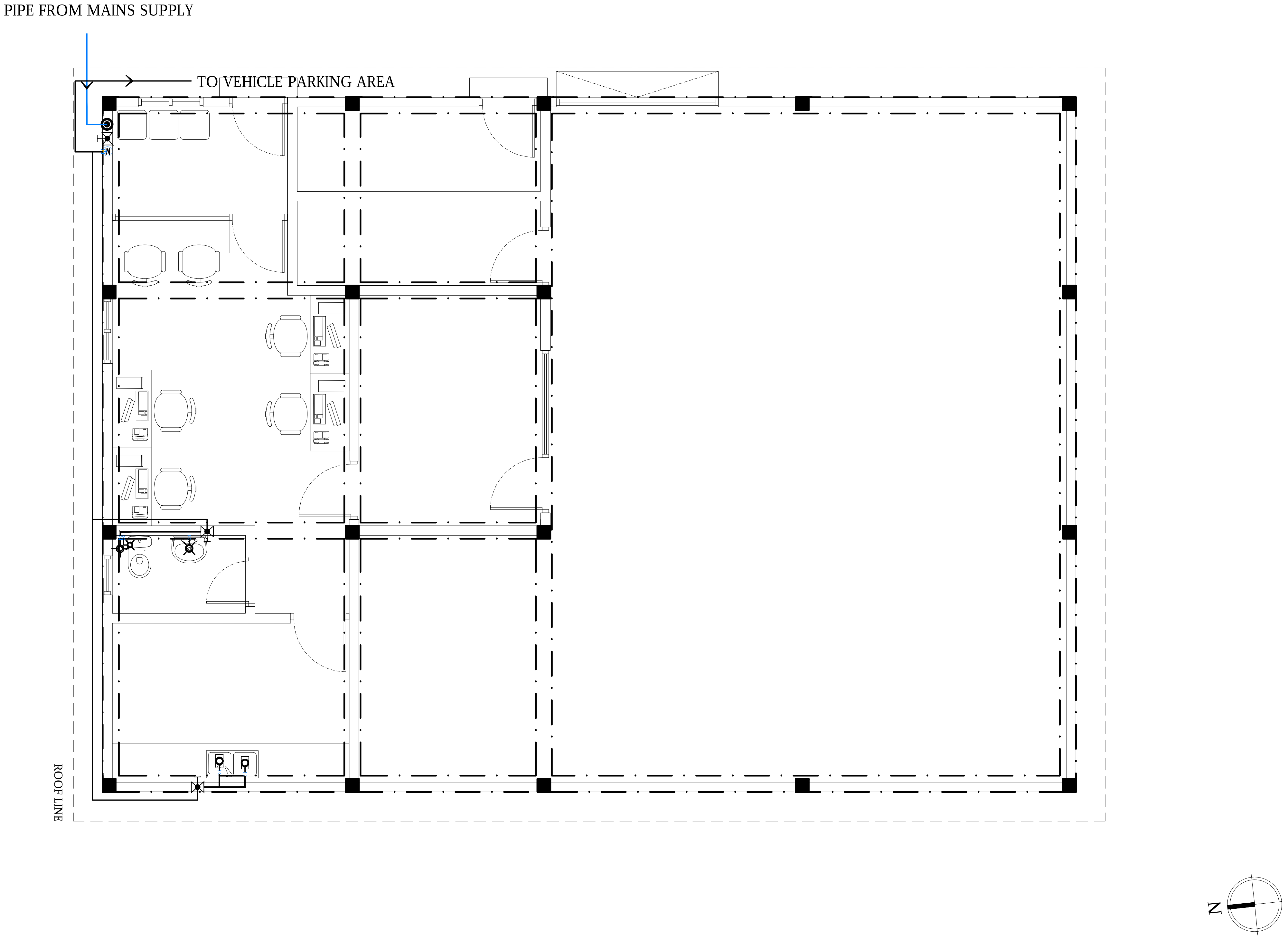

GROUND FLOOR PLUMBING LAYOUT

1:75

Legend

Note:

R01	NOV 2020		H.R.	M.R.	M.R.
REV. NO.	Date	Revision Description	Drawn	Chkd	Appd.

Title:
Consultancy Services for
Survey, Design and EIA works of
Water Supply and Sewerage
Facilities
in 6 Islands, Maldives – Package 5
Sub Title:
Water Supply System in V. Keyodhoo

Client:
Ministry of National Planning, Housing and
Infrastructure, Republic of Maldives

EPOCH ASSOCIATES
T: +960 333 3528
E: info@epoch.associates
W: wwww.epoch.associates
A: G. Rosary West,
Husnuheenaa Magu, Male', Maldives

FEEDBACK INFRA
Making Infrastructure Happen

Drawn: H.R.
Checked: M.R.
Designed: H.R.
Approved: M.R.
Date: Nov 2020
SCALE (A3): 1:75
Project No: EP- WS/2019/05
Rev: R-01
Page: PL-01

Legend

- Floor Drain
- Floor Gully
- 82Ø Soil Pipe (uPVC Pipe)
- 82Ø Soil Vent Pipe (uPVC Pipe)
- 63Ø Waste Pipe (uPVC Pipe)
- 63Ø Waste Vent Pipe (uPVC Pipe)
- 40Ø Waste Pipe (uPVC Pipe)
- 50Ø Manhole Vent Pipe (uPVC Pipe)
- 110Ø Rain Water Pipes (uPVC Pipe)
- Gully Trap
- 110Ø Rainwater Outlet
- Clean Out Point
- Bottle Trap

Notes: -

-All Drainage Pipes Should Have At A Slope Of 1/150
-All Floor Drains Should Have 'P' Traps

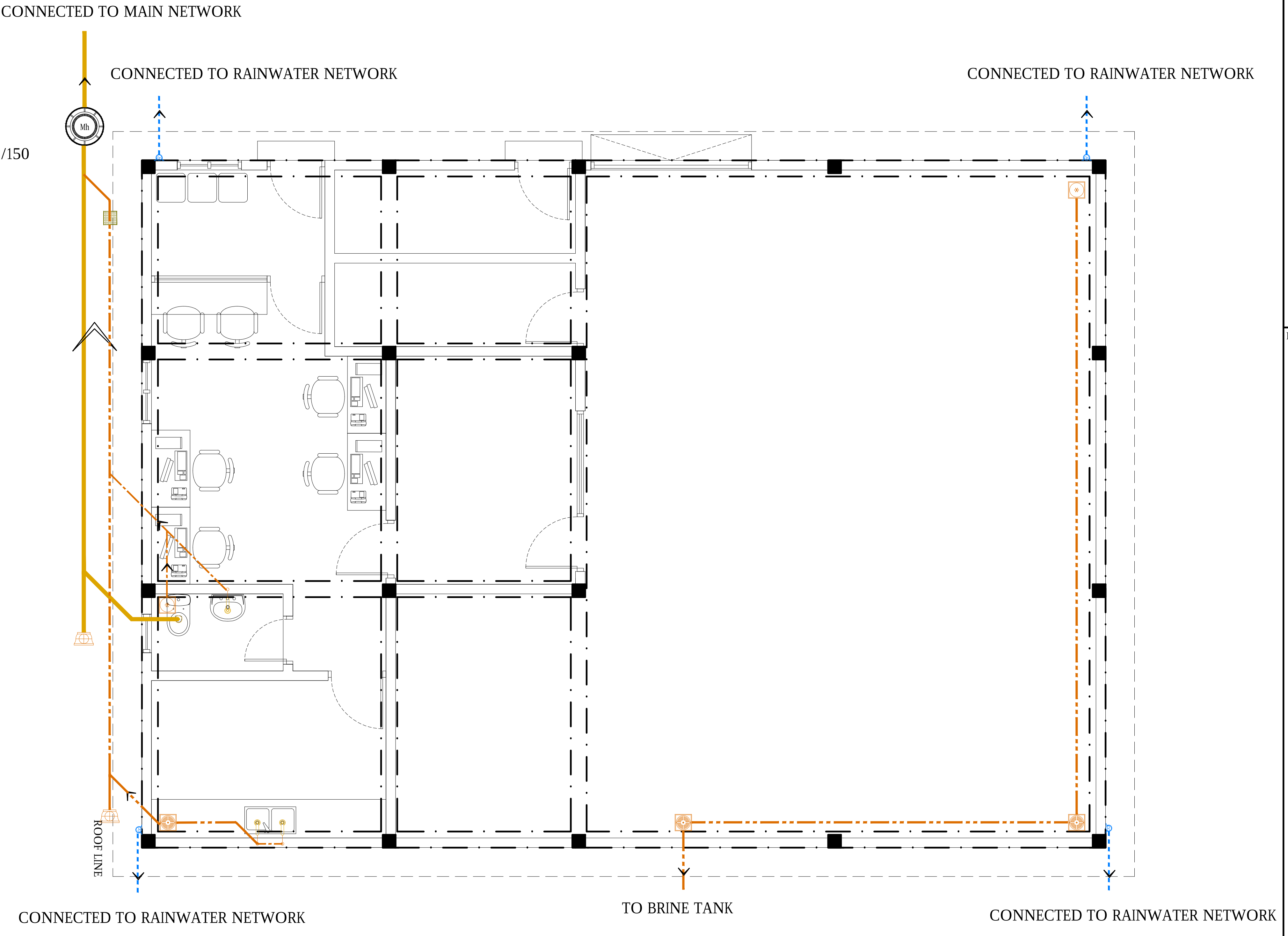
CONNECTED TO MAIN NETWORK
CONNECTED TO RAINWATER NETWORK
CONNECTED TO RAINWATER NETWORK
Mh
ROOF LINE
CONNECTED TO RAINWATER NETWORK
TO BRINE TANK
CONNECTED TO RAINWATER NETWORK

GROUND FLOOR DRAINAGE LAYOUT

1:75

Legend

Note:

-All Drainage Pipes Should Have At A Slope Of 1/150
-All Floor Drains Should Have 'P' Traps

REV. NO.	Date	Revision Description	Drawn	Chkd	Appd.
R01	NOV 2020		H.R.	M.R.	M.R.

Title:
Consultancy Services for Survey, Design and EIA works of Water Supply and Sewerage Facilities
in 6 Islands, Maldives – Package 5
Sub Title:
Water Supply System in V. Keyodhoo

Client:
Ministry of National Planning, Housing and Infrastructure, Republic of Maldives

T: +960 333 3528
E: info@epoch.associates
W: wwww.epoch.associates
A: G. Rosary West,
Husnuheenaa Magu, Male', Maldives

Drawn: H.R.
Checked: M.R.
Designed: H.R.
Approved: M.R.
Date: Nov 2020
SCALE (A3): 1:75
Project No: EP- WS/2019/05
Rev: R-01
Page: DR-01

Legend

- Floor Drain
- Floor Gully
- 82Ø Soil Pipe (uPVC Pipe)
- 82Ø Soil Vent Pipe (uPVC Pipe)
- 63Ø Waste Pipe (uPVC Pipe)
- 63Ø Waste Vent Pipe (uPVC Pipe)
- 40Ø Waste Pipe (uPVC Pipe)
- 50Ø Manhole Vent Pipe (uPVC Pipe)
- 110Ø Rain Water Pipes (uPVC Pipe)
- Gully Trap
- 110Ø Rainwater Outlet
- Clean Out Point
- Bottle Trap

Notes: -

-All Drainage Pipes Should Have At A Slope Of 1/150
-All Floor Drains Should Have 'P' Traps

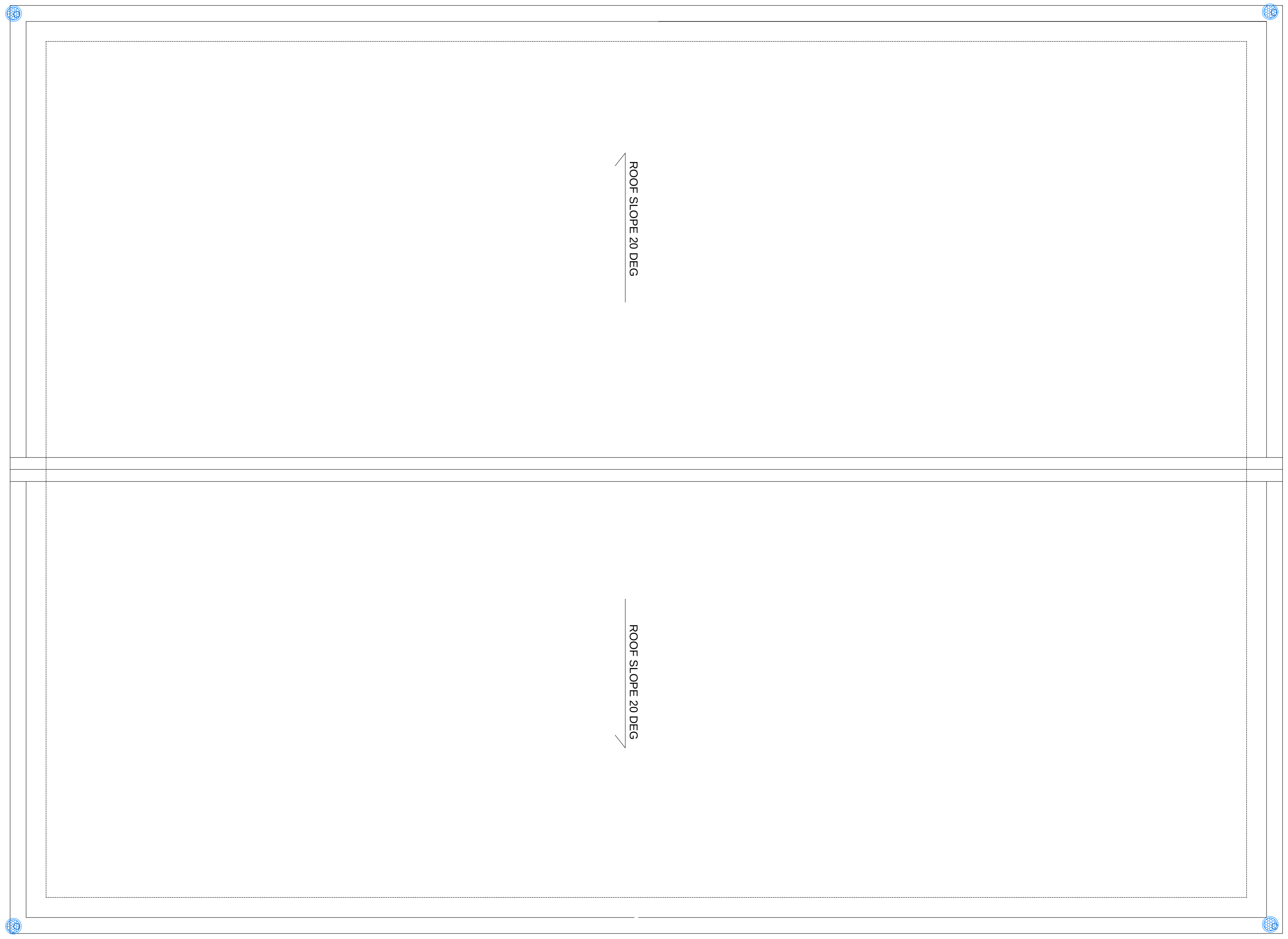

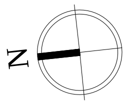

GROUND FLOOR DRAINAGE LAYOUT

1:75

Legend

Note:

-All Drainage Pipes Should Have At A Slope Of 1/150
-All Floor Drains Should Have 'P' Traps

R01	NOV 2020		H.R.	M.R.	M.R.
REV. NO.	Date	Revision Description	Drawn	Chkd	Appd.

Title:
Consultancy Services for Survey, Design and EIA works of Water Supply and Sewerage Facilities
in 6 Islands, Maldives – Package 5
Sub Title:
Water Supply System in V. Keyodhoo

Client:
Ministry of National Planning, Housing and Infrastructure, Republic of Maldives

EPOCH ASSOCIATES
T: +960 333 3528
E: info@epoch.associates
W: wwww.epoch.associates
A: G. Rosary West,
Husnuheenaa Magu, Male', Maldives

FEEDBACK INFRA
Making Infrastructure Happen

Drawn:	H.R.	Checked:	M.R.
Designed:	H.R.	Approved:	M.R.
Date:	Nov 2020	SCALE (A3):	1:75

Project No: EP- WS/2019/05

Rev: R-01

Page: DR-02

Legend

▣ 100W LED Flood Light IP65 @ 6m Light Post

▽ Solar Powered LED Gate Lights (12W)

1|2|3|4 Light Switch (1 Gang - 4 Gang)

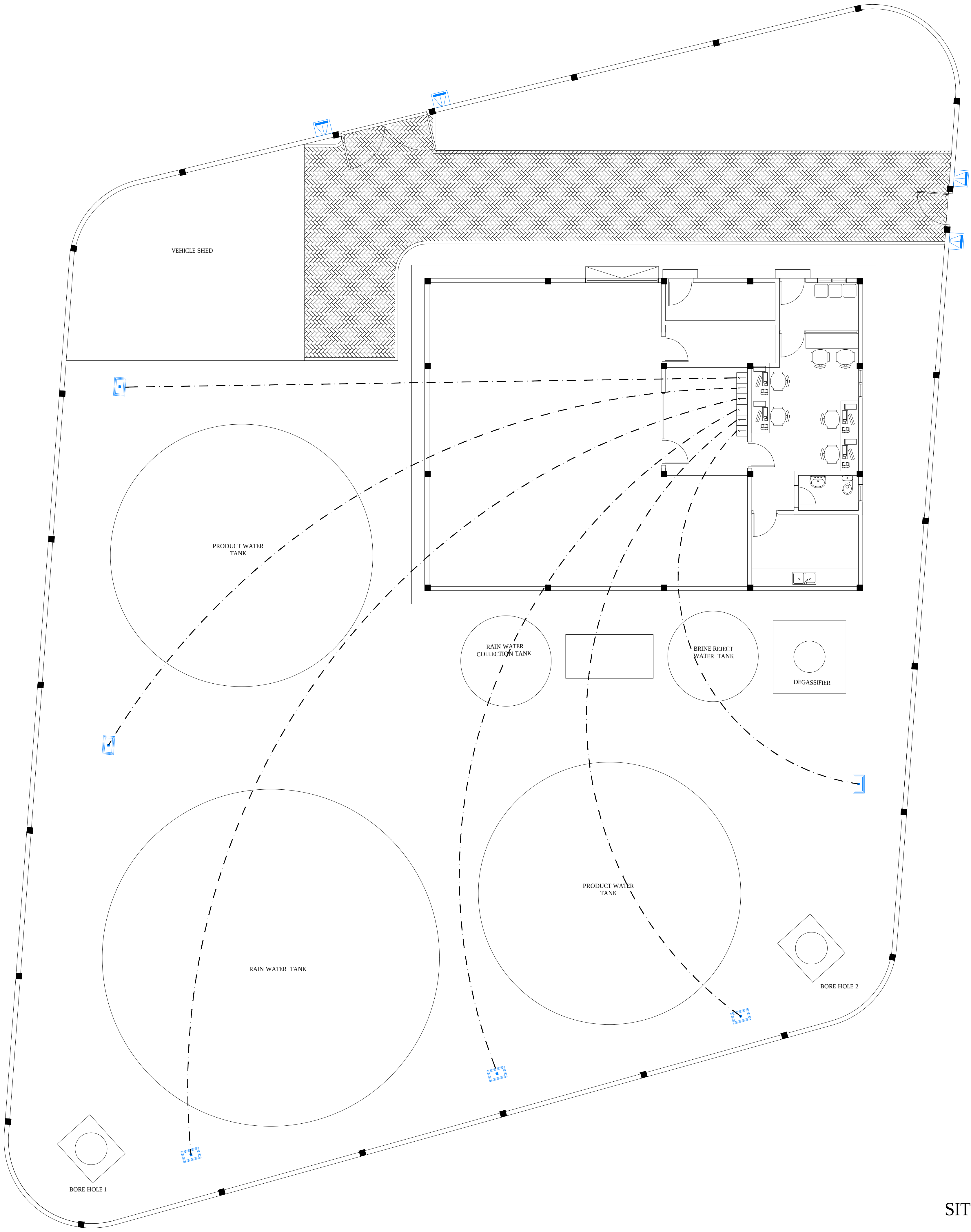
VEHICLE SHED
PRODUCT WATER TANK
RAIN WATER COLLECTION TANK
BRINE REJECT WATER TANK
DEGASSIFIER
RAIN WATER TANK
PRODUCT WATER TANK
BORE HOLE 2
BORE HOLE 1

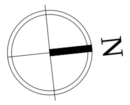

SITE LIGHTING LAYOUT

1:150

Legend

Note:

-All Drainage Pipes Should Have At A Slope Of 1/150
-All Floor Drains Should Have 'P' Traps

R01	NOV 2020		H.R.	M.R.	M.R.
REV. NO.	Date	Revision Description	Drawn	Chkd	Appd.

Title:
Consultancy Services for Survey, Design and EIA works of Water Supply and Sewerage Facilities
in 6 Islands, Maldives – Package 5
Sub Title:
Water Supply System in V. Keyodhoo

Client:
Ministry of National Planning, Housing and Infrastructure, Republic of Maldives

EPOCH ASSOCIATES
T: +960 333 3528
E: info@epoch.associates
W: wwww.epoch.associates
A: G. Rosary West,
Husnuheenaa Magu, Male', Maldives

FEEDBACK INFRA
Making Infrastructure Happen

Drawn: H.R.
Checked: M.R.
Designed: H.R.
Approved: M.R.
Date: Nov 2020
SCALE (A3): 1:75
Project No: EP- WS/2019/05
Rev: R-01
Page: EL-02

Legend

⊡ 16Ø Cold Water Supply To Wall Tap
⋈ Gate Valve
◎ Rise In Wall
M MWSC Meter
→ 25Ø Cold Water Supply Pipes Running Underground
— 20Ø Cold Water Supply Pipes Running Along Wall

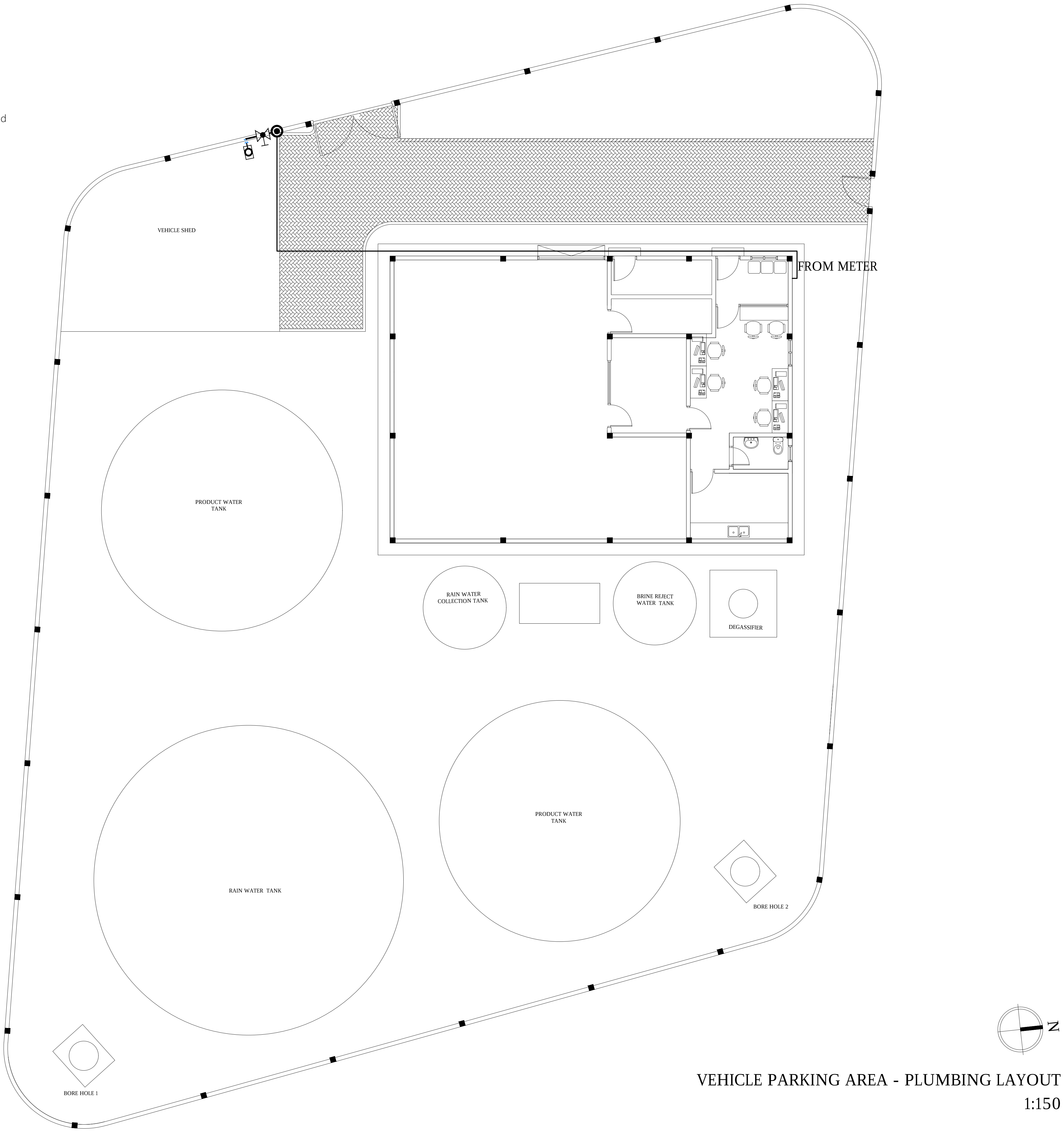
VEHICLE SHED
FROM METER
PRODUCT WATER TANK
RAIN WATER COLLECTION TANK
BRINE REJECT WATER TANK
DEGASSIFIER
RAIN WATER TANK
PRODUCT WATER TANK
BORE HOLE 2
BORE HOLE 1
N

VEHICLE PARKING AREA - PLUMBING LAYOUT

1:150

Legend

Note:

-All Drainage Pipes Should Have At A Slope Of 1/150
-All Floor Drains Should Have 'P' Traps

R01	NOV 2020		H.R.	M.R.	M.R.
REV. NO.	Date	Revision Description	Drawn	Chkd	Appd.

Title:
Consultancy Services for Survey, Design and EIA works of Water Supply and Sewerage Facilities
in 6 Islands, Maldives – Package 5
Sub Title:
Water Supply System in V. Keyodhoo

Client:
Ministry of National Planning, Housing and Infrastructure, Republic of Maldives

EPOCH ASSOCIATES
T: +960 333 3528
E: info@epoch.associates
W: wwww.epoch.associates
A: G. Rosary West,
Husnuheenaa Magu, Male', Maldives

FEEDBACK INFRA
Making Infrastructure Happen

Drawn: H.R. | Checked: M.R.
Designed: H.R. | Approved: M.R.
Date: Nov 2020 | SCALE (A3): 1:75
Project No: EP- WS/2019/05
Rev: R-01 | Page: PL-02

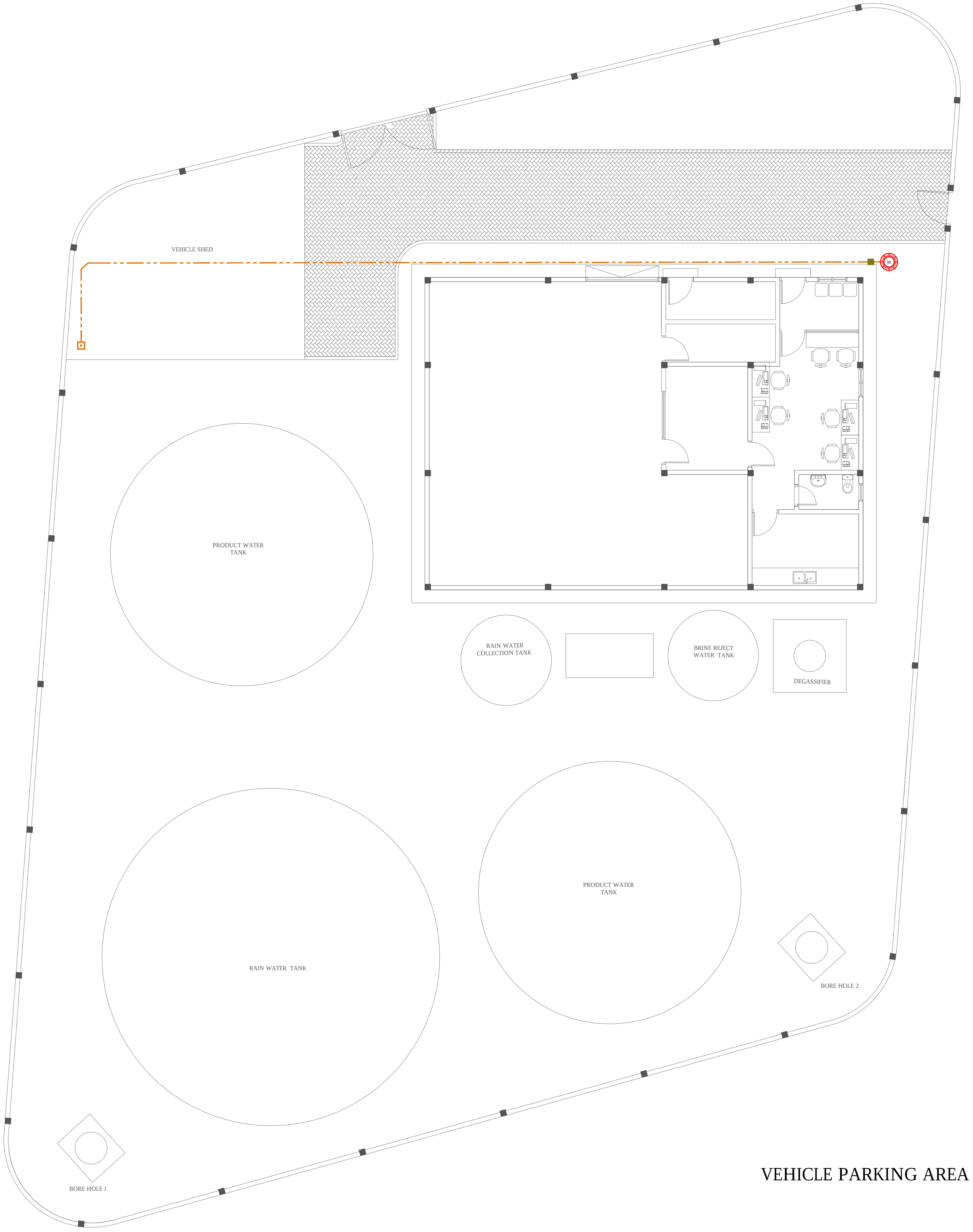
VEHICLE SHED
PRODUCT WATER TANK
RAIN WATER COLLECTION TANK
BRINE REJECT WATER TANK
DEGASSIFIER
RAIN WATER TANK
PRODUCT WATER TANK
BORE HOLE 2
BORE HOLE 1

VEHICLE PARKING AREA - DRAINAGE LAYOUT

1:150

N

Legend

⊡	Floor Drain
○	40Ø Stub For Washing Machine Or Tub
→	82Ø Soil Pipe (uPVC Pipe)
▸	82Ø Soil Vent Pipe (uPVC Pipe)
→	63Ø Waste Pipe (uPVC Pipe)
▸	63Ø Waste Vent Pipe (uPVC Pipe)
-·-→	40Ø Waste Pipe (uPVC Pipe)
→	50Ø Manhole Vent Pipe (uPVC Pipe)
- - -→	110Ø Rain Water Pipes (uPVC Pipe)
■	Gully Trap
◧	Clean Out Point

Note:

-All Drainage Pipes Should Have At A Slope Of 1/150

-All Floor Drains Should Have 'P' Traps

REV. NO.	Date	Revision Description	Drawn	Chkd	Appd.
R01	NOV 2020		H.R.	M.R.	M.R.

Title:
Consultancy Services for
Survey, Design and EIA works of
Water Supply and Sewerage
Facilities
in 6 Islands, Maldives – Package 5
Sub Title:
Water Supply System in V. Keyodhoo

Client:
Ministry of National Planning, Housing and
Infrastructure, Republic of Maldives

EPOCH ASSOCIATES
T: +960 333 3528
E: info@epoch.associates
W: wwww.epoch.associates
A: G. Rosary West,
Husnuheenaa Magu, Male', Maldives

FEEDBACK INFRA
Making Infrastructure Happen

Drawn: H.R.
Checked: M.R.
Designed: H.R.
Approved: M.R.
Date: Nov 2020
SCALE (A3): 1:150
Project No: EP-WS/2019/05
Rev: R-01
Page: DR-03