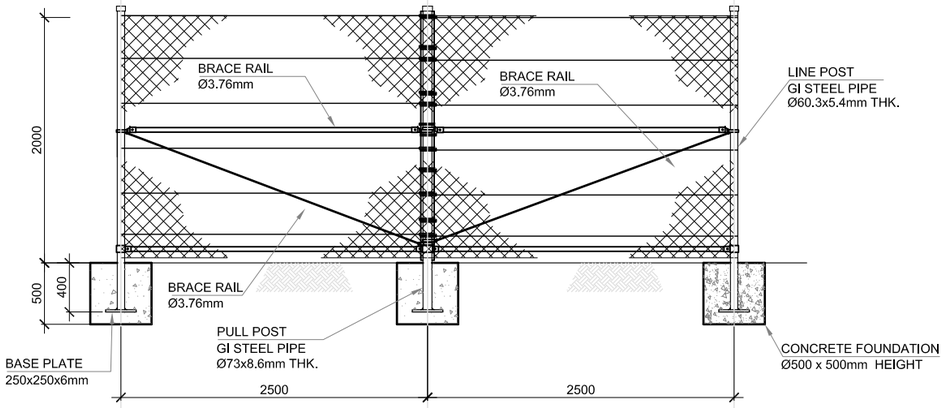

FENCE ELEVATION
SCALE 1: 50

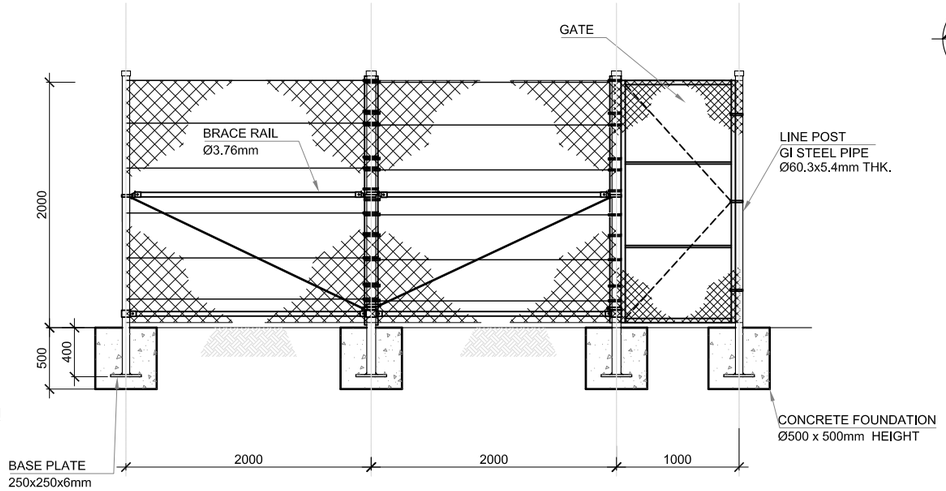

FRONT ELEVATION
SCALE 1: 50

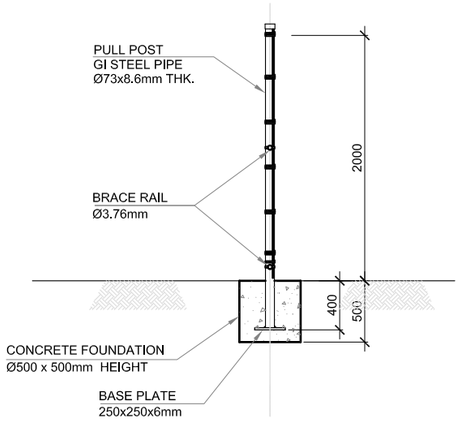

SECTIONAL VIEW
SCALE 1: 50

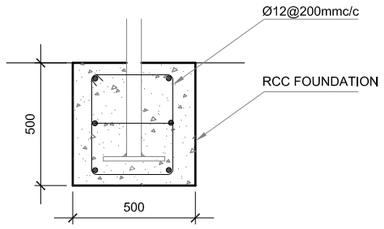

FOUNDATION
SCALE 1: 25

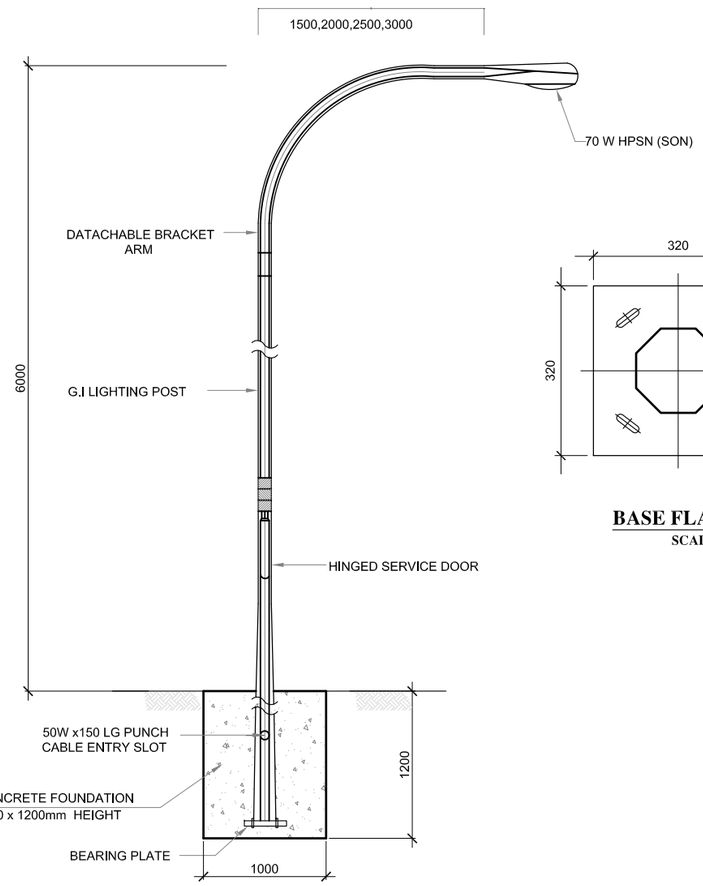

PLANTER TYPE COMPOUND LIGHTING
SCALE 1: 50

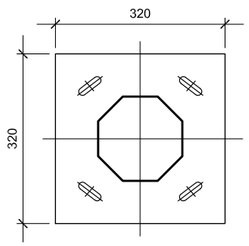

BASE FLANGE
SCALE 1: 25

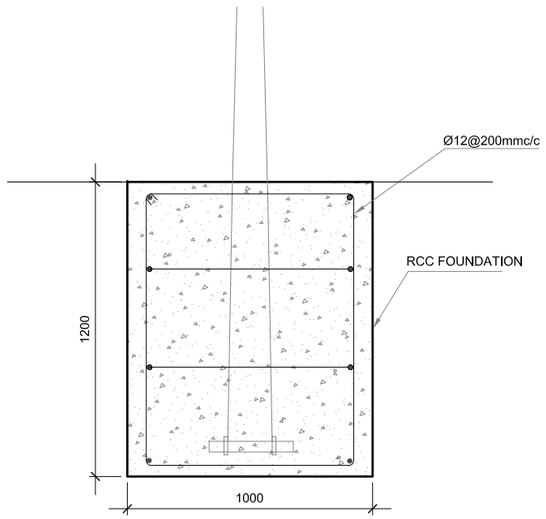

FOUNDATION COMPOUND LIGHT
SCALE 1: 25

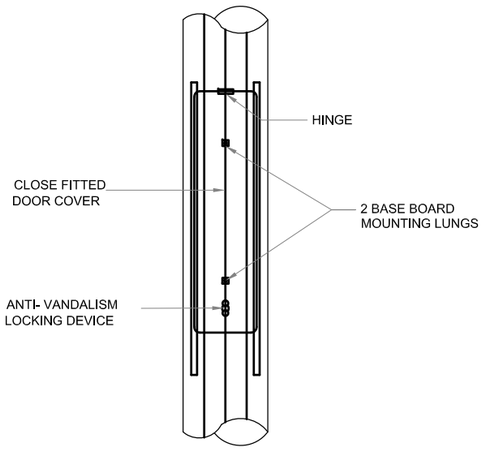

HINGED SERVICE DOOR
SCALE 1: 25

NORTH

NOTES:-

1. ALL DIMENSIONS SHOWN ARE IN MILLIMETERS (MM), UNLESS OTHERWISE SHOWN
2. ALL LEVELS SHOWN ARE IN METERS. ALL LEVELS SHOWN ARE FROM MEAN SEA LEVEL
3. THIS DRAWING TO BE READ IN CONJUNCTION WITH ALL OTHER RELEVANT DRAWINGS,GENERAL NOTES AND SPECIFICATIONS.

REFERENCE DRAWINGS

SL.No.	DRAWING No.	DESCRIPTION

REV.	DATE	DESCRIPTION	DRAWN	CHKD.	APPRD.
..	..	..	..	..	..
..	..	..	.	..	..
..	..	..	..	..	..
..	..	..	..	..	..
0	15-09-'15	DETAILED DESIGN SUBMISSION	JP	SS	MA

REVISION

CLIENT
MINISTRY OF ENVIRONMENT & ENERGY
REPUBLIC OF MALDIVES

CONSULTANT: استشارى

مكتب الحبشى للاستشارات الهندسية
Al-Habshi Consultants Office
Tel.: 2430103 / 2433131 - Fax : 2431136
P.O.Box 27154 Safat 13132 - Kuwait

PROJECT:
Provision of Water Supply Facilities in 04 islands and Sewerage Facilities in 05 islands - R.Hulhudhuffaaru Island - Republic of Maldives

DRAWING TITTLE:
FENCE DETAILS FOR LIFTING STATION

DESIGNED	DRAWN	CHECKED	APPROVED	SCALE	DATE
SK	JP	SS	MA	AS SHOWN	15-09-'15

PROJECT No.	SHEET No.	DRAWING No.
K-619	1 OF 1	RH-SW-124
REV. No.	0	