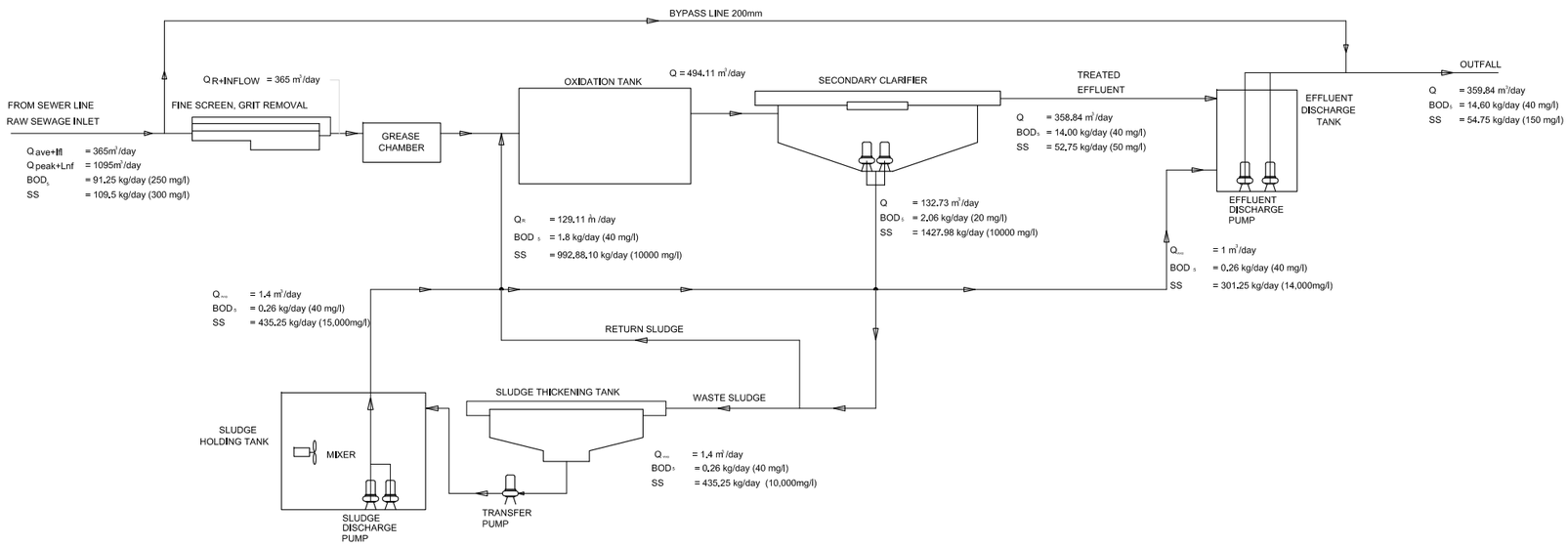

OXIDATION DITCH SYSTEM
SCHEMATIC FLOW DIAGRAM AND MASS BALANCE

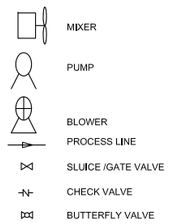

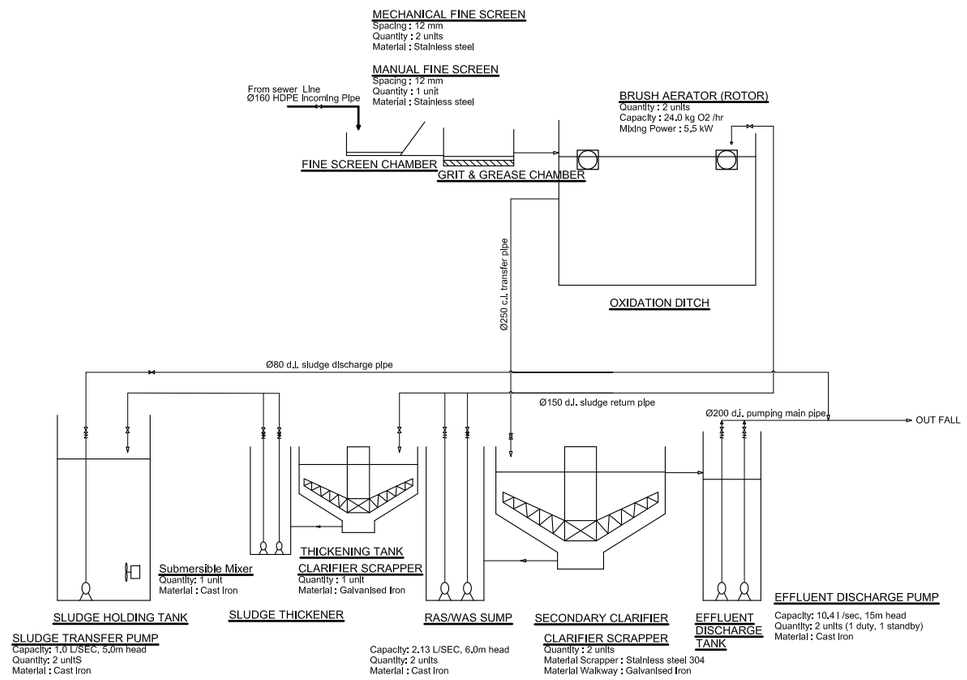

PROCESS & INTRUMENTATION DIAGRAM (P & ID)

NOTES:-

1- ALL DIMENSIONS ARE IN METERS.
2- SITE LEVELS ARE TO BE COORDINATED BY THE CONTRACTOR.
3- PUMPED LINES/ PRESSURE LINES TO USE HDPE PIPES. OTHER FLOW LINES TO USE UPVC PIPES.
4- CONTRACTOR TO PREPARE DETAILED DRAWING AND OBTAIN APPROVAL OF MEEW BEFORE START OF CONSTRUCTION.
5- LAYOUT OF COMPACT UNIT WASTE WATER TREATMENT PLANT FOR R.HULHUDHUFARU ISLAND AVERAGE FLOW Q= 220m³/Day EXPANDABLE UPTO 310m³/Day.
6- SLUDGE STABILIZED, DIGESTED AND DISINFECTED FROM TANK (C) CAN BE PERIODICALLY (ONCE MONTHLY) PUMPED THROUGH EFFLUENT OCEAN DISPOSAL PIPE LINE.
7- IF RAW SEWAGE CAN BE PUMPED DIRECTLY TO SPLITTER BOX FROM LIFTING STATIONS, UNIT (A) (COLLECTION WELL) CAN BE AVOIDED. (AS PER MANUFACTURES SPEC.)
8- ALL SITE LEVELS TO BE COORDINATED BY THE CONTRACTOR AND WRITTEN APPROVED FROM MEEW TO BE OBTAINED BEFORE START OF WORK.
9- ALL DIMENSIONS ARE INDICATIVE, CONTRACTOR MAY PROPOSE CWWIP TO FIT WITHIN THE PLOT BOUNDARY.
10-THE SIZES FOR UNITS A & B ,C & D ARE INDICATIVE ONLY
11-THE PIPE DIMENSIONS REPRESENT IN OUTSIDE DIAMETER(O.D).

LEGEND:-

(A) COLLECTION WELL WITH SCREEN ,GRIT & GREASE REMOVAL FACILITY
(B) COMPACT WASTE WATER TREATMENT UNIT (INCLUDES AERATION AND SETTLING)
(C) SLUDGE TANK
(D) EFFLUENT TANK WITH EFFLUENT DISPOSAL PUMP
(E) SEA OUTFALL
(F) 1.2m PAVEMENT ALL ACROSS THE TREATMENT FACILITY.
(G) 1m HIGH LANDSCAPING (BUSH)
(H) STANDARD MALDIVES PALM TREE.

REFERENCE DRAWINGS

SL.No.	DRAWING No.	DESCRIPTION

REV.	DATE	DESCRIPTION	DRAWN	CHKD.	APPRD.
..	..	..	..	..	..
..	..	..	.	..	..
..	..	..	..	..	..
..	..	..	..	..	..
0	15.09.'15	DETAILED DESIGN SUBMISSION	JP	SS	MA

REVISION

CLIENT
MINISTRY OF ENVIRONMENT & ENERGY
REPUBLIC OF MALDIVES

CONSULTANT: استشاري
مكتب الحبشى للاستشارات الهندسية
Al-Habshi Consultants Office
Tel.: 2430103 / 2433131 - Fax : 2431136
P.O.Box 27154 Safat 13132 - Kuwait

PROJECT:
Provision of Water Supply Facilities in 04 islands and Sewerage Facilities in 05 islands - R.Hulhudhuffaaru Island - Republic of Maldives

DRAWING TITTLE:
PID OF COMPACT SEWERAGE TREATMENT UNIT R-HULHUDHUFARU ISLAND

DESIGNED	DRAWN	CHECKED	APPROVED	SCALE	DATE
SK	JP	SS	MA	N.T.S	15.09.'15

PROJECT No.	SHEET No.	DRAWING No.
K-619	1 OF 1	RH-SW-128
REV. No.	0	