Proposed 8 Classroom at
R. Ungoofaaru School
(02 Storey)

ARCHITECTURAL & STRUCTURAL DRAWINGS
Client: Ministry of Education

TABLE OF CONTENTS

DRAWING No.	TITLE	REVISION No.	DATE	REMARKS
ARCHITECTURAL		---	---	---
A - 01 /20	SITE PLAN	---	---	---
A - 02 /20	GROUND FLOOR PLAN	---	---	---
A - 03 /20	FIRST FLOOR PLAN	---	---	---
A - 04 /20	ROOF PLAN	---	---	---
A - 05 /20	ELEVATION E1	---	---	---
A - 06 /20	ELEVATION E2	---	---	---
A - 07 /20	SECTION X-X	---	---	---
A - 08 /20	SECTION Y-Y	---	---	---
A - 09 /20	DOOR & WINDOW SCHEDULE - 1	---	---	---
A - 10 /20	DOOR & WINDOW SCHEDULE - 2 & VENTILATION SCHEDULE	---	---	---
A - 11 /20	GROUND FLOOR - FLOOR FINISHES PLAN	---	---	---
A - 12 /20	FIRST FLOOR FINISHES PLAN	---	---	---
A - 13 /20	GROUND FLOOR - REFLECTED CEILING PLAN	---	---	---
A - 14 /20	FIRST FLOOR - REFLECTED CEILING PLAN	---	---	---
A - 15 /20	DETAIL - 1:STAIRCASE DETAILS	---	---	---
A - 16 /20	DETAIL - 2:MAIN ENTRANCE RAMP DETAILS	---	---	---
A - 17 /20	DETAIL - 3:TOILET DETAILS	---	---	---
A - 18 /20	DETAIL - 4:RC FIN DETAILS	---	---	---
A - 19 /20	DETAIL - 5:RAILING DETAILS	---	---	---
A - 20 /20	DETAIL - 6:RC WALL DETAILS	---	---	---
		---	---	---
		---	---	---
STRUCTURAL		---	---	---
E - 00 /12	GENERAL NOTES	---	---	---
E - 01 /12	FOUNDATION PLAN	---	---	---
E - 02 /12	FIRST - SECOND FLOOR COLUMN LAYOUT PLAN	---	---	---
E - 03 /12	FIRST - SECOND FLOOR BEAM PLAN	---	---	---
E - 04 /12	STORE / HALF LANDING FLOOR BEAM & SLAB REIN. PLAN	---	---	---
E - 05 /12	FIRST - SECOND FLOOR SLAB REINFORCEMENT PLAN	---	---	---
E - 06 /12	ROOF BEAM PLAN - 1 (+9150)	---	---	---
E - 07 /12	ROOF BEAM PLAN - 2 (+9706)	---	---	---
E - 08 /12	ROOF TRUSS AND FRAMING PLAN	---	---	---
E - 09 /12	ROOF TRUSS DETAILS	---	---	---
E - 10 /12	STRUCTURAL DETAILS - 1	---	---	---
E - 11 /12	STRUCTURAL DETAILS - 2	---	---	---
E - 12 /12	STRUCTURAL DETAILS - 3	---	---	---

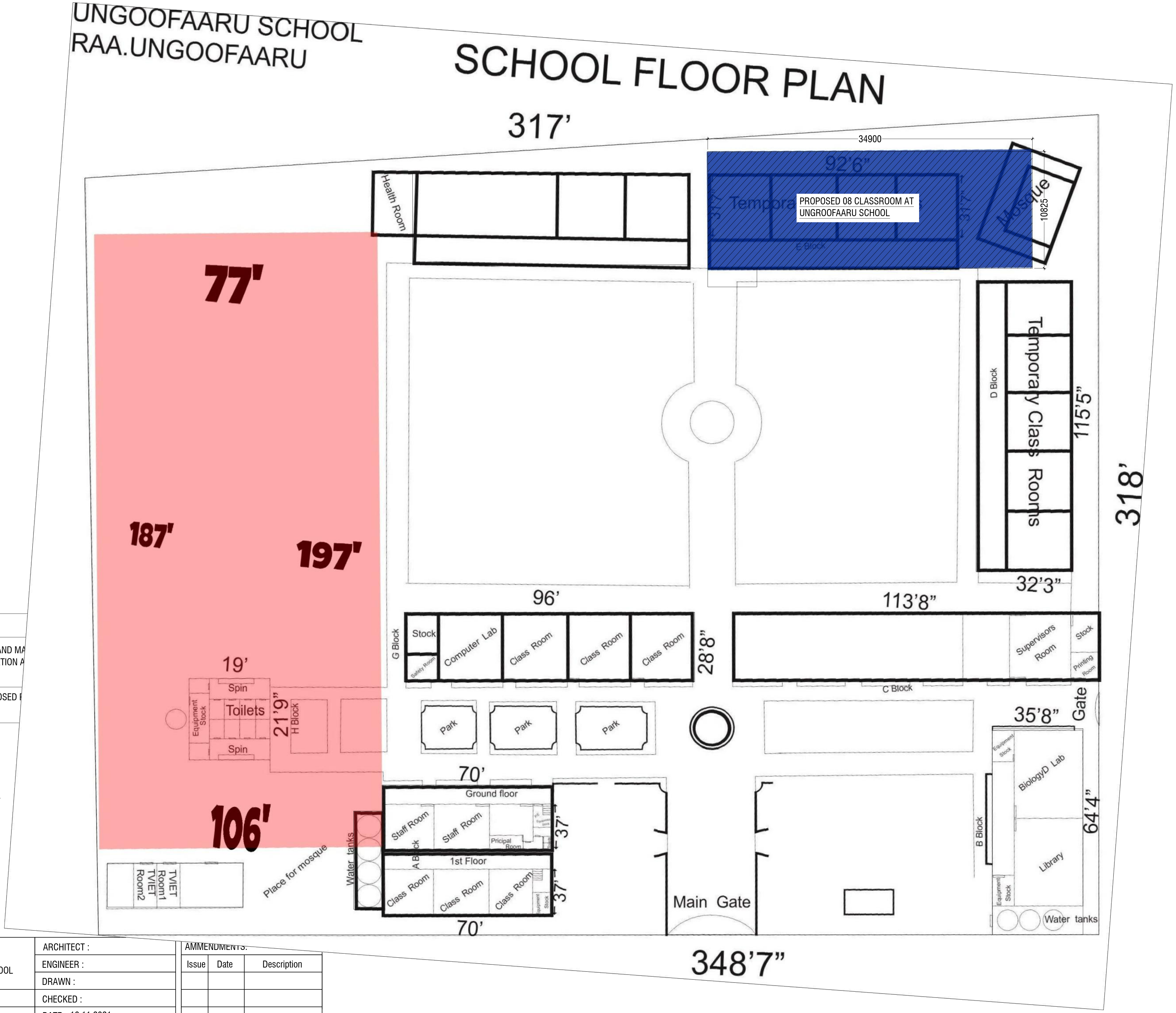
UNGOOFAARU SCHOOL
RAA.UNGOOFAARU
SCHOOL FLOOR PLAN
317'
34900
92'6"
31'7"
Temporar
PROPOSED 08 CLASSROOM AT
UNGROOFAARU SCHOOL
31'7"
E Block
Mosque
10825
Health Room
77'
187'
197'
106'
D Block
Temporary Class Rooms
115'5"
318'
32'3"
96'
113'8"
G Block
Stock
Safety Room
Computer Lab
Class Room
Class Room
Class Room
28'8"
Supervisors Room
Stock
Printing Room
C Block
19'
Spin
Equipment Stock
Toilets
21'9"
H Block
Spin
Park
Park
Park
35'8"
Gate
Equipment Stock
BiologyD Lab
64'4"
B Block
Library
Equipment Stock
Water tanks
70'
Ground floor
Staff Room
Staff Room
Pricipal Room
Equipment Stock
37'
A Block
1st Floor
Class Room
Class Room
Class Room
Equipment Stock
37'
70'
Water tanks
Place for mosque
TVIET Room1
TVIET Room2
Main Gate
348'7"

NOTE:

▨ PROPOSED BUILDING LOCATION

ANY INFRASTRUCTURES (BOTH NATURAL AND MA
DEMOLISHED AT THE PROPOSED SITE LOCATION A
STATED BY THE SCHOOL

AVAILABLE MEASUREMENT FOR THE PROPOSED F
SHOWN.

SITE PLAN

NTS

N

PHYSICAL FACILITIES DEVELOPMENT SECTION
MINISTRY OF EDUCATION,
REPUBLIC OF MALDIVES

PROJECT:
08 CLASSROOM AT
R.UNGOOFAARU SCHOOL

PROJECT REFERENCE

CLIENT: MINISTRY OF EDUCATION

SCALE : AS GIVEN

ARCHITECT :

ENGINEER :

DRAWN :

CHECKED :

DATE : 16.11.2021

DWG NO : A 01/ 20

AMMENDMENTS:

Issue	Date	Description

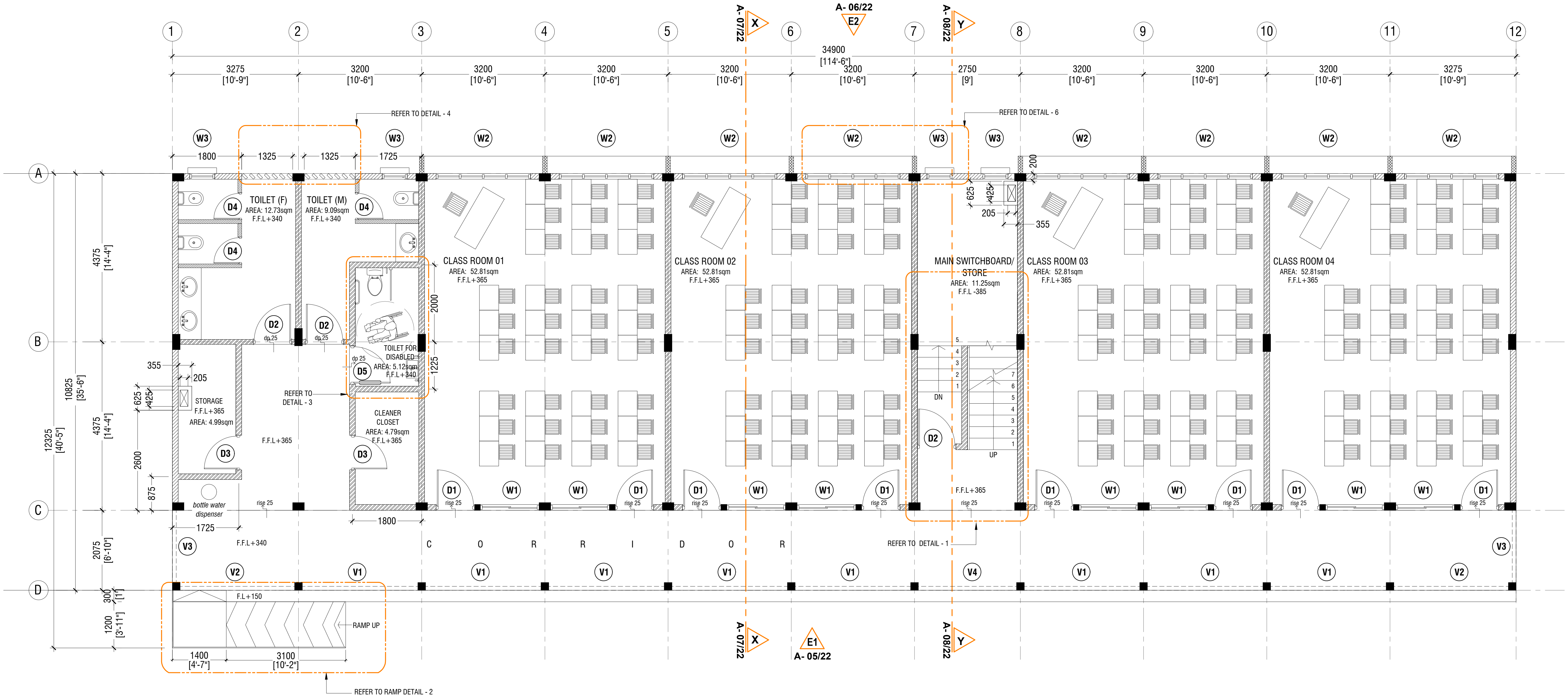
A- 07/22
X
A- 06/22
E2
A- 08/22
Y
1
2
3
4
5
6
7
8
9
10
11
12
34900
[114'-6"]
3275
[10'-9"]
3200
[10'-6"]
2750
[9']
REFER TO DETAIL - 4
REFER TO DETAIL - 6
W1
W2
W3
1800
1325
1725
200
A
B
C
D
TOILET (F)
AREA: 12.73sqm
F.F.L+340
TOILET (M)
AREA: 9.09sqm
F.F.L+340
D1
D2
D3
D4
D5
2000
1225
TOILET FOR DISABLED
AREA: 5.12sqm
F.F.L+340
CLASS ROOM 01
AREA: 52.81sqm
F.F.L+365
CLASS ROOM 02
AREA: 52.81sqm
F.F.L+365
MAIN SWITCHBOARD/ STORE
AREA: 11.25sqm
F.F.L -385
CLASS ROOM 03
AREA: 52.81sqm
F.F.L+365
CLASS ROOM 04
AREA: 52.81sqm
F.F.L+365
625
425
205
355
STORAGE
F.F.L+365
AREA: 4.99sqm
REFER TO DETAIL - 3
F.F.L+365
CLEANER CLOSET
AREA: 4.79sqm
F.F.L+365
DN
UP
F.F.L+365
dp 25
rise 25
bottle water dispenser
4375
[14'-4"]
10825
[35'-6"]
12325
[40'-5"]
2600
875
2075
[6'-10"]
300
[1']
1200
[3'-11"]
F.F.L+340
C O R R I D O R
REFER TO DETAIL - 1
V1
V2
V3
V4
F.L+150
RAMP UP
1400
[4'-7"]
3100
[10'-2"]
E1
A- 05/22
REFER TO RAMP DETAIL - 2

GROUND FLOOR PLAN

SCALE 1:100

0 0.5 1 2 3 4 5

NOTE:

▨ PROPOSED 150mm THICK SOLID BLOCK - INTERIOR MASONRY WALL WITH 16mm PLASTERING, GROUND SMOOTH IN SELECTED PAINT FINISH

▨ PROPOSED 150mm THICK SOLID BLOCK - EXTERIOR MASONRY WALL WITH 20mm PLASTERING, GROUND SMOOTH IN SELECTED PAINT FINISH

PROPOSED 100mm THICK SOLID BLOCK - INTERIOR MASONRY WALL WITH 16mm PLASTERING, GROUND SMOOTH IN SELECTED PAINT FINISH

▨ PROPOSED 120mm THICK RC WALL TO BE WATER PROOFED WITH WATER PROOFING AGENT

▨ PROPOSED 100mm THICK 2400mm HIGH SOLID BLOCK MASONRY WALL WITH 16mm PLASTERING, GROUND SMOOTH IN SELECTED PAINT FINISH

THE SCREEDING AND TILES ARE INCORPORATED IN THE FLOOR FINISH LEVELS

REFER TO ARCHITECT FOR FURTHER ASSISTANCE.

PHYSICAL FACILITIES DEVELOPMENT SECTION MINISTRY OF EDUCATION, REPUBLIC OF MALDIVES	PROJECT: 08 CLASSROOM AT R.UNGOOFAARU SCHOOL	ARCHITECT : ENGINEER : DRAWN :
	PROJECT REFERENCE	CHECKED :
	CLIENT: MINISTRY OF EDUCATION	DATE : 16.11.2021
	SCALE : AS GIVEN	DWG NO : A 02/ 20

AMMENDMENTS.

Issue	Date	Description

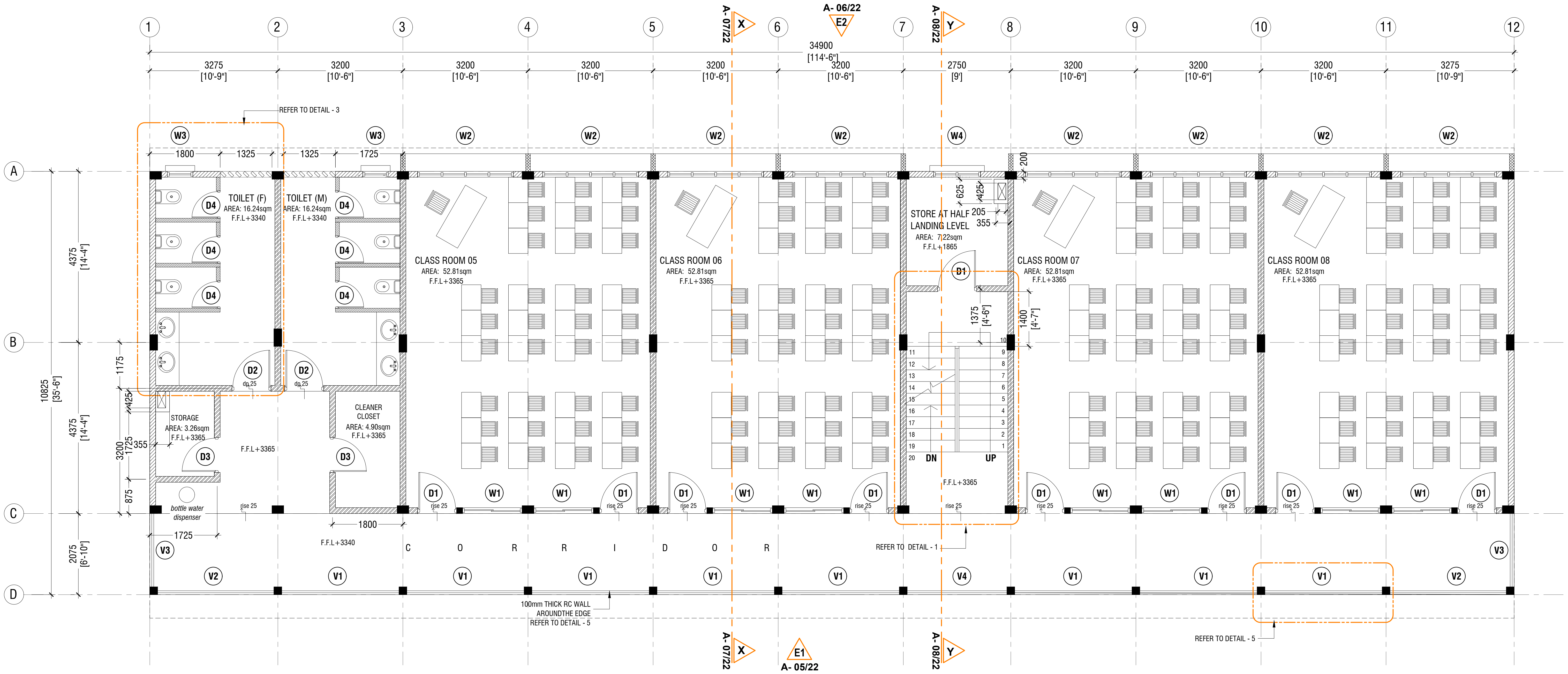
1
2
3
4
5
6
7
8
9
10
11
12
A
B
C
D
A- 07/22
X
A- 06/22
E2
A- 08/22
Y
E1
A- 05/22
34900
[114'-6"]
3275
[10'-9"]
3200
[10'-6"]
2750
[9']
10825
[35'-6"]
4375
[14'-4"]
2075
[6'-10"]
REFER TO DETAIL - 3
W1
W2
W3
W4
D1
D2
D3
D4
V1
V2
V3
V4
1800
1325
1725
TOILET (F)
AREA: 16.24sqm
F.F.L+3340
TOILET (M)
AREA: 16.24sqm
F.F.L+3340
CLASS ROOM 05
AREA: 52.81sqm
F.F.L+3365
CLASS ROOM 06
AREA: 52.81sqm
F.F.L+3365
CLASS ROOM 07
AREA: 52.81sqm
F.F.L+3365
CLASS ROOM 08
AREA: 52.81sqm
F.F.L+3365
STORE AT HALF
LANDING LEVEL
AREA: 7.22sqm
F.F.L+1865
625
425
205
355
200
1375
[4'-6"]
1400
[4'-7"]
DN
UP
F.F.L+3365
STORAGE
AREA: 3.26sqm
F.F.L+3365
CLEANER
CLOSET
AREA: 4.90sqm
F.F.L+3365
1175
3200
875
bottle water
dispenser
rise 25
dn 25
F.F.L+3340
C O R R I D O R
REFER TO DETAIL - 1
100mm THICK RC WALL
AROUNDTHE EDGE
REFER TO DETAIL - 5
REFER TO DETAIL - 5

FIRST FLOOR PLAN

SCALE 1:100

0 0.5 1 2 3 4 5

NOTE:

▨ PROPOSED 150mm THICK SOLID BLOCK - INTERIOR MASONRY WALL WITH 16mm PLASTERING, GROUND SMOOTH IN SELECTED PAINT FINISH

▨ PROPOSED 150mm THICK SOLID BLOCK - EXTERIOR MASONRY WALL WITH 20mm PLASTERING, GROUND SMOOTH IN SELECTED PAINT FINISH

PROPOSED 100mm THICK SOLID BLOCK - INTERIOR MASONRY WALL WITH 16mm PLASTERING, GROUND SMOOTH IN SELECTED PAINT FINISH

▩ PROPOSED 120mm THICK RC WALL TO BE WATER PROOFED WITH WATER PROOFING AGENT

▨ PROPOSED 100mm THICK 2400mm HIGH SOLID BLOCK MASONRY WALL WITH 16mm PLASTERING, GROUND SMOOTH IN SELECTED PAINT FINISH

THE SCREEDING AND TILES ARE INCORPORATED IN THE FLOOR FINISH LEVELS

REFER TO ARCHITECT FOR FURTHER ASSISTANCE.

PHYSICAL FACILITIES DEVELOPMENT SECTION MINISTRY OF EDUCATION, REPUBLIC OF MALDIVES	PROJECT: 08 CLASSROOM AT R.UNGOOFAARU SCHOOL	ARCHITECT :
		ENGINEER :
		DRAWN :
	PROJECT REFERENCE	CHECKED :
	CLIENT: MINISTRY OF EDUCATION	DATE : 16.11.2021
	SCALE : AS GIVEN	DWG NO : A 03/ 20

AMMENDMENTS.

Issue	Date	Description

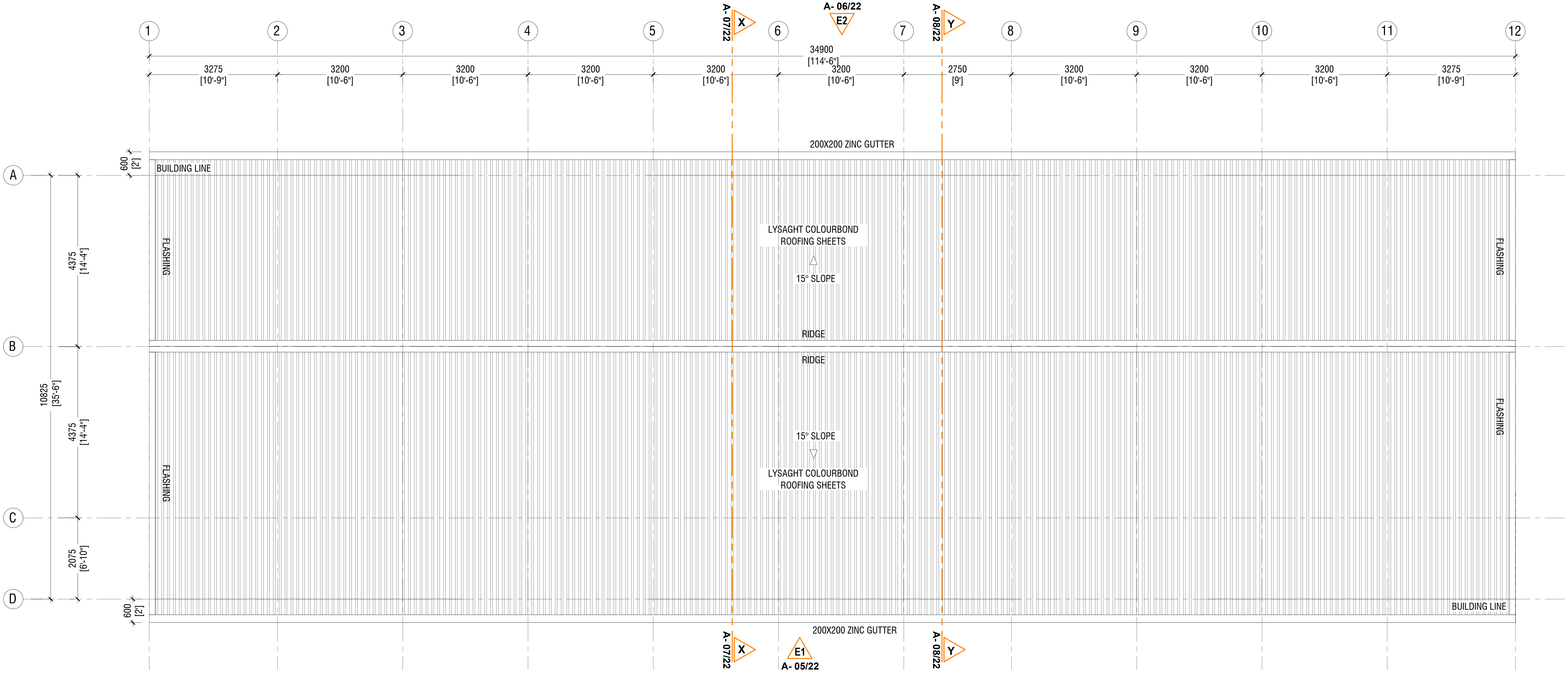
1
2
3
4
5
6
7
8
9
10
11
12
A
B
C
D
A- 07/22
X
A- 06/22
E2
A- 08/22
Y
34900
[114'-6"]
3275
[10'-9"]
3200
[10'-6"]
3200
[10'-6"]
3200
[10'-6"]
3200
[10'-6"]
3200
[10'-6"]
2750
[9']
3200
[10'-6"]
3200
[10'-6"]
3200
[10'-6"]
3275
[10'-9"]
200X200 ZINC GUTTER
600
[2']
BUILDING LINE
FLASHING
LYSAGHT COLOURBOND
ROOFING SHEETS
15° SLOPE
RIDGE
RIDGE
15° SLOPE
LYSAGHT COLOURBOND
ROOFING SHEETS
FLASHING
FLASHING
FLASHING
4375
[14'-4"]
10825
[35'-6"]
4375
[14'-4"]
2075
[6'-10"]
600
[2']
BUILDING LINE
200X200 ZINC GUTTER
A- 07/22
X
E1
A- 05/22
A- 08/22
Y

ROOF PLAN

SCALE 1:100

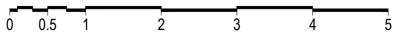

NOTE:

ROOF MATERIAL: LYSAGHT COLOURBOND ROOFING SHEETS
ROOF SLOPE : 15°
ROOF OVERHANG: 600mm

PHYSICAL FACILITIES DEVELOPMENT SECTION
MINISTRY OF EDUCATION,
REPUBLIC OF MALDIVES

PROJECT:
08 CLASSROOM AT
R.UNGOOFAARU SCHOOL

PROJECT REFERENCE

CLIENT: MINISTRY OF EDUCATION

SCALE : AS GIVEN

ARCHITECT :
ENGINEER :
DRAWN :
CHECKED :
DATE : 16.11.2021
DWG NO : A 04/ 20

AMMENDMENTS.

Issue	Date	Description

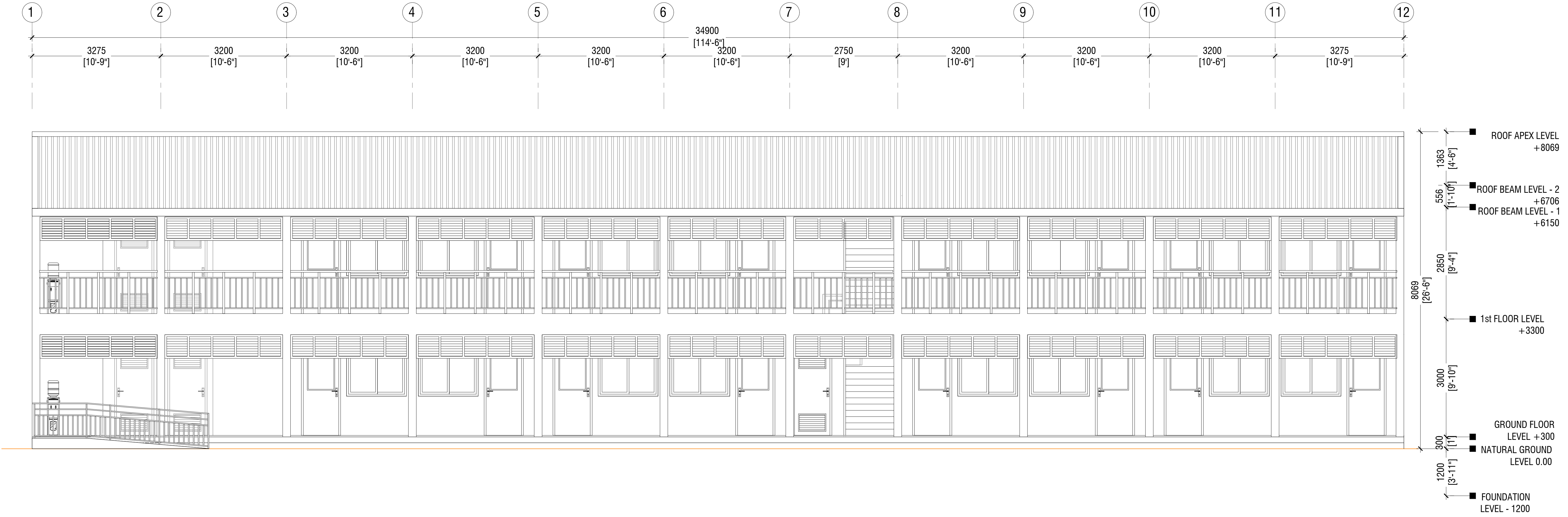
1
2
3
4
5
6
7
8
9
10
11
12
34900
[114'-6"]
3275
[10'-9"]
3200
[10'-6"]
3200
[10'-6"]
3200
[10'-6"]
3200
[10'-6"]
3200
[10'-6"]
2750
[9']
3200
[10'-6"]
3200
[10'-6"]
3200
[10'-6"]
3275
[10'-9"]
ROOF APEX LEVEL
+8069
ROOF BEAM LEVEL - 2
+6706
ROOF BEAM LEVEL - 1
+6150
1st FLOOR LEVEL
+3300
GROUND FLOOR
LEVEL +300
NATURAL GROUND
LEVEL 0.00
FOUNDATION
LEVEL - 1200
1363
[4'-6"]
556
[1'-10"]
2850
[9'-4"]
8069
[26'-6"]
3000
[9'-10"]
300
[1']
1200
[3'-11"]

ELEVATION E1

SCALE 1:100

0
0.5
1
2
3
4
5

PHYSICAL FACILITIES DEVELOPMENT SECTION MINISTRY OF EDUCATION, REPUBLIC OF MALDIVES	PROJECT: 08 CLASSROOM AT R.UNGOOFAARU SCHOOL	ARCHITECT : ENGINEER : DRAWN :
	PROJECT REFERENCE	CHECKED :
	CLIENT: MINISTRY OF EDUCATION	DATE : 16.11.2021
	SCALE : AS GIVEN	DWG NO : A 05/ 20

AMMENDMENTS.

Issue	Date	Description

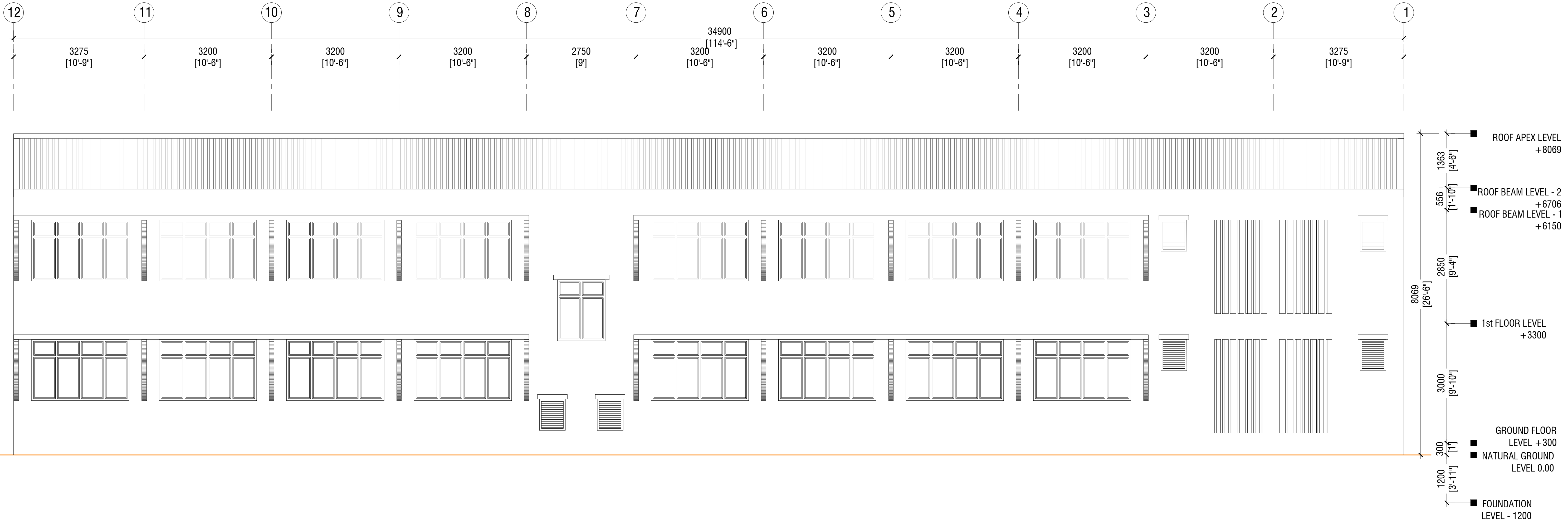
12
11
10
9
8
7
6
5
4
3
2
1
34900
[114'-6"]
3275
[10'-9"]
3200
[10'-6"]
3200
[10'-6"]
3200
[10'-6"]
2750
[9']
3200
[10'-6"]
3200
[10'-6"]
3200
[10'-6"]
3200
[10'-6"]
3200
[10'-6"]
3275
[10'-9"]
ROOF APEX LEVEL
+8069
ROOF BEAM LEVEL - 2
+6706
ROOF BEAM LEVEL - 1
+6150
1st FLOOR LEVEL
+3300
GROUND FLOOR
LEVEL +300
NATURAL GROUND
LEVEL 0.00
FOUNDATION
LEVEL - 1200
1363
[4'-6"]
556
[1'-10"]
2850
[9'-4"]
3000
[9'-10"]
300
[1']
1200
[3'-11"]
8069
[26'-6"]

ELEVATION E2

SCALE 1:100

0 0.5 1 2 3 4 5

PHYSICAL FACILITIES DEVELOPMENT SECTION MINISTRY OF EDUCATION, REPUBLIC OF MALDIVES	PROJECT: 08 CLASSROOM AT R.UNGOOFAARU SCHOOL	ARCHITECT : ENGINEER : DRAWN :
	PROJECT REFERENCE	CHECKED :
	CLIENT: MINISTRY OF EDUCATION	DATE : 16.11.2021
	SCALE : AS GIVEN	DWG NO : A 06/ 20

AMMENDMENTS.		
Issue	Date	Description

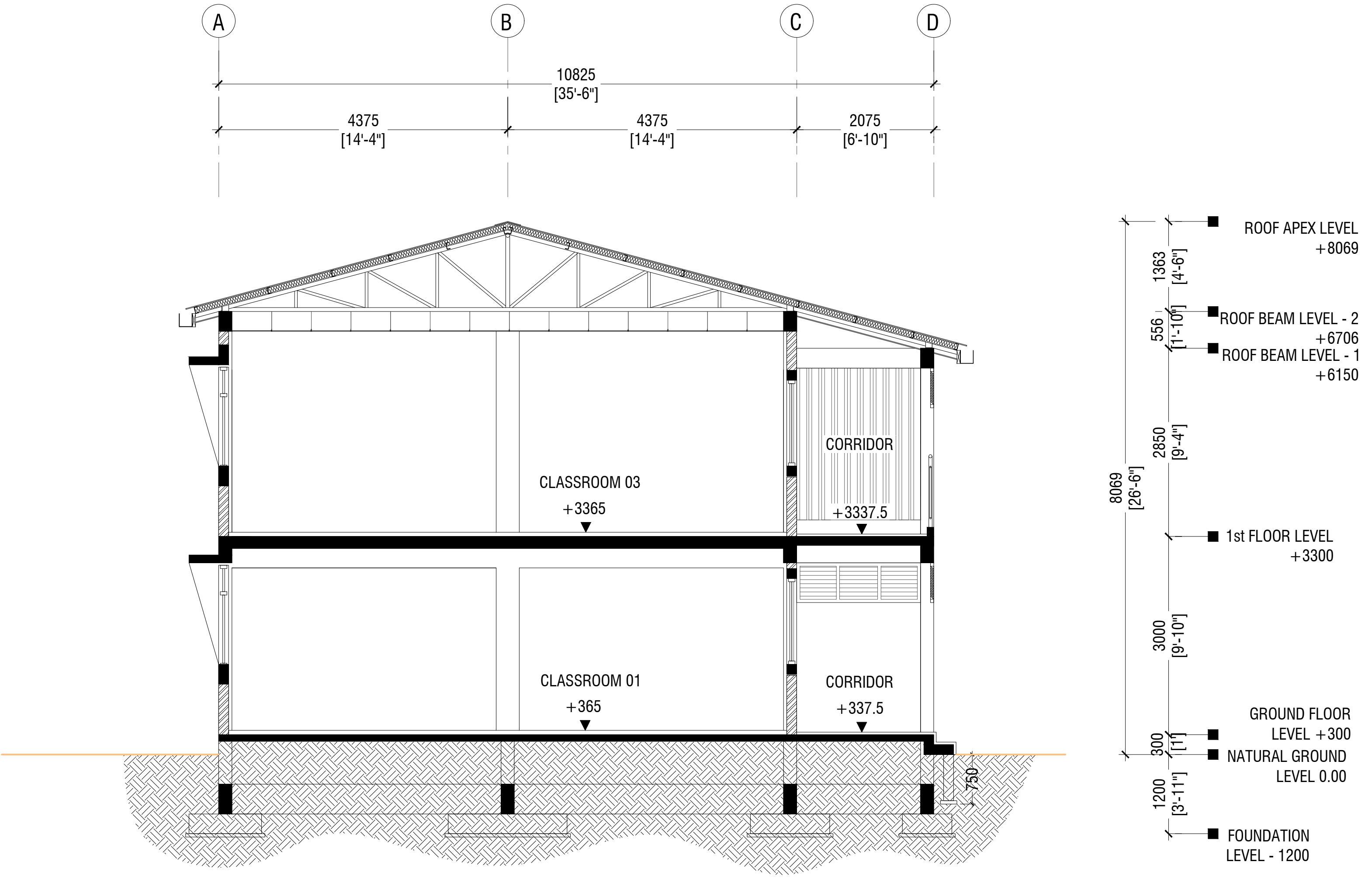
A
B
C
D
10825
[35'-6"]
4375
[14'-4"]
4375
[14'-4"]
2075
[6'-10"]
CORRIDOR
+3337.5
CLASSROOM 03
+3365
CLASSROOM 01
+365
CORRIDOR
+337.5
750
1363
[4'-6"]
556
[1'-10"]
2850
[9'-4"]
8069
[26'-6"]
3000
[9'-10"]
300
[1']
1200
[3'-11"]
ROOF APEX LEVEL
+8069
ROOF BEAM LEVEL - 2
+6706
ROOF BEAM LEVEL - 1
+6150
1st FLOOR LEVEL
+3300
GROUND FLOOR
LEVEL +300
NATURAL GROUND
LEVEL 0.00
FOUNDATION
LEVEL - 1200

SECTION X-X

SCALE 1:100

0 0.5 1 2 3 4 5

PHYSICAL FACILITIES DEVELOPMENT SECTION MINISTRY OF EDUCATION, REPUBLIC OF MALDIVES	PROJECT: 08 CLASSROOM AT R.UNGOOFAARU SCHOOL	ARCHITECT : ENGINEER : DRAWN :
	PROJECT REFERENCE	CHECKED :
	CLIENT: MINISTRY OF EDUCATION	DATE : 16.11.2021
	SCALE : AS GIVEN	DWG NO : A 07/ 20

AMMENDMENTS.

Issue	Date	Description

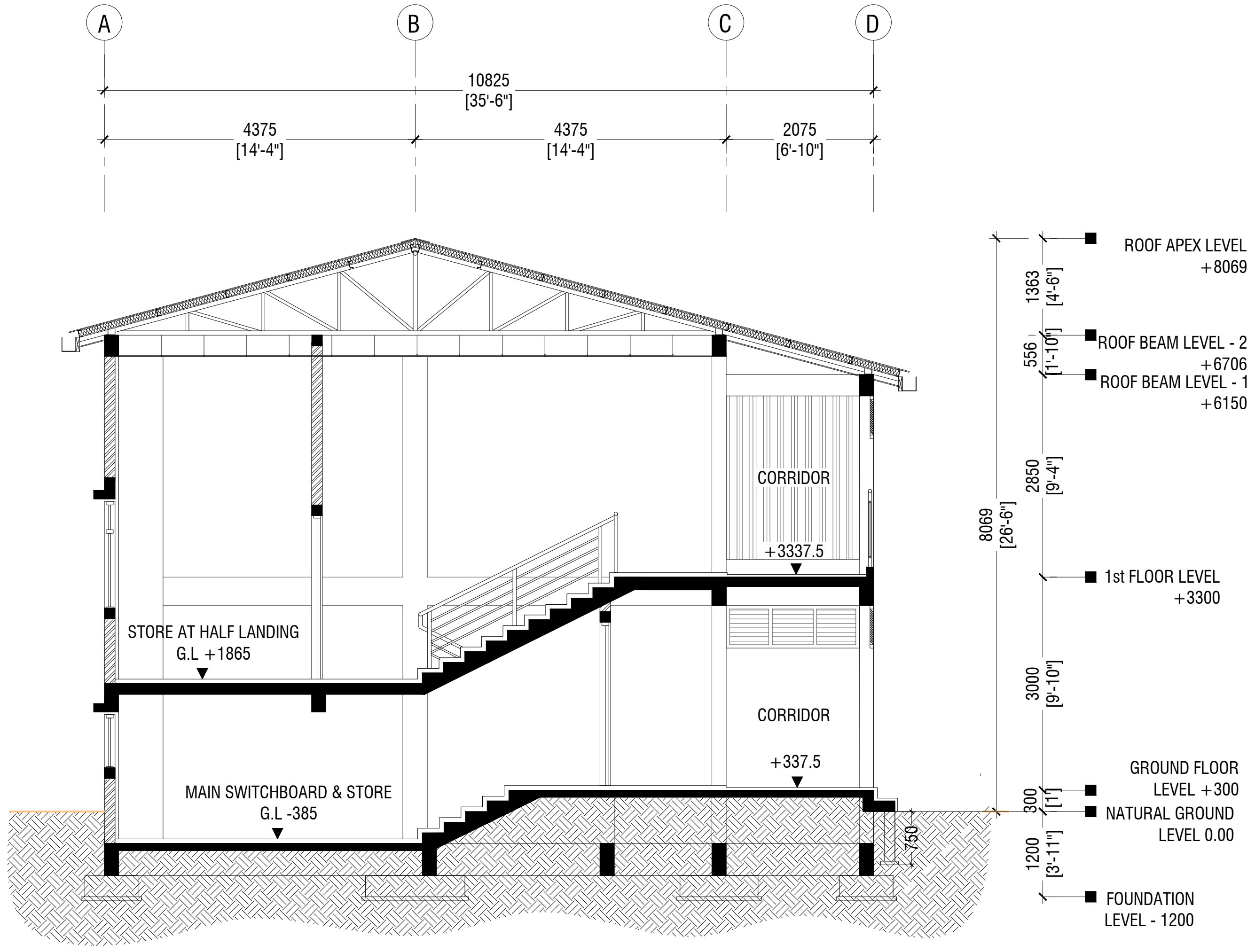
A
B
C
D
10825
[35'-6"]
4375
[14'-4"]
4375
[14'-4"]
2075
[6'-10"]
ROOF APEX LEVEL
+8069
1363
[4'-6"]
556
[1'-10"]
ROOF BEAM LEVEL - 2
+6706
ROOF BEAM LEVEL - 1
+6150
2850
[9'-4"]
8069
[26'-6"]
CORRIDOR
+3337.5
1st FLOOR LEVEL
+3300
STORE AT HALF LANDING
G.L +1865
3000
[9'-10"]
CORRIDOR
+337.5
MAIN SWITCHBOARD & STORE
G.L -385
GROUND FLOOR
LEVEL +300
300
[1']
NATURAL GROUND
LEVEL 0.00
750
1200
[3'-11"]
FOUNDATION
LEVEL - 1200

SECTION Y-Y

SCALE 1:100

0 0.5 1 2 3 4 5

PHYSICAL FACILITIES DEVELOPMENT SECTION MINISTRY OF EDUCATION, REPUBLIC OF MALDIVES	PROJECT: 08 CLASSROOM AT R.UNGOOFAARU SCHOOL	ARCHITECT : ENGINEER : DRAWN :
	PROJECT REFERENCE	CHECKED :
	CLIENT: MINISTRY OF EDUCATION	DATE : 16.11.2021
	SCALE : AS GIVEN	DWG NO : A 08/ 20

AMMENDMENTS.

Issue	Date	Description

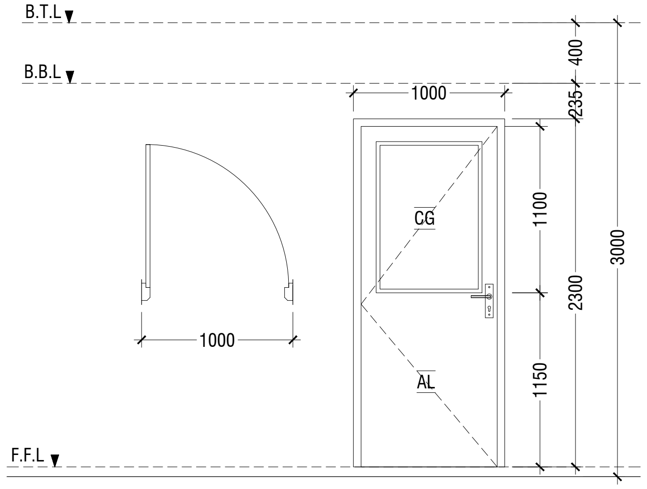
B.T.L
B.B.L
F.F.L
1000
1000
400
235
1100
2300
3000
1150
CG
AL

D1	SWING DOOR
REMARKS	50mm THICK WHITE POWDER COATED (60 MICRONS) ALUMINUM FRAMED WITH ALUMINIUM PANEL AND 6mm THICK CLEAR GLASS
LOCATION	CLASSROOMS & HALF LANDING STORE ROOM
QUANTITY	17 NOS
OPEN AREA	2.03 sqm

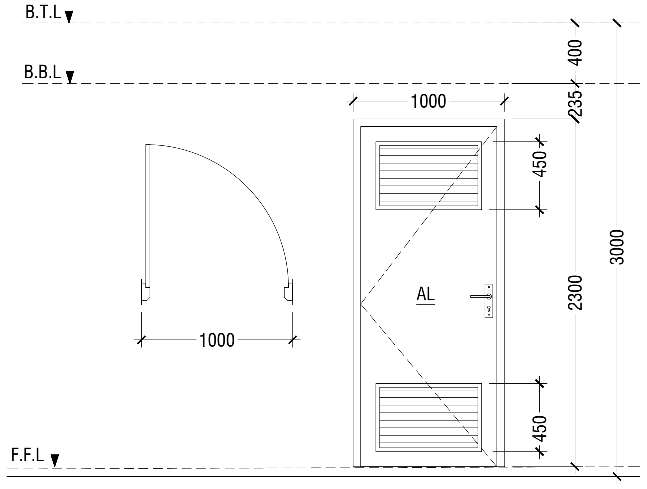
B.T.L
B.B.L
F.F.L
1000
1000
400
235
450
2300
3000
450
AL

D2	SWING DOOR WITH ALUMINIUM LOUVERS
REMARKS	50mm THICK WHITE POWDER COATED (60 MICRONS) ALUMINUM FRAMED WITH ALUMINIUM PANEL AND ALUMINUM LOUVERS
LOCATION	TOILETS & MAIN SWITCH BOARD STORE
QUANTITY	05 NOS
OPEN AREA	2.03 sqm

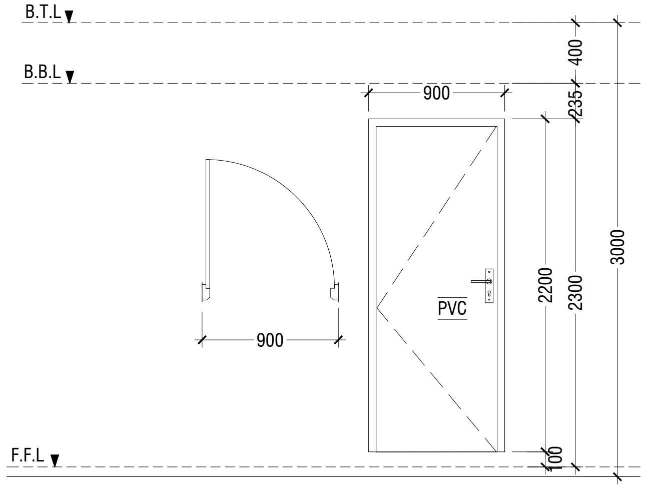
B.T.L
B.B.L
F.F.L
900
900
400
235
2200
2300
3000
100
PVC

D3	PVC SWING DOOR
REMARKS	PVC WHITE FRAME AND PANEL
LOCATION	STORE & CLEANER CLOSET
QUANTITY	04 NOS
OPEN AREA	1.72 SQM

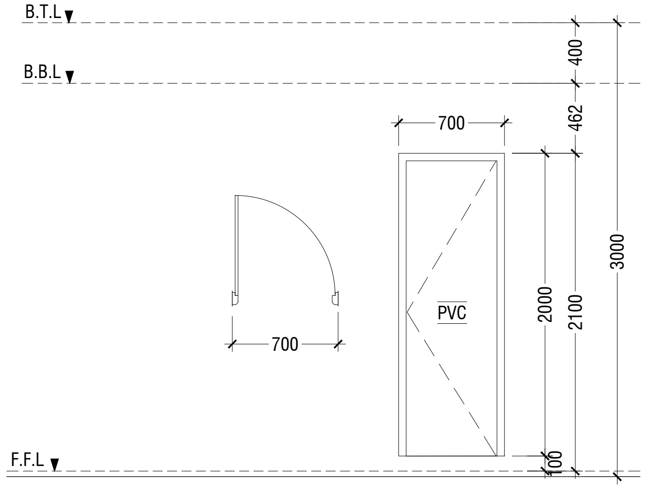
B.T.L
B.B.L
F.F.L
700
700
400
462
2000
2100
3000
100
PVC

D4	PVC SWING DOOR
REMARKS	PVC WHITE FRAME AND PANEL
LOCATION	TOILETS STALLS
QUANTITY	9 NOS
OPEN AREA	1.17 SQM

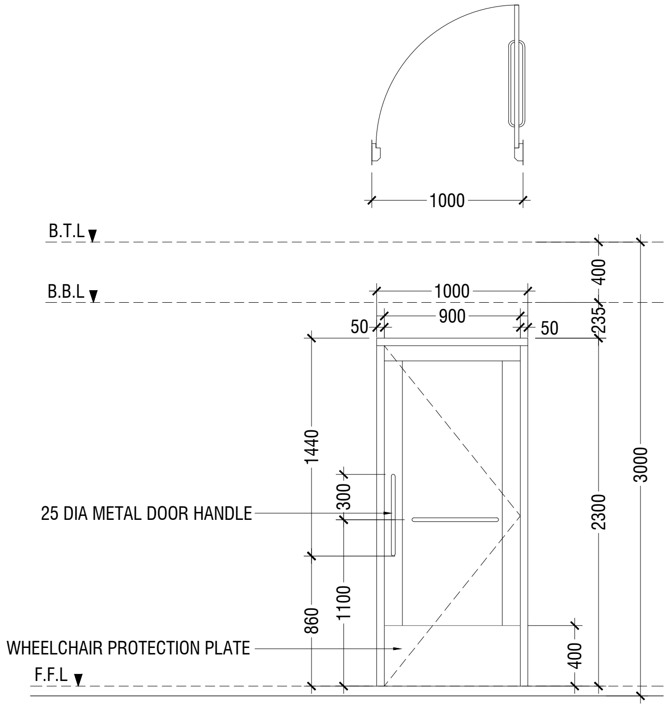
1000
B.T.L
B.B.L
F.F.L
1000
900
50
50
400
235
1440
300
2300
3000
860
1100
400
25 DIA METAL DOOR HANDLE
WHEELCHAIR PROTECTION PLATE

D5	SWING DOOR
REMARKS	50mm THICK WHITE POWDER COATED (60 MICRONS) ALUMINUM FRAMED WITH ALUMINIUM PANEL
LOCATION	DISABLED TOILET
QUANTITY	01 NOS
OPEN AREA	2.03 sqm

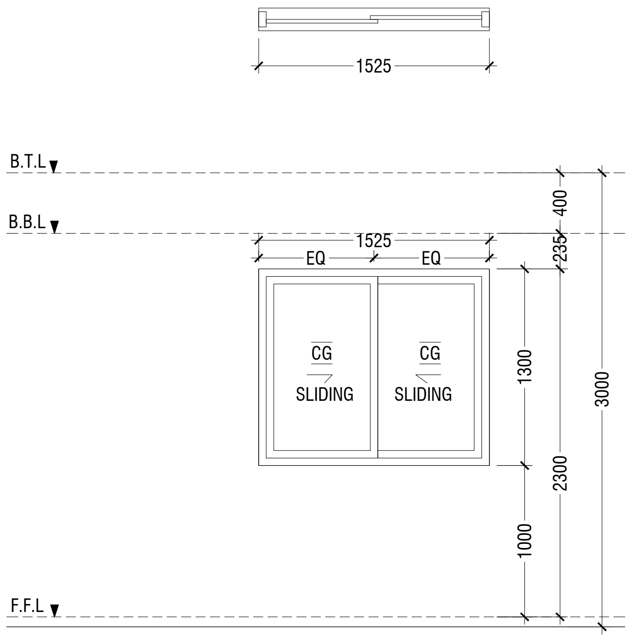
1525
B.T.L
B.B.L
F.F.L
1525
EQ
EQ
400
235
1300
2300
3000
1000
CG
SLIDING
CG
SLIDING

W1	SLIDING WINDOW
REMARKS	50mm THICK WHITE POWDER COATED (60 MICRONS) ALUMINUM FRAMED WITH ALUMINIUM PANEL AND 6mm THICK CLEAR GLASS
LOCATION	CLASSROOMS
QUANTITY	16 NOS
OPEN AREA	0.83 sqm

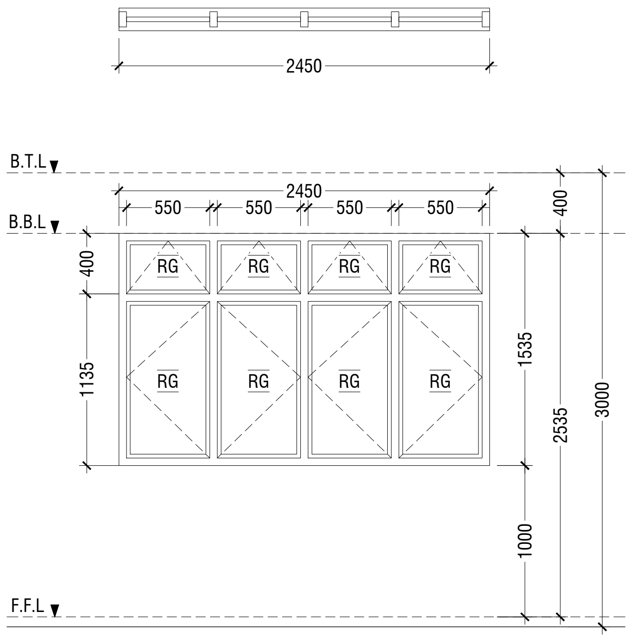
2450
B.T.L
B.B.L
F.F.L
2450
550
550
550
550
400
1135
400
1535
2535
3000
1000
RG
RG
RG
RG
RG
RG
RG
RG

W2	SWING WINDOW
REMARKS	50mm THICK WHITE POWDER COATED (60 MICRONS) ALUMINUM FRAMED WINDOW WITH 6mm THICK REFLECTIVE GLASS
LOCATION	CLASSROOMS
QUANTITY	16 NOS
OPEN AREA	2.97 sqm

LEGEND:
CG - CLEAR GLASS
RG - REFLECTED GLASS
AL - ALUMINIUM
PVC - POLYVINYL CHLORIDE

NOTE:-
1. FLOOR TO FLOOR HEIGHT VARIES AND WILL BE SUBJECTED TO CHANGES
2. MAINTAIN FLOOR TO WINDOW SILL STANDARD HEIGHT REGULATION OF 1M.
3, REFER TO ARCHITECT FOR FURTHER ASSISTANCE.
4. ALL DOORS & WINDOWS TO BE CHECKED ON SITE BEFORE FABRICATION.
5. ALL DOOR & WINDOWS VIEWED FROM EXTERIOR, FOR DOOR SWING, REFER TO FLOOR PLANS.
6. THE DOORS / WINDOWS WHICH DO NOT TOUCH THE BEAM SHALL HAVE A LINTEL BEAM (LB) ABOVE THE DOOR / WINDOW.
7. FOR ALL THE WINDOWS PUT A SILL BEAM BELOW THE WINDOW (SB)
8. FOR SAFETY PURPOSES REFER TO TECHNICAL SPECIFICATIONS FOR GLASS THICKNESS.

DOOR & WINDOW SCHEDULE - 1

SCALE 1:50

0 0.25 0.5 1 1.5 2 2.5

PHYSICAL FACILITIES DEVELOPMENT SECTION MINISTRY OF EDUCATION, REPUBLIC OF MALDIVES	PROJECT: 08 CLASSROOM AT R.UNGOOFAARU SCHOOL	ARCHITECT :
		ENGINEER :
		DRAWN :
	PROJECT REFERENCE	CHECKED :
	CLIENT: MINISTRY OF EDUCATION	DATE : 16.11.2021
	SCALE : AS GIVEN	DWG NO : A 09/ 20

AMMENDMENTS.

Issue	Date	Description

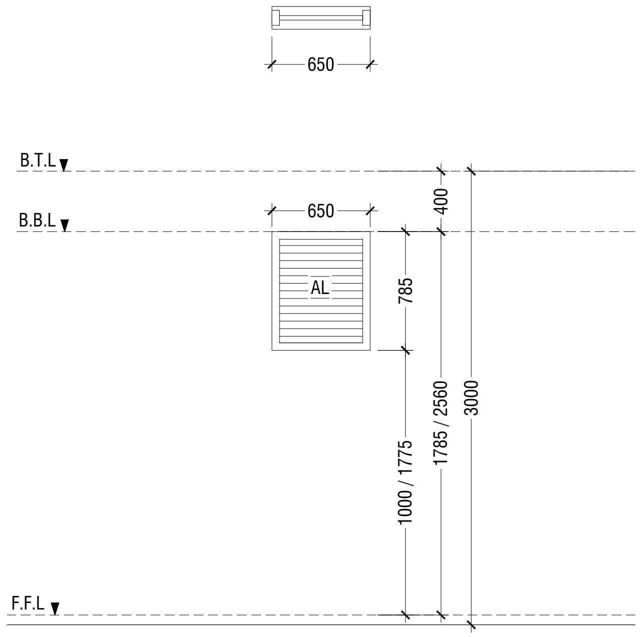
650
B.T.L
B.B.L
650
AL
400
785
1000 / 1775
1785 / 2560
3000
F.F.L

W3	WINDOW WITH ALUMINUM LOUVERS
REMARKS	50mm THICK WHITE POWDER COATED (60 MICRONS) ALUMINUM FRAMED WITH ALUMINUM LOUVERS
LOCATION	TOILETS & MAIN SWITCH BOARD STORE
QUANTITY	06 NOS
OPEN AREA	0.36 SQM

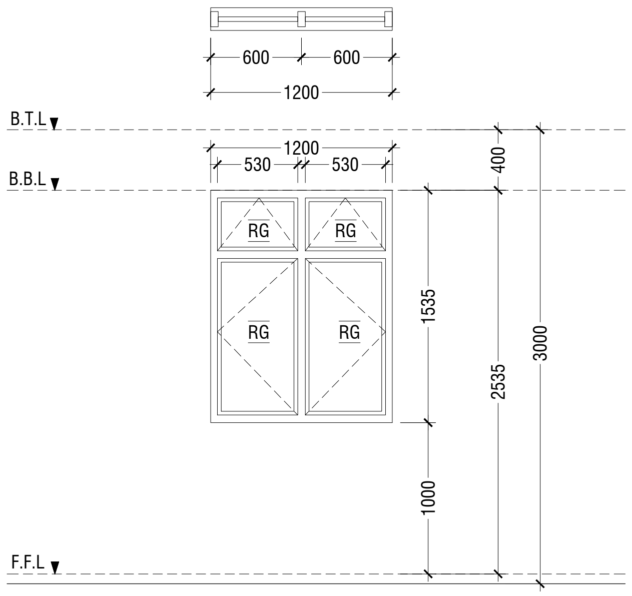
600
600
1200
B.T.L
B.B.L
1200
530
530
RG
RG
RG
RG
400
1535
2535
3000
1000
F.F.L

W4	SWING WINDOW
REMARKS	50mm THICK WHITE POWDER COATED (60 MICRONS) ALUMINUM FRAMED WINDOW WITH 6mm THICK REFLECTIVE GLASS
LOCATION	HALF LANDING STORE ROOM
QUANTITY	1 NOS
OPEN AREA	1.43 sqm

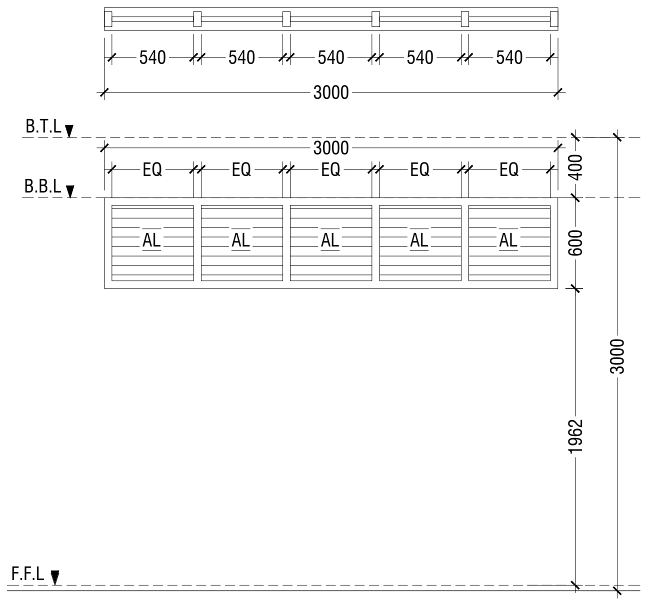
540
540
540
540
540
3000
B.T.L
B.B.L
3000
EQ
EQ
EQ
EQ
EQ
AL
AL
AL
AL
AL
400
600
1962
3000
F.F.L

V1	SUNSHADING
REMARKS	50mm THICK WHITE POWDER COATED (60 MICRONS) ALUMINUM FRAMED WITH ALUMINUM LOUVERS
LOCATION	CORRIDOR
QUANTITY	16 NOS
OPEN AREA	1.35 SQM

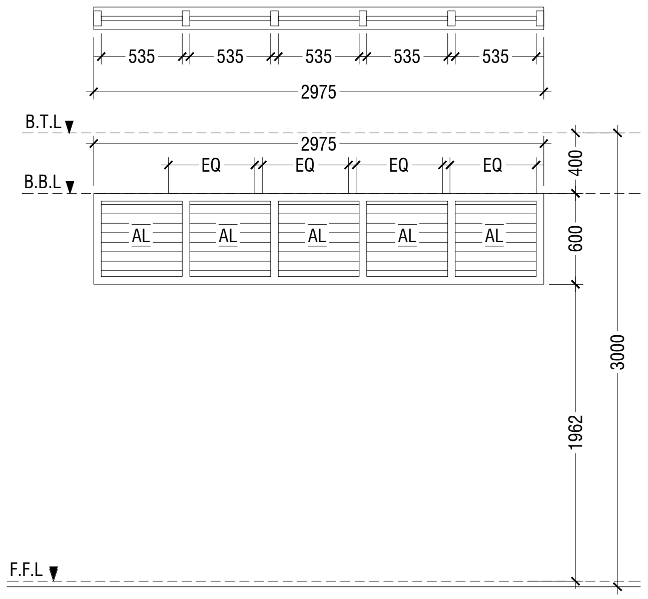
535
535
535
535
535
2975
B.T.L
B.B.L
2975
EQ
EQ
EQ
EQ
AL
AL
AL
AL
AL
400
600
1962
3000
F.F.L

V2	SUNSHADING
REMARKS	50mm THICK WHITE POWDER COATED (60 MICRONS) ALUMINUM FRAMED WITH ALUMINUM LOUVERS
LOCATION	CORRIDOR
QUANTITY	04 NOS
OPEN AREA	1.35 SQM

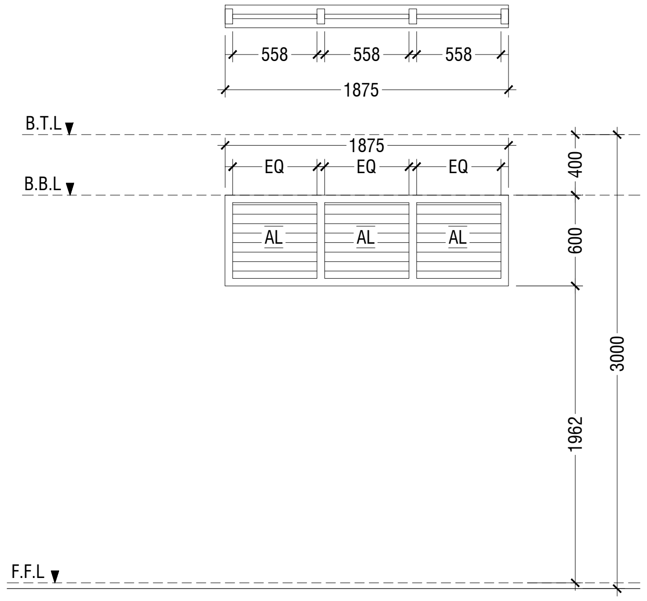
558
558
558
1875
B.T.L
B.B.L
1875
EQ
EQ
EQ
AL
AL
AL
400
600
1962
3000
F.F.L

V3	SUNSHADING
REMARKS	50mm THICK WHITE POWDER COATED (60 MICRONS) ALUMINUM FRAMED WITH ALUMINUM LOUVERS
LOCATION	CORRIDOR
QUANTITY	04 NOS
OPEN AREA	0.84 SQM

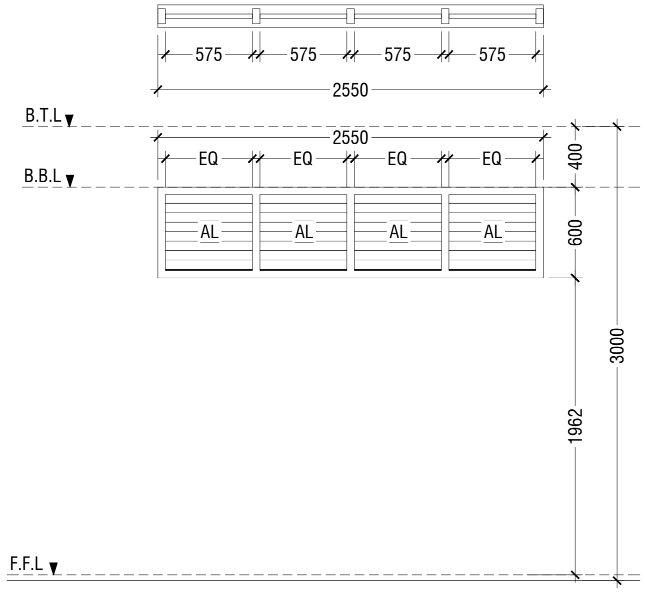
575
575
575
575
2550
B.T.L
B.B.L
2550
EQ
EQ
EQ
EQ
AL
AL
AL
AL
400
600
1962
3000
F.F.L

V4	SUNSHADING
REMARKS	50mm THICK WHITE POWDER COATED (60 MICRONS) ALUMINUM FRAMED WITH ALUMINUM LOUVERS
LOCATION	CORRIDOR
QUANTITY	02 NOS
OPEN AREA	1.15 SQM

NOTE:-
1. FLOOR TO FLOOR HEIGHT VARIES AND WILL BE SUBJECTED TO CHANGES
2. MAINTAIN FLOOR TO WINDOW SILL STANDARD HEIGHT REGULATION OF 1M.
3, REFER TO ARCHITECT FOR FURTHER ASSISTANCE.
4. ALL DOORS & WINDOWS TO BE CHECKED ON SITE BEFORE FABRICATION.
5. ALL DOOR & WINDOWS VIEWED FROM EXTERIOR, FOR DOOR SWING, REFER TO FLOOR PLANS.
6. THE DOORS / WINDOWS WHICH DO NOT TOUCH THE BEAM SHALL HAVE A LINTEL BEAM (LB) ABOVE THE DOOR / WINDOW.
7. FOR ALL THE WINDOWS PUT A SILL BEAM BELOW THE WINDOW (SB)
8. FOR SAFETY PURPOSES REFER TO TECHNICAL SPECIFICATIONS FOR GLASS THICKNESS.

LEGEND:
CG - CLEAR GLASS
RG - REFLECTED GLASS
AL - ALUMINIUM
PVC - POLYVINYL CHLORIDE

DOOR & WINDOW SCHEDULE - 2

SCALE 1:50

0
0.25
0.5
1
1.5
2
2.5

SCHEDULE OF VENTILATION FOR L.FONADHOO SCHOOL

Room name/ Number	Room Areas (sqm) (Specify centre to centre or clear)	Window (opening) number	Required opening areas (sqm)	Designed opening areas (sqm)	Open %
Ground Floor					
1 Classroom 1	52.81	2W1, 2W2 & 2D1	5.28	11.66	22.08%
2 Classroom 2	52.81	2W1, 2W2 & 2D1	5.28	11.66	22.08%
3 Classroom 3	52.81	2W1, 2W2 & 2D1	5.28	11.66	22.08%
4 Classroom 4	52.81	2W1, 2W2 & 2D1	5.28	11.66	22.08%
5 Toilet (F)	12.73		W3 & RC FINS		
6 Toilet (M)	9.09		W3 & RC FINS		
7 Toilet for disabled	5.12		Mechanical Ventilation		
8 Main switchboard /store	11.25		*Mechanical Ventilation*		
First to Second Floor					
1 Classroom 5	52.81	2W1, 2W2 & 2D1	5.28	11.66	22.08%
2 Classroom 6	52.81	2W1, 2W2 & 2D1	5.28	11.66	22.08%
3 Classroom 7	52.81	2W1, 2W2 & 2D1	5.28	11.66	22.08%
4 Classroom 8	52.81	2W1, 2W2 & 2D1	5.28	11.66	22.08%
5 Toilet (F)	16.24		W3 & RC FINS		
6 Toilet (M)	16.24		W3 & RC FINS		
7 Store at half landing level	7.22	W4	0.72	1.43	19.81%

VENTILATION SCHEDULE

NTS

PHYSICAL FACILITIES DEVELOPMENT SECTION MINISTRY OF EDUCATION, REPUBLIC OF MALDIVES	PROJECT: 08 CLASSROOM AT R.UNGOOFAARU SCHOOL	ARCHITECT : ENGINEER : DRAWN :
	PROJECT REFERENCE	CHECKED :
	CLIENT: MINISTRY OF EDUCATION	DATE : 16.11.2021
	SCALE : AS GIVEN	DWG NO : A 10/ 20

AMMENDMENTS.

Issue	Date	Description

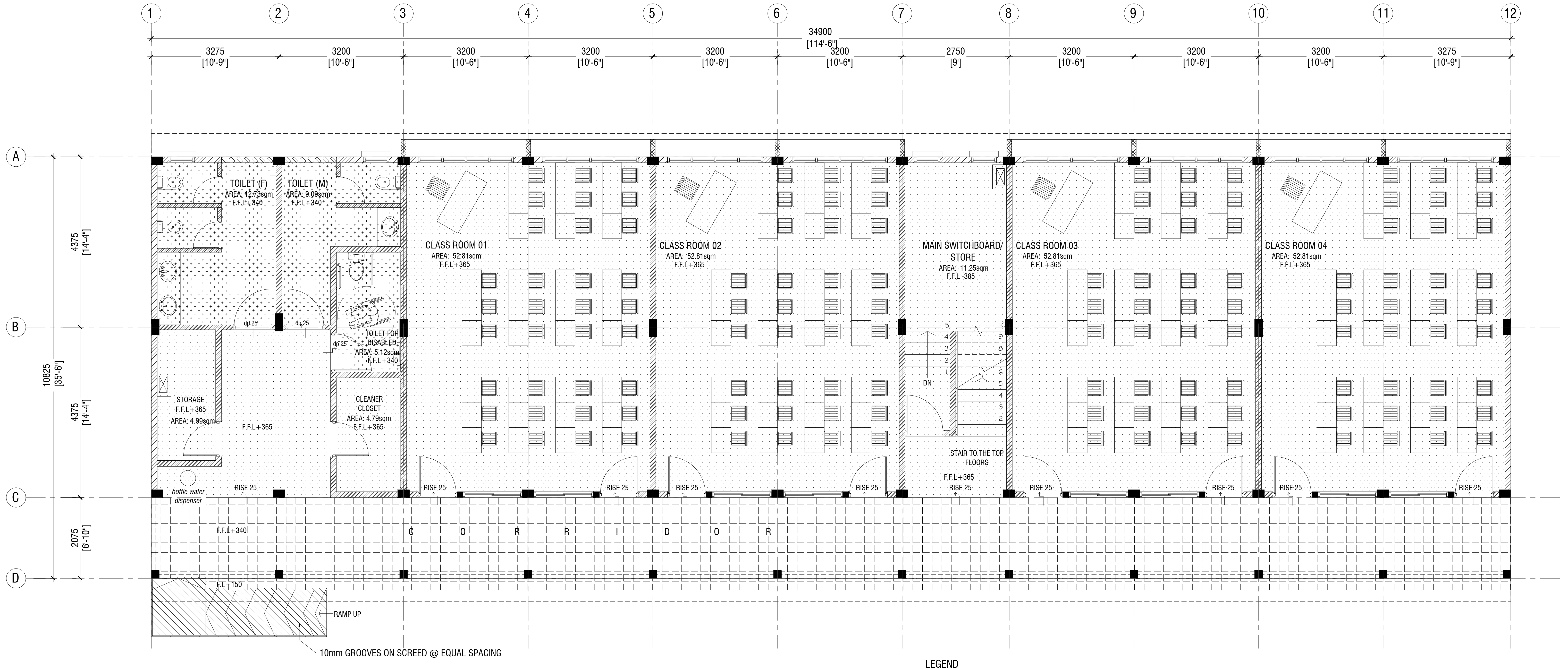
1
2
3
4
5
6
7
8
9
10
11
12
34900
[114'-6"]
3275
[10'-9"]
3200
[10'-6"]
2750
[9']
A
B
C
D
4375
[14'-4"]
10825
[35'-6"]
2075
[6'-10"]
TOILET (F)
AREA: 12.73sqm
F.F.L+340
TOILET (M)
AREA: 9.09sqm
F.F.L+340
dp 25
dp 25
TOILET FOR DISABLED
AREA: 5.12sqm
F.F.L+340
STORAGE
F.F.L+365
AREA: 4.99sqm
F.F.L+365
CLEANER CLOSET
AREA: 4.79sqm
F.F.L+365
bottle water dispenser
CLASS ROOM 01
AREA: 52.81sqm
F.F.L+365
CLASS ROOM 02
AREA: 52.81sqm
F.F.L+365
MAIN SWITCHBOARD/ STORE
AREA: 11.25sqm
F.F.L -385
DN
STAIR TO THE TOP FLOORS
F.F.L+365
CLASS ROOM 03
AREA: 52.81sqm
F.F.L+365
CLASS ROOM 04
AREA: 52.81sqm
F.F.L+365
RISE 25
F.F.L+340
C O R R I D O R
F.L+150
RAMP UP
10mm GROOVES ON SCREED @ EQUAL SPACING

GROUND FLOOR FLOOR FINISHES PLAN

SCALE 1:100

0 0.5 1 2 3 4 5

LEGEND

CODE	DESCRIPTION
░	600X600mm HOMOGENOUS NON-SLIP TILES OVER 50mm SCREEDING
▨	2.5mm SELF LEVELING CEMENT WITH EPOXY FLOORPAINT (2 COATS OF EPOXY)
▒	300X300mm HOMOGENOUS NON-SLIP TILES OVER 25mm SCREEDING
▦	600X600mm HOMOGENOUS NON-SLIP TILES OVER 25mm SCREEDING (CEMENTITIOUS WATERPROOFING: MASTERSEAL 588 OR EQUIVALENT ON TOP OF THE SLAB)

PHYSICAL FACILITIES DEVELOPMENT SECTION MINISTRY OF EDUCATION, REPUBLIC OF MALDIVES	PROJECT: 08 CLASSROOM AT R.UNGOOFAARU SCHOOL	ARCHITECT : ENGINEER : DRAWN :
	PROJECT REFERENCE	CHECKED :
	CLIENT: MINISTRY OF EDUCATION	DATE : 16.11.2021
	SCALE : AS GIVEN	DWG NO : A 11/ 20

AMMENDMENTS.

Issue	Date	Description

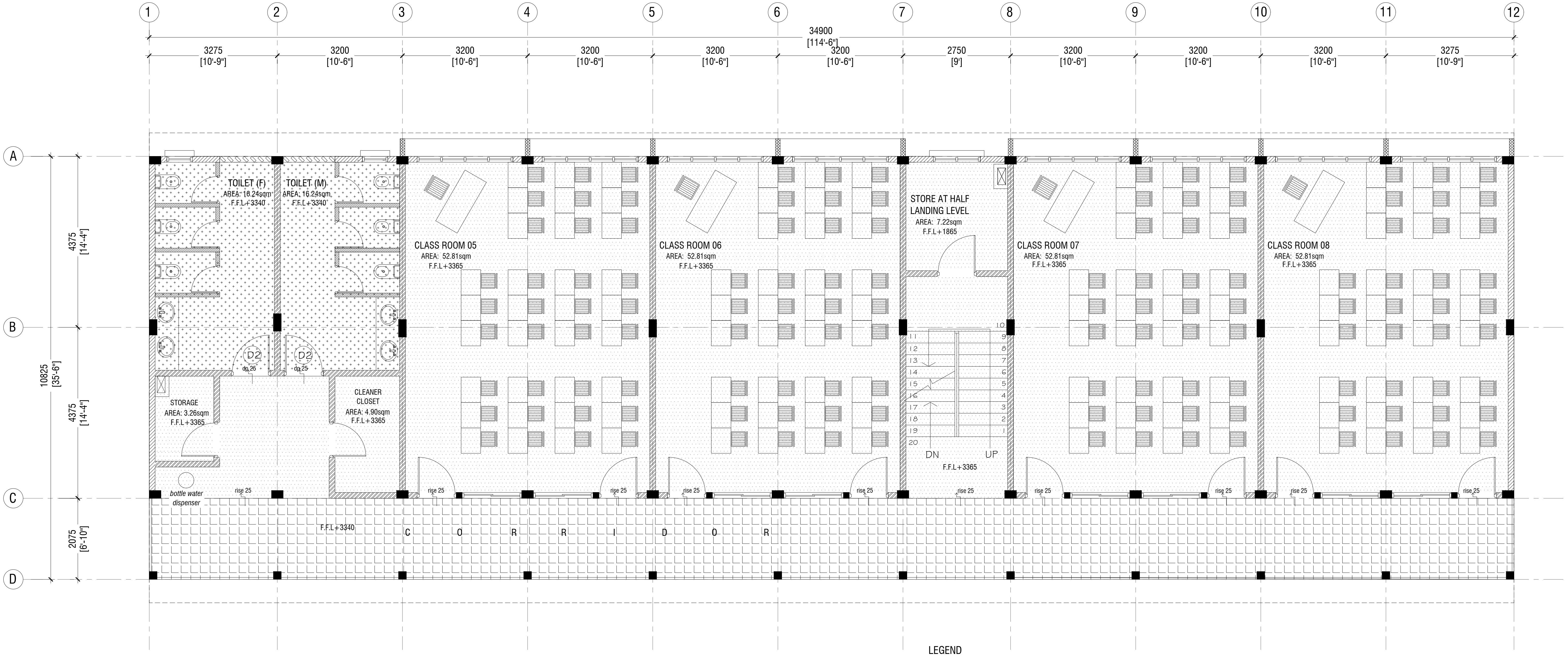
1
2
3
4
5
6
7
8
9
10
11
12
A
B
C
D
34900 [114'-6"]
3275 [10'-9"]
3200 [10'-6"]
2750 [9']
4375 [14'-4"]
10825 [35'-6"]
2075 [6'-10"]
TOILET (F) AREA: 16.24sqm F.F.L+3340
TOILET (M) AREA: 16.24sqm F.F.L+3340
D2
dn 25
STORAGE AREA: 3.26sqm F.F.L+3365
CLEANER CLOSET AREA: 4.90sqm F.F.L+3365
bottle water dispenser
CLASS ROOM 05 AREA: 52.81sqm F.F.L+3365
CLASS ROOM 06 AREA: 52.81sqm F.F.L+3365
STORE AT HALF LANDING LEVEL AREA: 7.22sqm F.F.L+1865
CLASS ROOM 07 AREA: 52.81sqm F.F.L+3365
CLASS ROOM 08 AREA: 52.81sqm F.F.L+3365
DN
UP
F.F.L+3365
rise 25
F.F.L+3340
CORRIDOR

FIRST FLOOR -
FLOOR FINISHES PLAN

SCALE 1:100

0 0.5 1 2 3 4 5

LEGEND

CODE	DESCRIPTION
░	600X600mm HOMOGENOUS NON-SLIP TILES OVER 50mm SCREEDING
▨	2.5mm SELF LEVELING CEMENT WITH EPOXY FLOORPAINT (2 COATS OF EPOXY)
▒	300X300mm HOMOGENOUS NON-SLIP TILES OVER 25mm SCREEDING
▦	600X600mm HOMOGENOUS NON-SLIP TILES OVER 25mm SCREEDING (CEMENTITIOUS WATERPROOFING: MASTERSEAL 588 OR EQUIVALENT ON TOP OF THE SLAB)

PHYSICAL FACILITIES DEVELOPMENT SECTION MINISTRY OF EDUCATION, REPUBLIC OF MALDIVES	PROJECT: 08 CLASSROOM AT R.UNGOOFAARU SCHOOL	ARCHITECT : ENGINEER : DRAWN :
	PROJECT REFERENCE	CHECKED :
	CLIENT: MINISTRY OF EDUCATION	DATE : 16.11.2021
	SCALE : AS GIVEN	DWG NO : A 01/ 20

AMMENDMENTS.

Issue	Date	Description

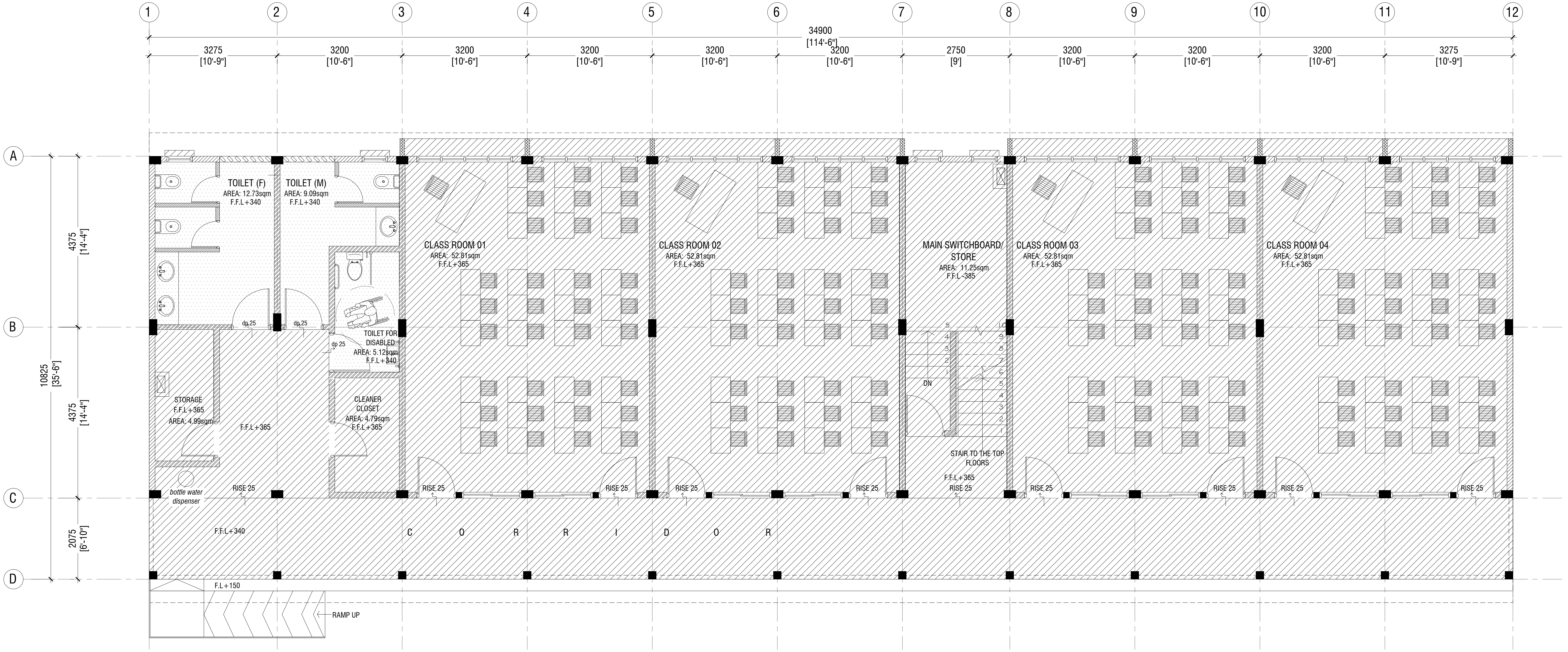
1
2
3
4
5
6
7
8
9
10
11
12
34900
[114'-6"]
3275 [10'-9"]
3200 [10'-6"]
3200 [10'-6"]
3200 [10'-6"]
3200 [10'-6"]
3200 [10'-6"]
2750 [9']
3200 [10'-6"]
3200 [10'-6"]
3200 [10'-6"]
3275 [10'-9"]
A
B
C
D
4375 [14'-4"]
4375 [14'-4"]
10825 [35'-6"]
2075 [6'-10"]
TOILET (F)
AREA: 12.73sqm
F.F.L+340
TOILET (M)
AREA: 9.09sqm
F.F.L+340
dp 25
dp 25
dp 25
TOILET FOR DISABLED
AREA: 5.12sqm
F.F.L+340
STORAGE
F.F.L+365
AREA: 4.99sqm
F.F.L+365
CLEANER CLOSET
AREA: 4.79sqm
F.F.L+365
bottle water dispenser
RISE 25
CLASS ROOM 01
AREA: 52.81sqm
F.F.L+365
CLASS ROOM 02
AREA: 52.81sqm
F.F.L+365
MAIN SWITCHBOARD/ STORE
AREA: 11.25sqm
F.F.L -385
DN
STAIR TO THE TOP FLOORS
F.F.L+365
RISE 25
CLASS ROOM 03
AREA: 52.81sqm
F.F.L+365
CLASS ROOM 04
AREA: 52.81sqm
F.F.L+365
RISE 25
F.F.L+340
C O R R I D O R
F.L+150
RAMP UP

GROUND FLOOR REFLECTED CEILING PLAN

SCALE 1:100

0 0.5 1 2 3 4 5

LEGEND

CODE	DESCRIPTION
▨	EXPOSED SLAB SOFFIT TO BE GROUND SMOOTH IN SELECT PAINT FINISH (ONE COAT OF PUTTY FOLLOWED BY SEALER AND 2 COATS OF PAINT)
░	6mm THICK CEMENT BOARD ON ROOF EAVE/GABLE CEILING (ONE COAT OF PUTTY FOLLOWED BY SEALER AND 2 COATS OF PAINT)

PHYSICAL FACILITIES DEVELOPMENT SECTION
MINISTRY OF EDUCATION,
REPUBLIC OF MALDIVES

PROJECT: 08 CLASSROOM AT R.UNGOOFAARU SCHOOL	ARCHITECT :	
	ENGINEER :	
	DRAWN :	
PROJECT REFERENCE	CHECKED :	
CLIENT: MINISTRY OF EDUCATION	DATE : 16.11.2021	
SCALE : AS GIVEN	DWG NO : A 13/ 20	

AMMENDMENTS.

Issue	Date	Description

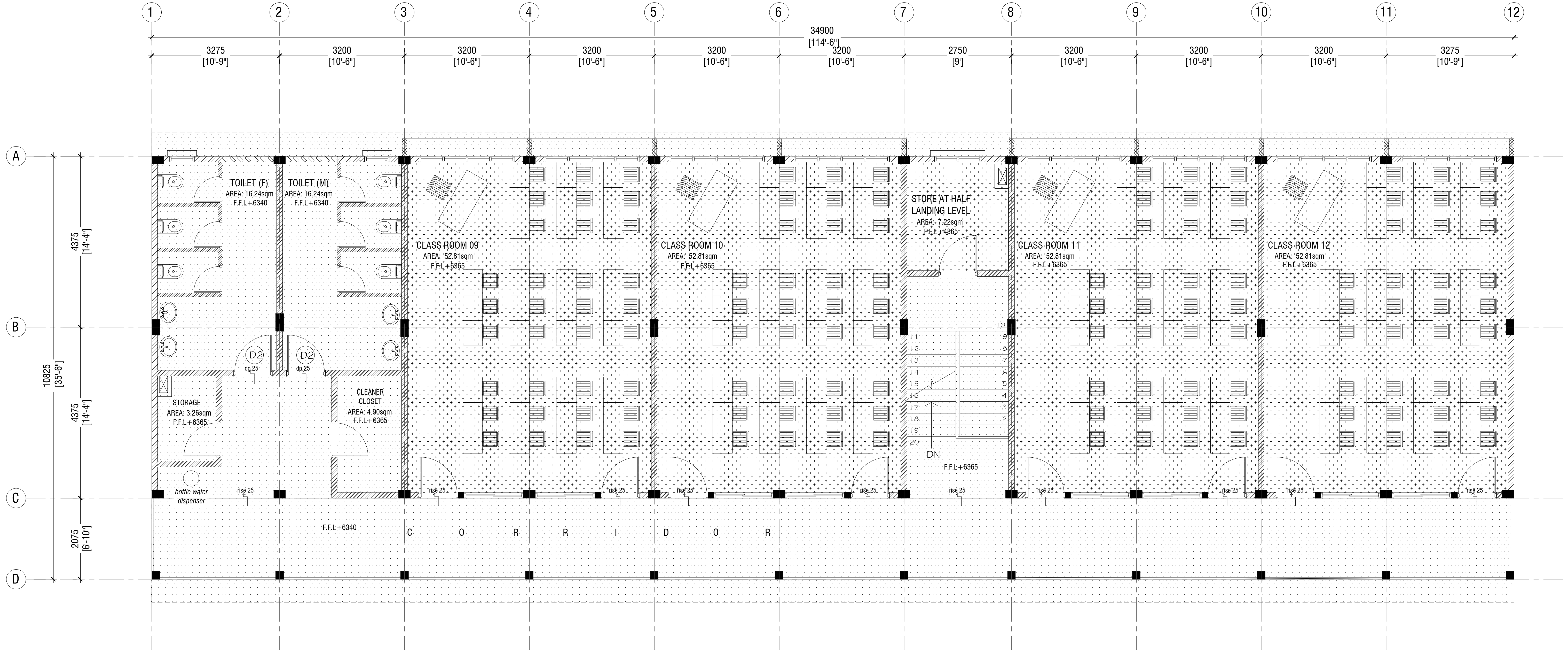
1
2
3
4
5
6
7
8
9
10
11
12
34900
[114'-6"]
3275
[10'-9"]
3200
[10'-6"]
2750
[9']
A
B
C
D
4375
[14'-4"]
10825
[35'-6"]
2075
[6'-10"]
TOILET (F)
AREA: 16.24sqm
F.F.L +6340
TOILET (M)
AREA: 16.24sqm
F.F.L +6340
D2
dn 25
STORAGE
AREA: 3.26sqm
F.F.L +6365
CLEANER CLOSET
AREA: 4.90sqm
F.F.L +6365
bottle water dispenser
rise 25
CLASS ROOM 09
AREA: 52.81sqm
F.F.L +6365
CLASS ROOM 10
AREA: 52.81sqm
F.F.L +6365
STORE AT HALF LANDING LEVEL
AREA: 7.22sqm
F.F.L +4865
DN
F.F.L +6365
CLASS ROOM 11
AREA: 52.81sqm
F.F.L +6365
CLASS ROOM 12
AREA: 52.81sqm
F.F.L +6365
F.F.L +6340
CORRIDOR

FIRST FLOOR
REFLECTED CEILING PLAN

SCALE 1:100

0 0.5 1 2 3 4 5

LEGEND

CODE	DESCRIPTION
▨	9mm THICK FIXED CEILING 'BORAL' OR EQUIVALENT PLASTERBOARD CEILING SYSTEM WITH TIMBER FRAMES, APPLIED WITH GROUND SMOOTH FINISH IN SELECTED PAINT
░	6mm THICK CEMENT BOARD ON ROOF EAVE/GABLE CEILING (ONE COAT OF PUTTY FOLLOWED BY SEALER AND 2 COATS OF PAINT)

PHYSICAL FACILITIES DEVELOPMENT SECTION MINISTRY OF EDUCATION, REPUBLIC OF MALDIVES	PROJECT: 08 CLASSROOM AT R.UNGOOFAARU SCHOOL	ARCHITECT : ENGINEER : DRAWN :
	PROJECT REFERENCE	CHECKED :
	CLIENT: MINISTRY OF EDUCATION	DATE : 16.11.2021
	SCALE : AS GIVEN	DWG NO : A 14/ 20

AMMENDMENTS.

Issue	Date	Description

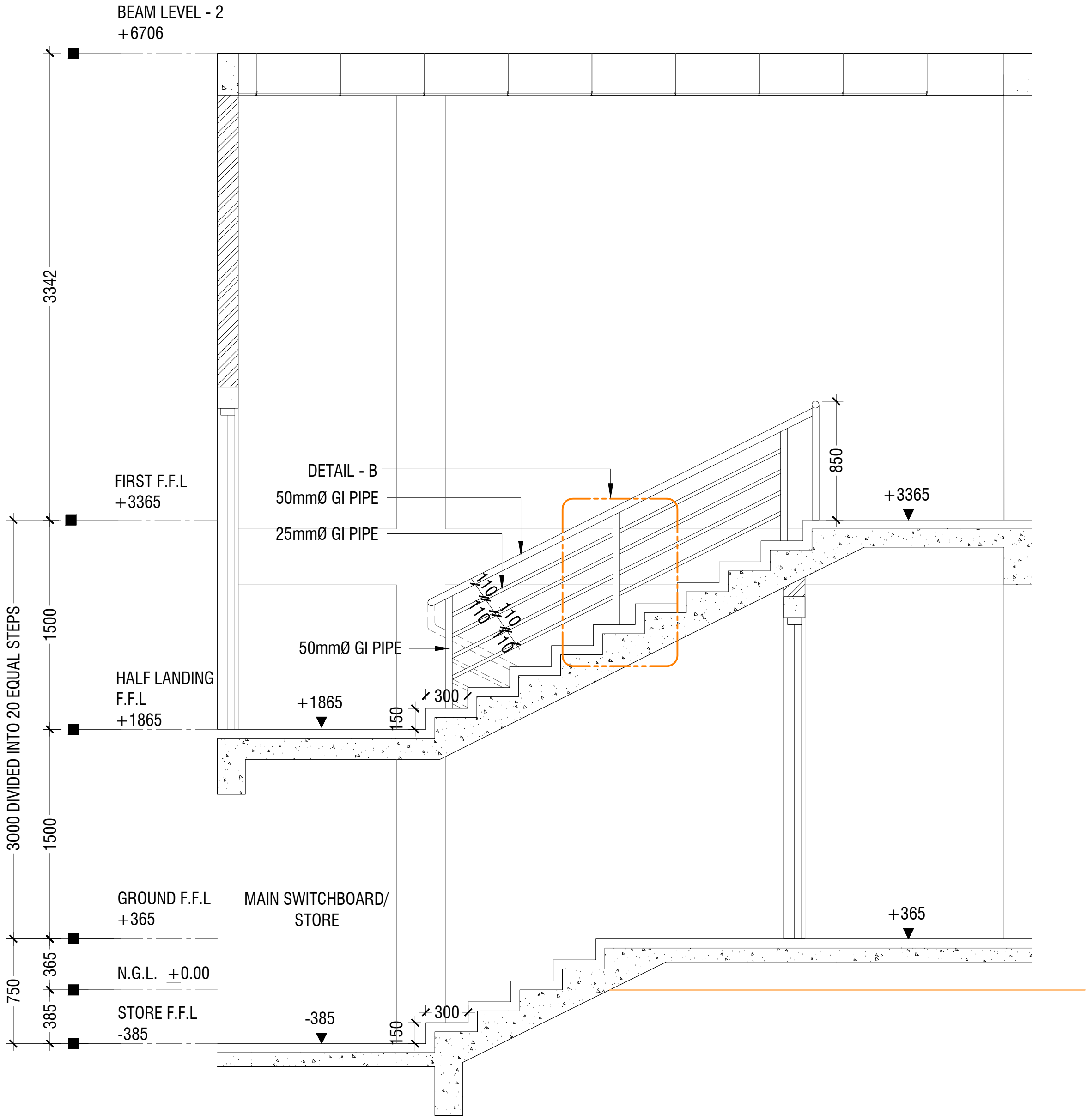
BEAM LEVEL - 2
+6706
3342
FIRST F.F.L
+3365
1500
3000 DIVIDED INTO 20 EQUAL STEPS
HALF LANDING
F.F.L
+1865
1500
GROUND F.F.L
+365
750
365
385
N.G.L. ±0.00
STORE F.F.L
-385
DETAIL - B
50mmØ GI PIPE
25mmØ GI PIPE
50mmØ GI PIPE
850
+3365
110
110
110
110
+1865
300
150
MAIN SWITCHBOARD/
STORE
+365
-385
300
150

SECTION A-A

SCALE 1:50

0 0.25 0.5 1 1.5 2 2.5

DETAIL - 1
STAIRCASE DETAILS

SCALE 1:20

0 0.1 0.2 0.4 0.6 0.8 1

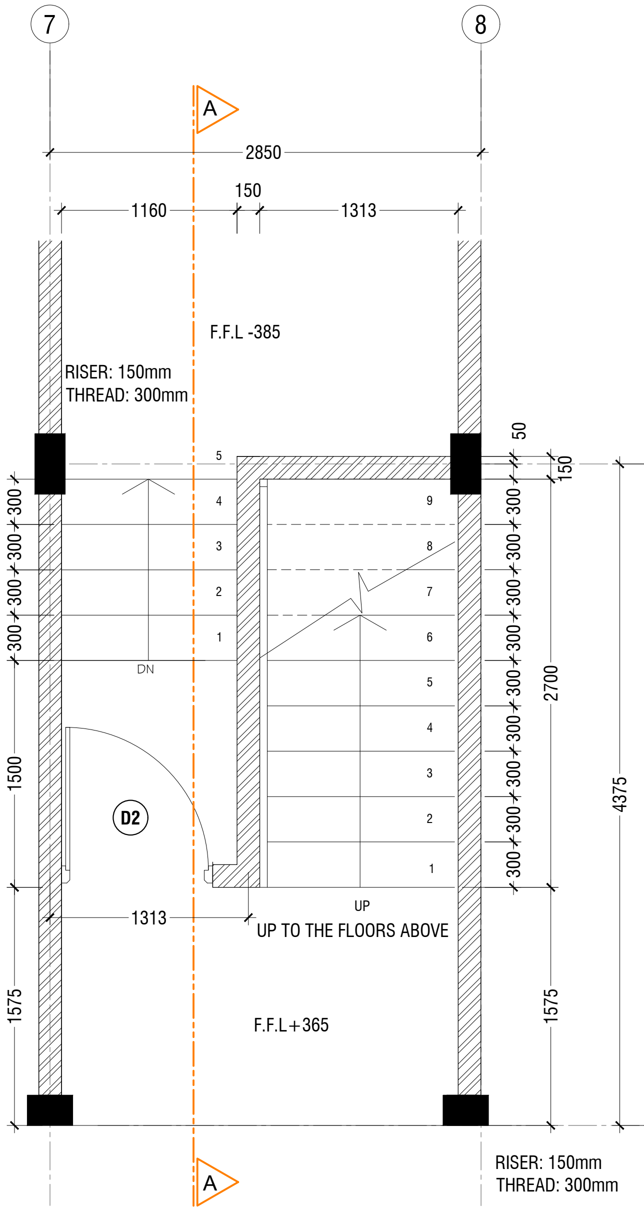
7
8
A
2850
1160
150
1313
F.F.L -385
RISER: 150mm
THREAD: 300mm
5
4
3
2
1
DN
9
8
7
6
5
4
3
2
1
50
150
300
2700
4375
1500
1575
D2
1313
UP
UP TO THE FLOORS ABOVE
F.F.L+365
1575
A
RISER: 150mm
THREAD: 300mm

GROUND FLOOR STAIRCASE PLAN

SCALE 1:50

0 0.25 0.5 1 1.5 2 2.5

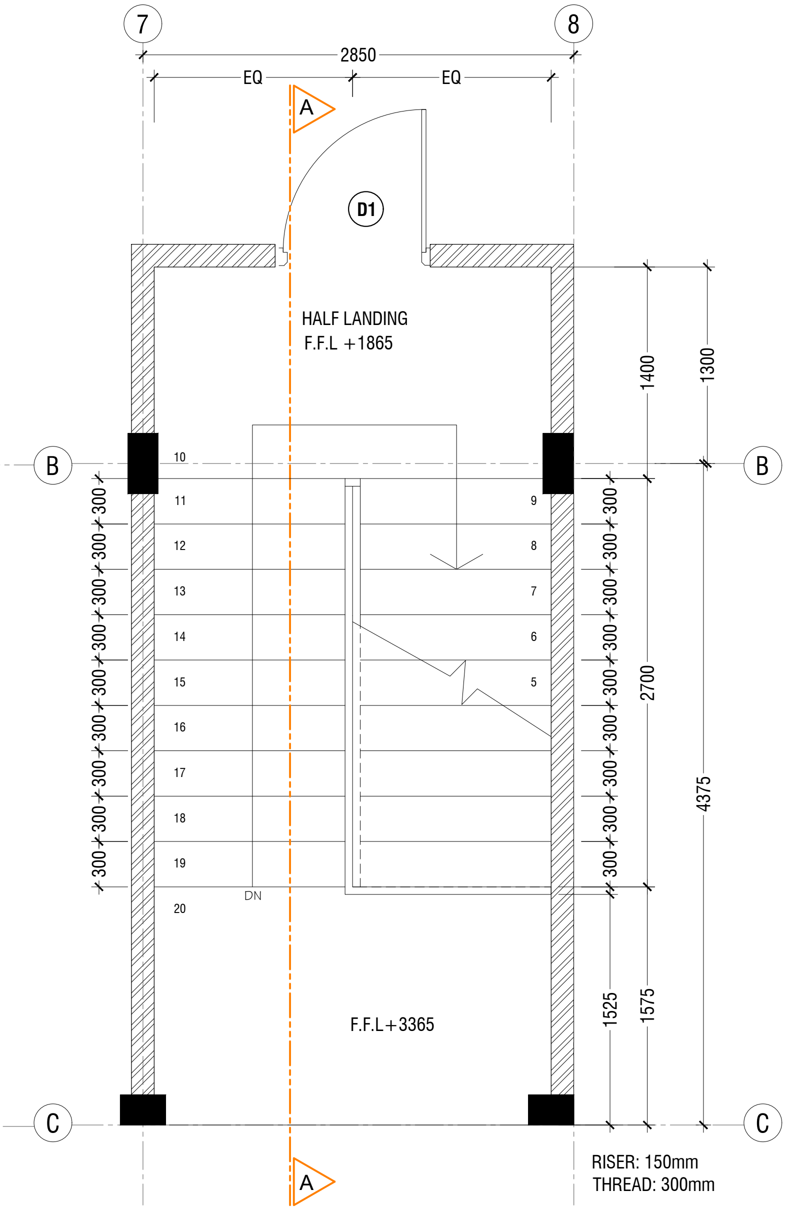
7
8
2850
EQ
EQ
A
D1
HALF LANDING
F.F.L +1865
1400
1300
B
10
11
12
13
14
15
16
17
18
19
20
9
8
7
6
5
DN
300
2700
4375
1525
1575
F.F.L+3365
C
A
RISER: 150mm
THREAD: 300mm

TYPICAL STAIRCASE PLAN

SCALE 1:50

0 0.25 0.5 1 1.5 2 2.5

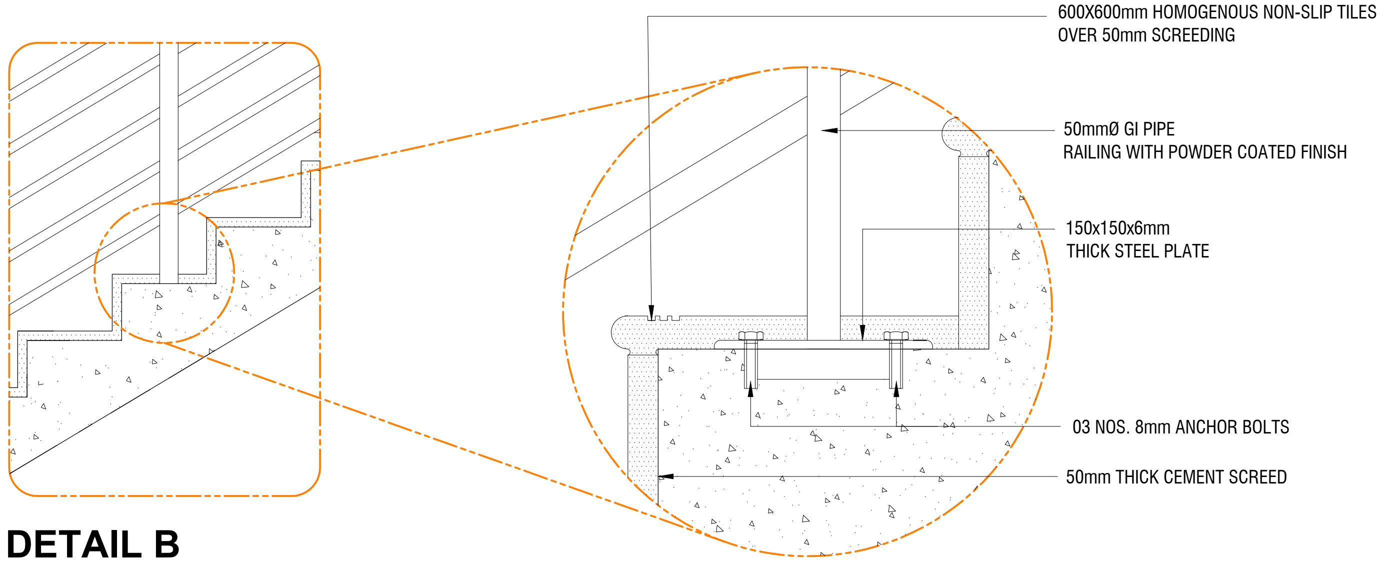
600X600mm HOMOGENOUS NON-SLIP TILES
OVER 50mm SCREEDING
50mmØ GI PIPE
RAILING WITH POWDER COATED FINISH
150x150x6mm
THICK STEEL PLATE
03 NOS. 8mm ANCHOR BOLTS
50mm THICK CEMENT SCREED

DETAIL B

SCALE 1:20

0 0.1 0.2 0.4 0.6 0.8 1

PHYSICAL FACILITIES DEVELOPMENT SECTION MINISTRY OF EDUCATION, REPUBLIC OF MALDIVES	PROJECT: 08 CLASSROOM AT R.UNGOOFAARU SCHOOL	ARCHITECT :
		ENGINEER :
		DRAWN :
	PROJECT REFERENCE	CHECKED :
	CLIENT: MINISTRY OF EDUCATION	DATE : 16.11.2021
	SCALE : AS GIVEN	DWG NO : A 15/ 20

AMMENDMENTS.

Issue	Date	Description

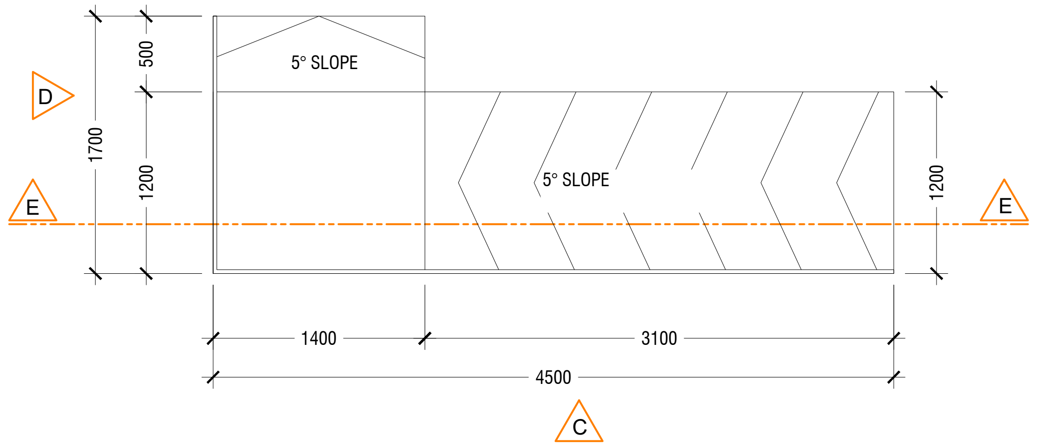
500
1700
1200
1200
5° SLOPE
5° SLOPE
D
E
E
1400
3100
4500
C

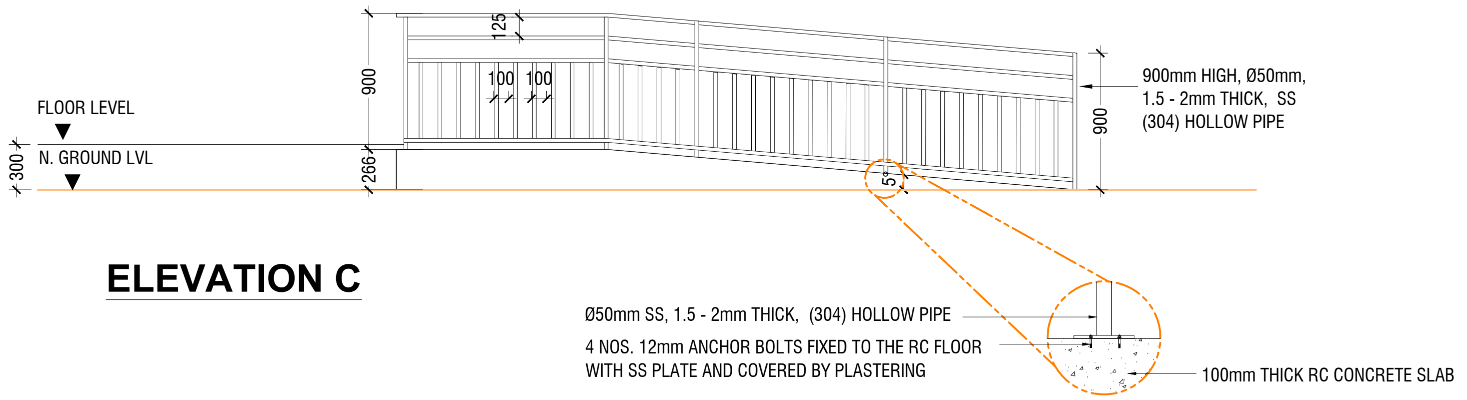
125
100 100
900
900
FLOOR LEVEL
N. GROUND LVL
300
266
5°
900mm HIGH, Ø50mm,
1.5 - 2mm THICK, SS
(304) HOLLOW PIPE
Ø50mm SS, 1.5 - 2mm THICK, (304) HOLLOW PIPE
4 NOS. 12mm ANCHOR BOLTS FIXED TO THE RC FLOOR
WITH SS PLATE AND COVERED BY PLASTERING
100mm THICK RC CONCRETE SLAB

ELEVATION C

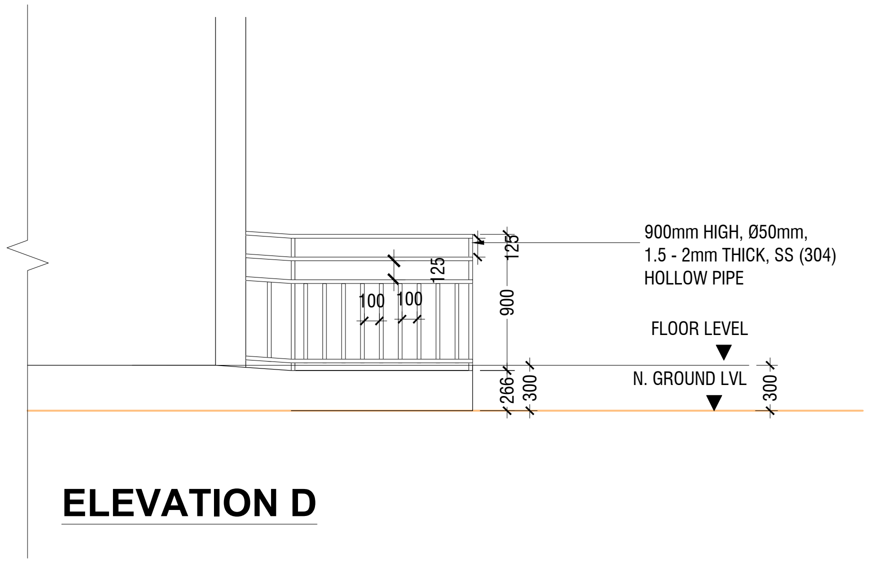
900mm HIGH, Ø50mm,
1.5 - 2mm THICK, SS (304)
HOLLOW PIPE
125
125
100 100
900
FLOOR LEVEL
N. GROUND LVL
266
300
300

ELEVATION D

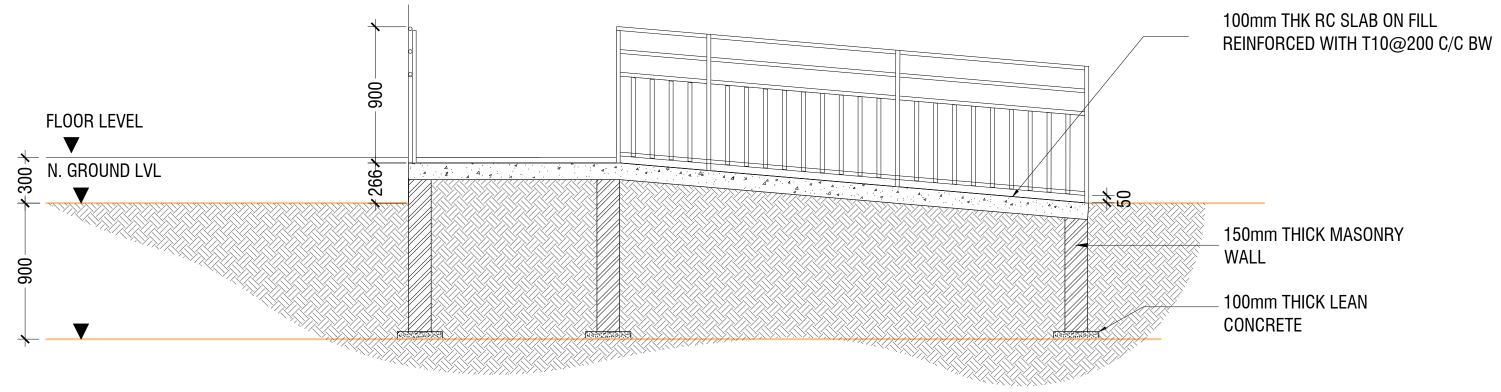
100mm THK RC SLAB ON FILL
REINFORCED WITH T10@200 C/C BW
FLOOR LEVEL
N. GROUND LVL
900
266
300
900
50
150mm THICK MASONRY
WALL
100mm THICK LEAN
CONCRETE

SECTION E-E

DETAIL - 2
MAIN ENTRANCE RAMP DETAILS

SCALE 1:50

0
0.25
0.5
1
1.5
2
2.5

	PROJECT: 08 CLASSROOM AT R.UNGOOFAARU SCHOOL	ARCHITECT :
		ENGINEER :
		DRAWN :
PHYSICAL FACILITIES DEVELOPMENT SECTION MINISTRY OF EDUCATION, REPUBLIC OF MALDIVES	PROJECT REFERENCE	CHECKED :
	CLIENT: MINISTRY OF EDUCATION	DATE : 16.11.2021
	SCALE : AS GIVEN	DWG NO : A 16/ 20

AMMENDMENTS.

Issue	Date	Description

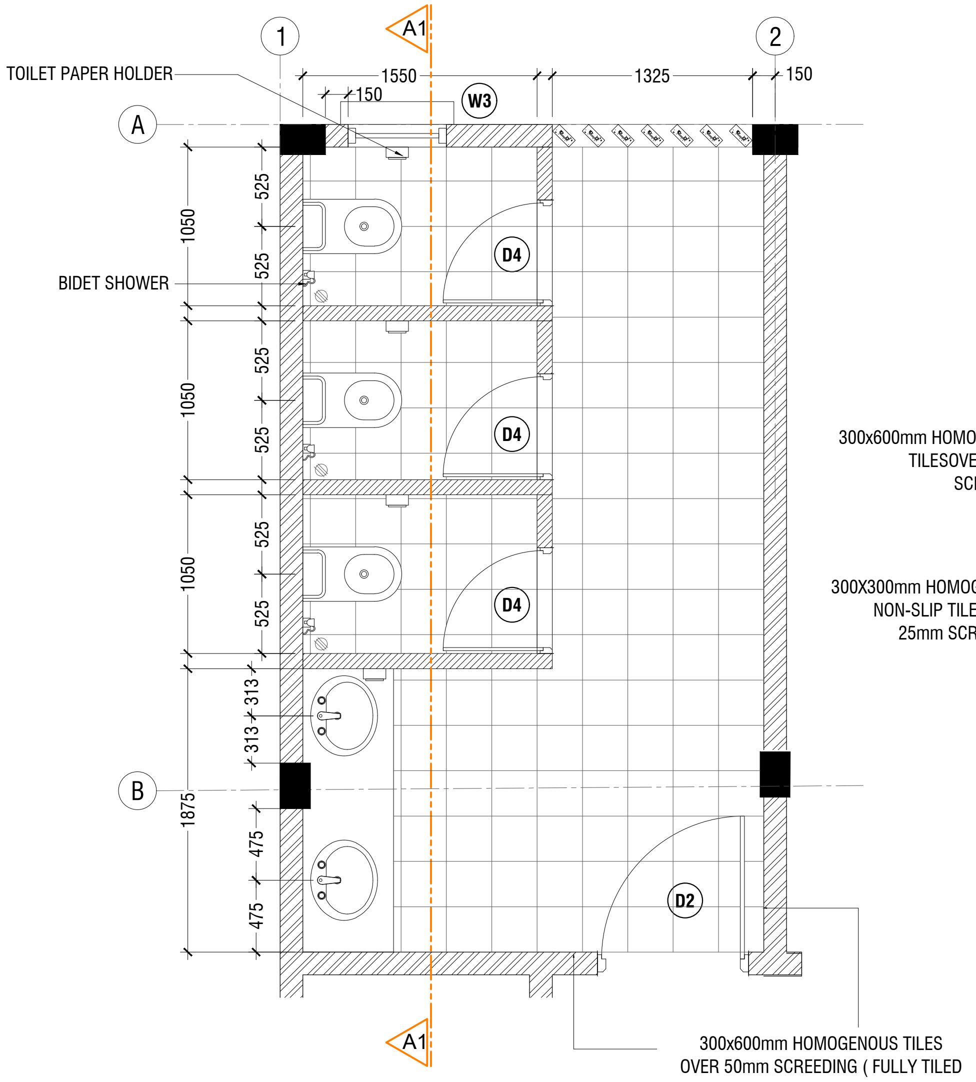
TOILET PAPER HOLDER
BIDET SHOWER
1
2
A1
A
B
1550
1325
150
150
W3
D4
D4
D4
D2
525
1050
313
1875
475
300x600mm HOMOGENOUS TILES OVER 50mm SCREEDING (FULLY TILED AS THE OTHER WALLS)

TYPICAL TOILET PLAN

SCALE 1:50

0 0.25 0.5 1 1.5 2 2.5

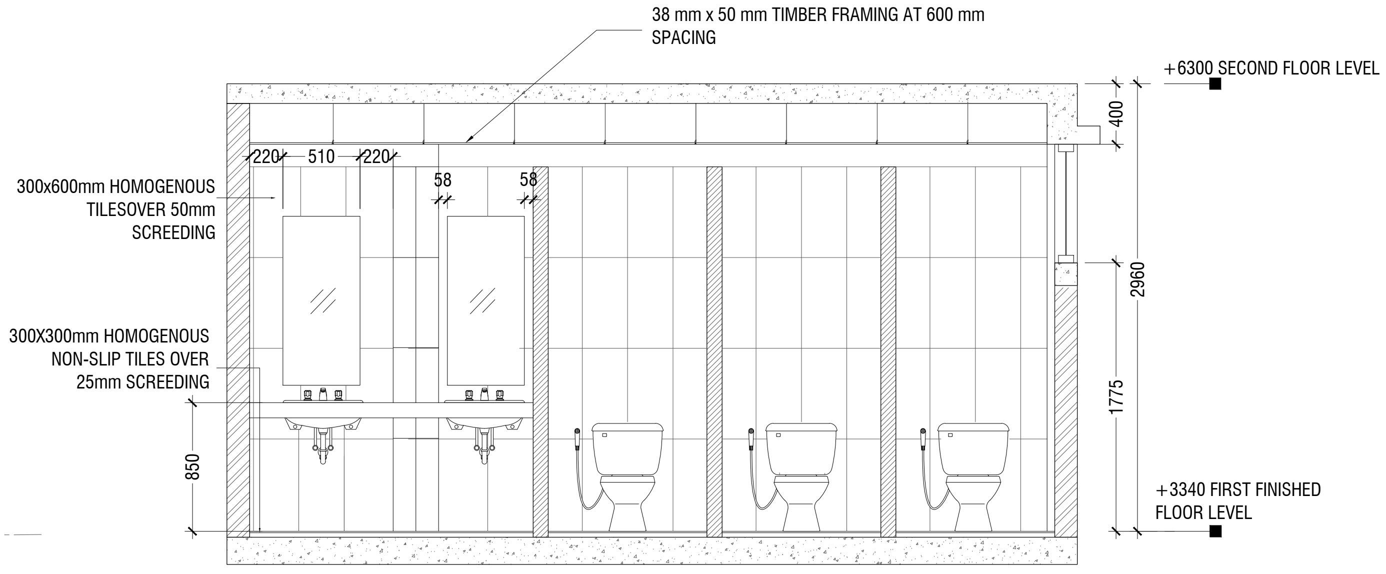
38 mm x 50 mm TIMBER FRAMING AT 600 mm SPACING
300x600mm HOMOGENOUS TILESOVER 50mm SCREEDING
300X300mm HOMOGENOUS NON-SLIP TILES OVER 25mm SCREEDING
+6300 SECOND FLOOR LEVEL
+3340 FIRST FINISHED FLOOR LEVEL
220
510
220
58
58
850
400
2960
1775

SECTION A1-A1

SCALE 1:50

0 0.25 0.5 1 1.5 2 2.5

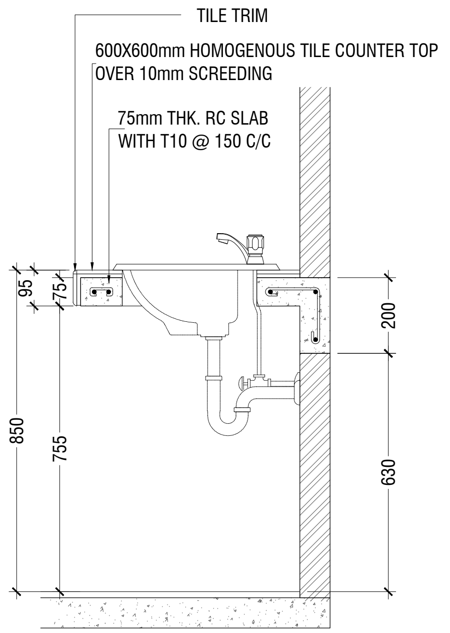
TILE TRIM
600X600mm HOMOGENOUS TILE COUNTER TOP OVER 10mm SCREEDING
75mm THK. RC SLAB WITH T10 @ 150 C/C
95
75
850
755
200
630

COUNTER TOP DETAILS

SCALE 1:20

0 0.1 0.2 0.4 0.6 0.8 1

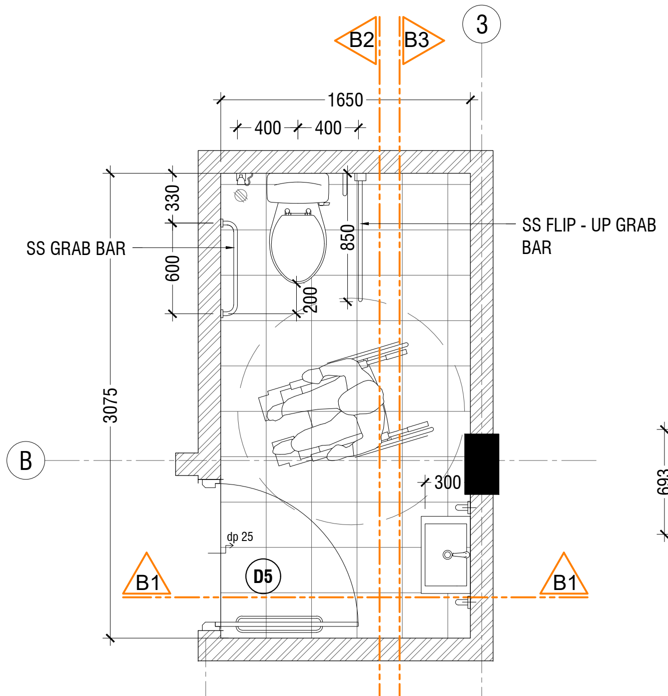
B2
B3
3
1650
400
400
SS GRAB BAR
SS FLIP - UP GRAB BAR
330
600
850
200
3075
B
300
dp 25
D5
B1
B1

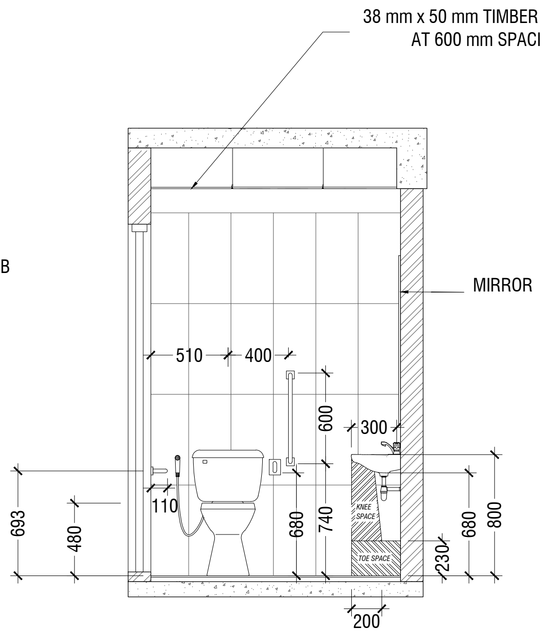
38 mm x 50 mm TIMBER FRAMING AT 600 mm SPACING
MIRROR
510
400
600
300
110
693
480
680
740
680
800
230
200

SECTION B1-B1

SCALE 1:50

0 0.25 0.5 1 1.5 2 2.5

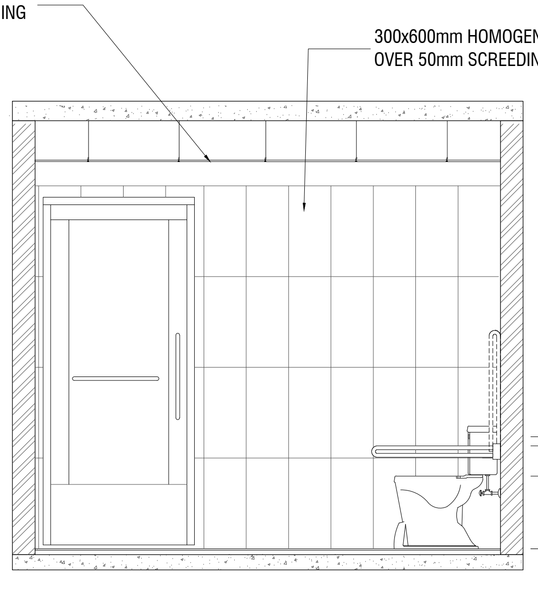
300x600mm HOMOGENOUS TILES OVER 50mm SCREEDING
450
680
740

SECTION B2-B2

SCALE 1:50

0 0.25 0.5 1 1.5 2 2.5

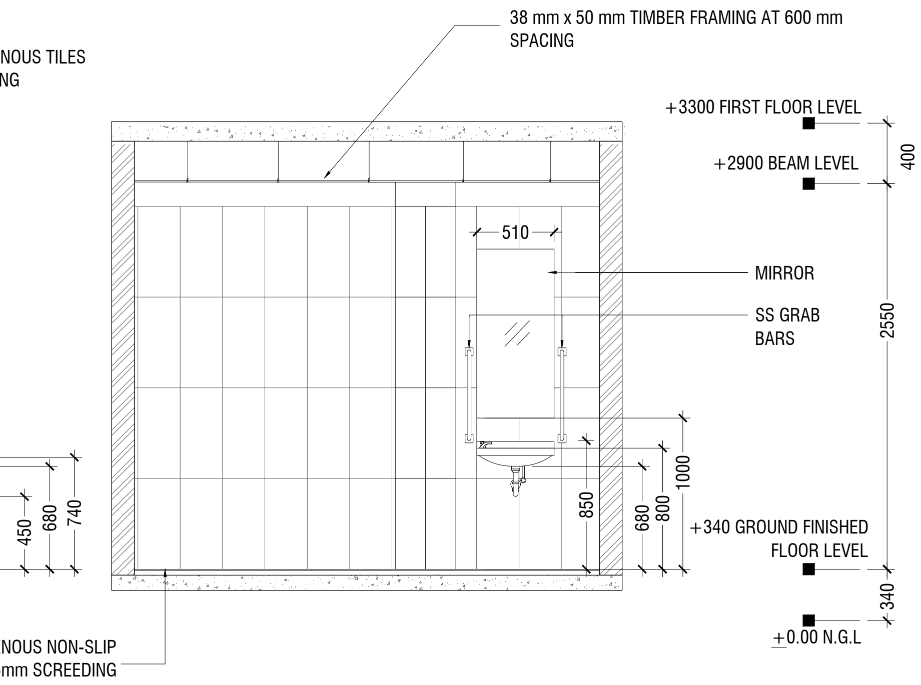
38 mm x 50 mm TIMBER FRAMING AT 600 mm SPACING
+3300 FIRST FLOOR LEVEL
+2900 BEAM LEVEL
MIRROR
SS GRAB BARS
+340 GROUND FINISHED FLOOR LEVEL
+0.00 N.G.L
510
400
2550
340
1000
850
680
800
300X300mm HOMOGENOUS NON-SLIP TILES OVER 25mm SCREEDING

NOTE:
ALL THE MATERIALS FOR FIXTURES SHALL BE APPROVED
BY THE ARCHITECT/CONSULTANT BEFORE INSTALLATION

GRAB BARS OF THE DISABLE TOILET SHALL BE AS PER MANUFACTURE'S DETAIL

SECTION B3-B3

SCALE 1:50

0 0.25 0.5 1 1.5 2 2.5

DETAIL - 3
TOILET DETAILS

SCALE 1:50

0 0.25 0.5 1 1.5 2 2.5

TOILET FOR PERSONS WITH DISABILITIES PLAN

SCALE 1:50

0 0.25 0.5 1 1.5 2 2.5

PHYSICAL FACILITIES DEVELOPMENT SECTION
MINISTRY OF EDUCATION,
REPUBLIC OF MALDIVES

PROJECT: 08 CLASSROOM AT R.UNGOOFAARU SCHOOL	ARCHITECT :	
	ENGINEER :	
	DRAWN :	
PROJECT REFERENCE	CHECKED :	
CLIENT: MINISTRY OF EDUCATION	DATE : 16.11.2021	
SCALE : AS GIVEN	DWG NO : A 17/ 20	

AMMENDMENTS.

Issue	Date	Description

PLAN

SCALE 1:20

0 0.1 0.2 0.4 0.6 0.8 1

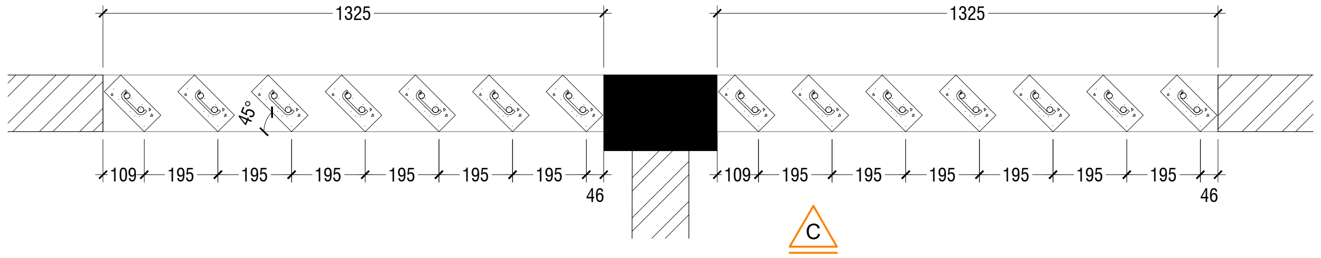
1325
1325
45°
109
195
195
195
195
195
195
46
109
195
195
195
195
195
195
46
C

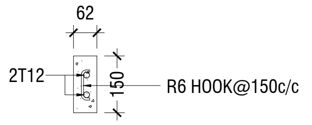
62
2T12
150
R6 HOOK@150c/c

(Cover 35mm)

RC FIN DETAIL

SCALE 1:20

0 0.1 0.2 0.4 0.6 0.8 1

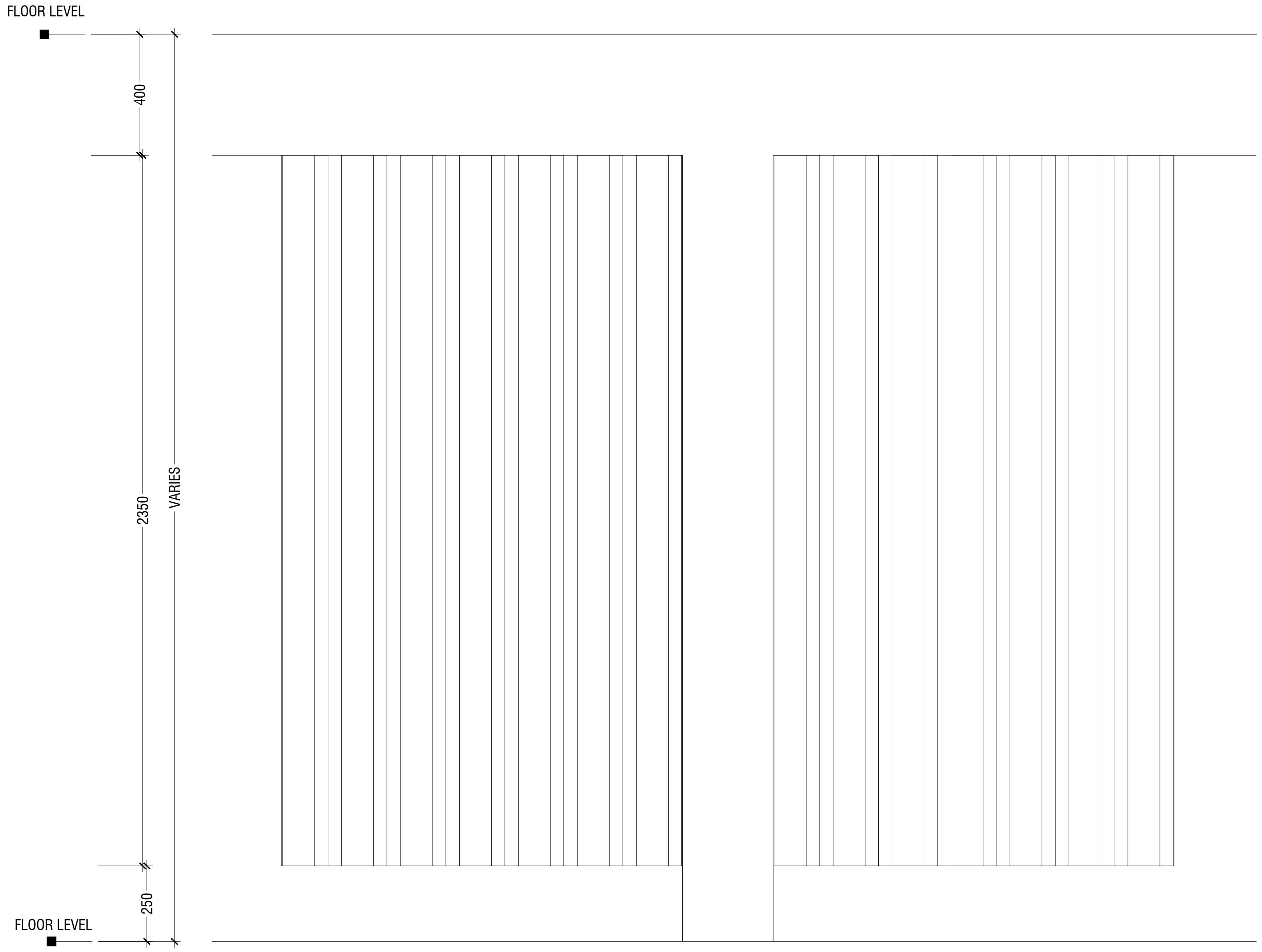
FLOOR LEVEL
400
2350
VARIES
250
FLOOR LEVEL

ELEVATION - C

SCALE 1:20

0 0.1 0.2 0.4 0.6 0.8 1

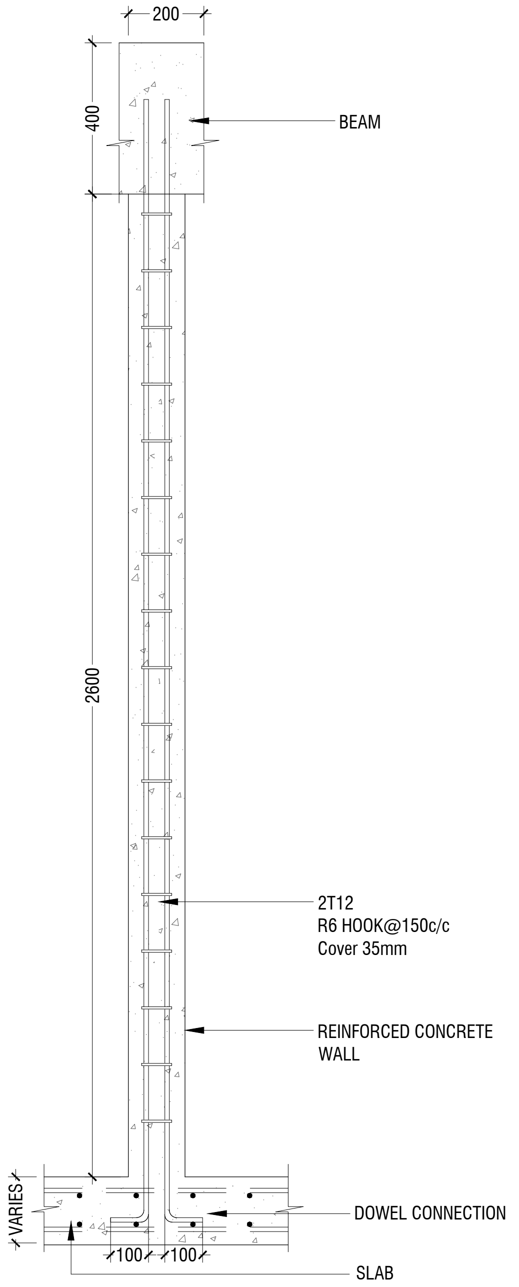
200
400
BEAM
2600
2T12
R6 HOOK@150c/c
Cover 35mm
REINFORCED CONCRETE
WALL
VARIES
DOWEL CONNECTION
100
100
SLAB

SECTION C-C

SCALE 1:20

0 0.1 0.2 0.4 0.6 0.8 1

DETAIL - 4
RC FIN DETAILS (TOILET)

SCALE 1:20

0 0.1 0.2 0.4 0.6 0.8 1

NOTE:-
FLOOR TO FLOOR HEIGHT VARIES AND WILL BE SUBJECTED TO CHANGES

PHYSICAL FACILITIES DEVELOPMENT SECTION
MINISTRY OF EDUCATION,
REPUBLIC OF MALDIVES

PROJECT:
08 CLASSROOM AT
R.UNGOOFAARU SCHOOL

PROJECT REFERENCE

CLIENT: MINISTRY OF EDUCATION

SCALE : AS GIVEN

ARCHITECT :

ENGINEER :

DRAWN :

CHECKED :

DATE : 16.11.2021

DWG NO : A 18/ 20

AMMENDMENTS.

Issue	Date	Description

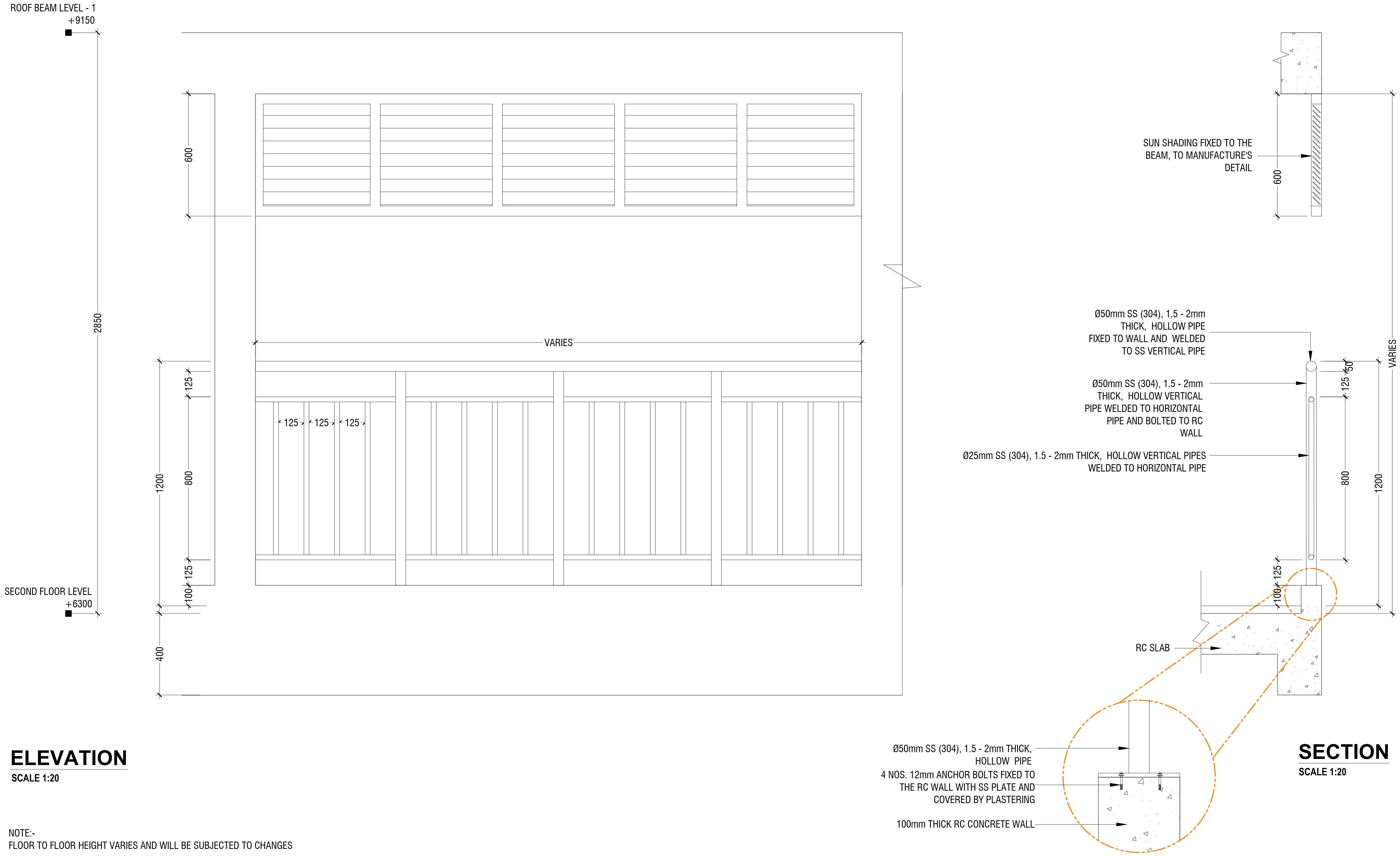
ROOF BEAM LEVEL - 1
+9150
2850
600
1200
125
800
125
100
400
VARIES
125
125
125
SECOND FLOOR LEVEL
+6300
SUN SHADING FIXED TO THE BEAM, TO MANUFACTURE'S DETAIL
600
Ø50mm SS (304), 1.5 - 2mm THICK, HOLLOW PIPE FIXED TO WALL AND WELDED TO SS VERTICAL PIPE
Ø50mm SS (304), 1.5 - 2mm THICK, HOLLOW VERTICAL PIPE WELDED TO HORIZONTAL PIPE AND BOLTED TO RC WALL
Ø25mm SS (304), 1.5 - 2mm THICK, HOLLOW VERTICAL PIPES WELDED TO HORIZONTAL PIPE
VARIES
50
125
800
1200
125
100
RC SLAB
Ø50mm SS (304), 1.5 - 2mm THICK, HOLLOW PIPE
4 NOS. 12mm ANCHOR BOLTS FIXED TO THE RC WALL WITH SS PLATE AND COVERED BY PLASTERING
100mm THICK RC CONCRETE WALL

ELEVATION
SCALE 1:20

SECTION
SCALE 1:20

NOTE:-
FLOOR TO FLOOR HEIGHT VARIES AND WILL BE SUBJECTED TO CHANGES

DETAIL - 5
RAILING DETAILS

SCALE 1:20

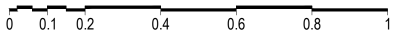
0
0.1
0.2
0.4
0.6
0.8
1

PHYSICAL FACILITIES DEVELOPMENT SECTION MINISTRY OF EDUCATION, REPUBLIC OF MALDIVES	PROJECT: 08 CLASSROOM AT R.UNGOOFAARU SCHOOL	ARCHITECT :
		ENGINEER :
		DRAWN :
	PROJECT REFERENCE	CHECKED :
	CLIENT: MINISTRY OF EDUCATION	DATE : 16.11.2021
	SCALE : AS GIVEN	DWG NO : A 19/ 20

AMMENDMENTS.		
Issue	Date	Description

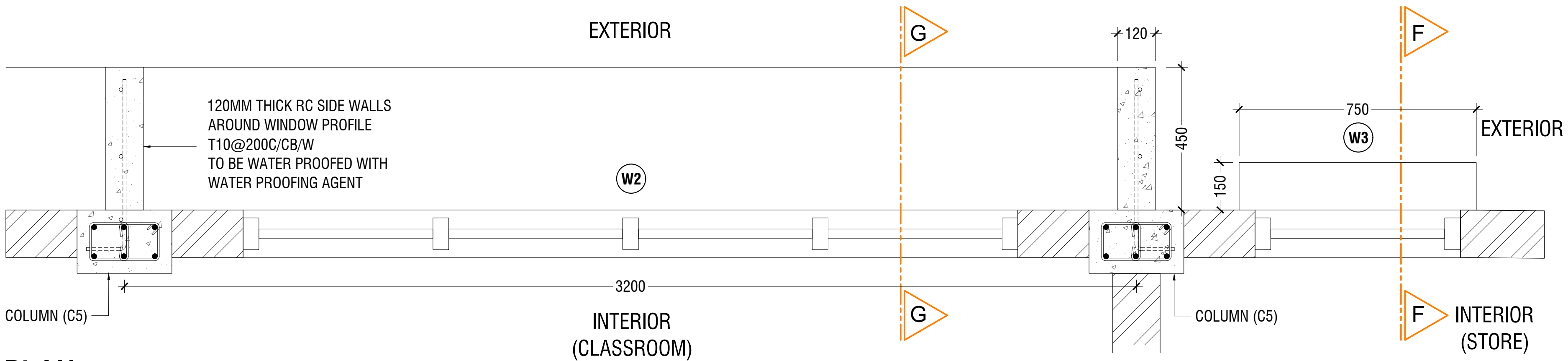
EXTERIOR
G
120
120MM THICK RC SIDE WALLS
AROUND WINDOW PROFILE
T10@200C/CB/W
TO BE WATER PROOFED WITH
WATER PROOFING AGENT
450
750
W3
EXTERIOR
150
W2
3200
COLUMN (C5)
INTERIOR
(CLASSROOM)
G
COLUMN (C5)
F
F
INTERIOR
(STORE)

PLAN

SCALE 1:20

0 0.1 0.2 0.4 0.6 0.8 1

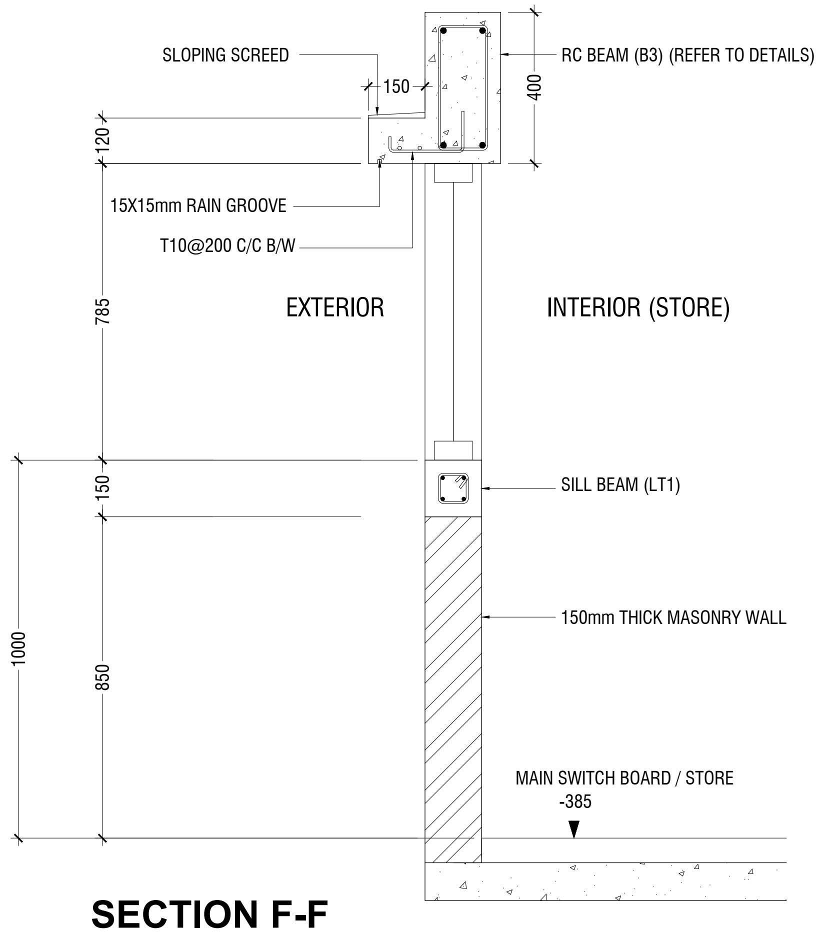
SLOPING SCREED
150
RC BEAM (B3) (REFER TO DETAILS)
400
120
15X15mm RAIN GROOVE
T10@200 C/C B/W
EXTERIOR
INTERIOR (STORE)
785
150
SILL BEAM (LT1)
1000
850
150mm THICK MASONRY WALL
MAIN SWITCH BOARD / STORE
-385

SECTION F-F

SCALE 1:20

0 0.1 0.2 0.4 0.6 0.8 1

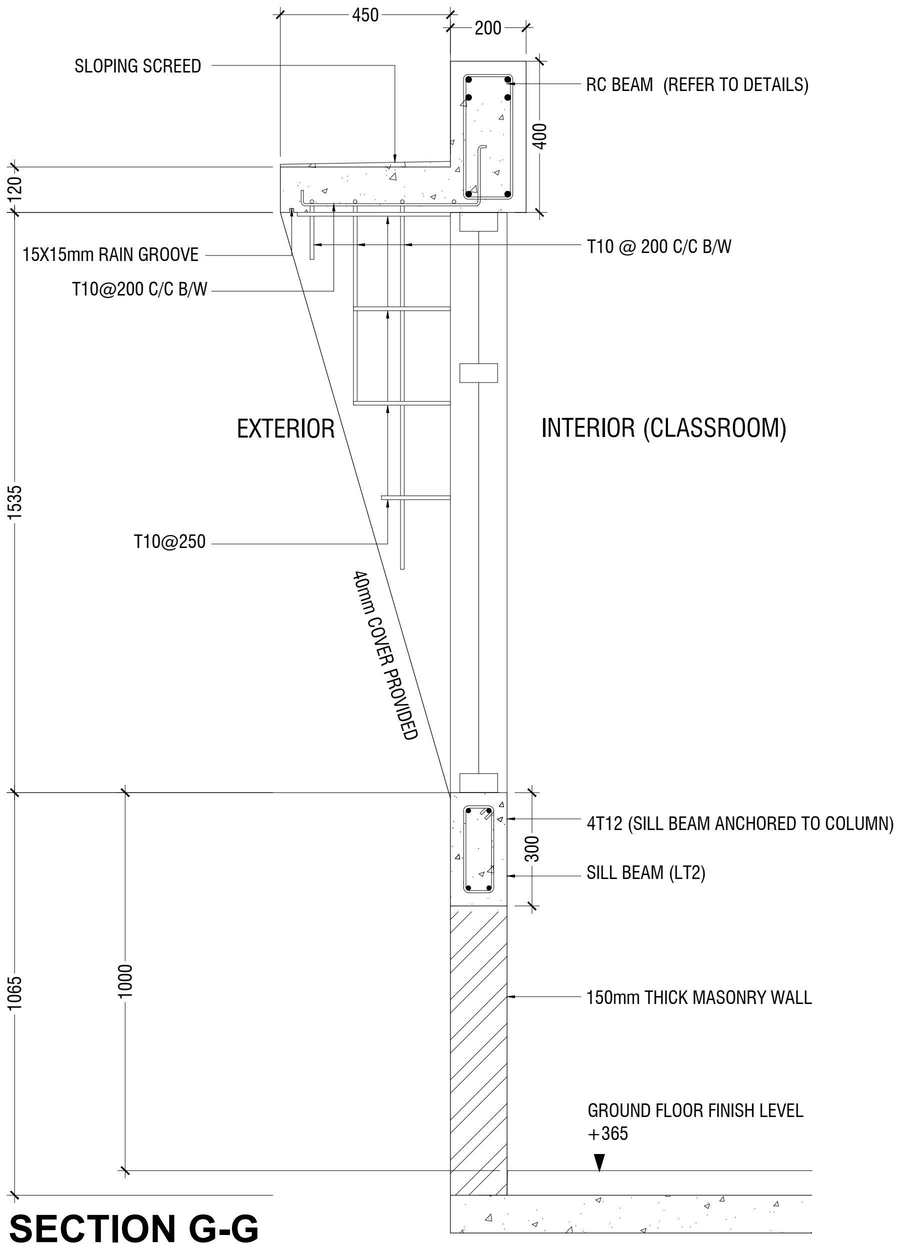
450
200
SLOPING SCREED
RC BEAM (REFER TO DETAILS)
400
120
15X15mm RAIN GROOVE
T10@200 C/C B/W
T10 @ 200 C/C B/W
EXTERIOR
INTERIOR (CLASSROOM)
1535
T10@250
40mm COVER PROVIDED
4T12 (SILL BEAM ANCHORED TO COLUMN)
300
SILL BEAM (LT2)
1065
1000
150mm THICK MASONRY WALL
GROUND FLOOR FINISH LEVEL
+365

SECTION G-G

SCALE 1:20

0 0.1 0.2 0.4 0.6 0.8 1

*** NOTE: GROUND FLOOR**

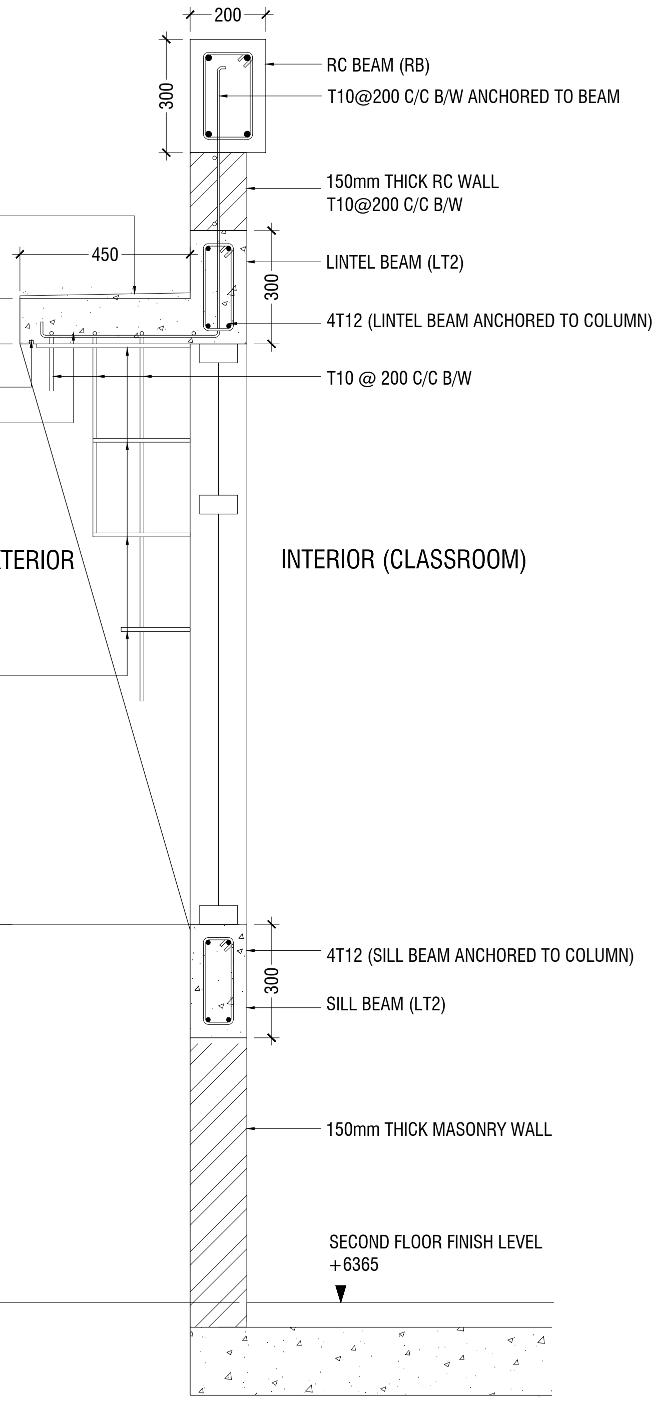
200
RC BEAM (RB)
300
T10@200 C/C B/W ANCHORED TO BEAM
150mm THICK RC WALL
T10@200 C/C B/W
SLOPING SCREED
450
LINTEL BEAM (LT2)
300
4T12 (LINTEL BEAM ANCHORED TO COLUMN)
120
15X15mm RAIN GROOVE
T10@200 C/C B/W
T10 @ 200 C/C B/W
EXTERIOR
INTERIOR (CLASSROOM)
1535
T10@250
4T12 (SILL BEAM ANCHORED TO COLUMN)
300
SILL BEAM (LT2)
1000
150mm THICK MASONRY WALL
SECOND FLOOR FINISH LEVEL
+6365

SECTION G-G

SCALE 1:20

0 0.1 0.2 0.4 0.6 0.8 1

*** NOTE: SECOND FLOOR**

DETAIL - 6
RC WALL DETAILS

SCALE 1:20

0 0.1 0.2 0.4 0.6 0.8 1

PHYSICAL FACILITIES DEVELOPMENT SECTION
MINISTRY OF EDUCATION,
REPUBLIC OF MALDIVES

PROJECT:
08 CLASSROOM AT
R.UNGOOFAARU SCHOOL

PROJECT REFERENCE

CLIENT: MINISTRY OF EDUCATION

SCALE : AS GIVEN

ARCHITECT :

ENGINEER :

DRAWN :

CHECKED :

DATE : 16.11.2021

DWG NO : A 20/ 20

AMMENDMENTS.

Issue	Date	Description

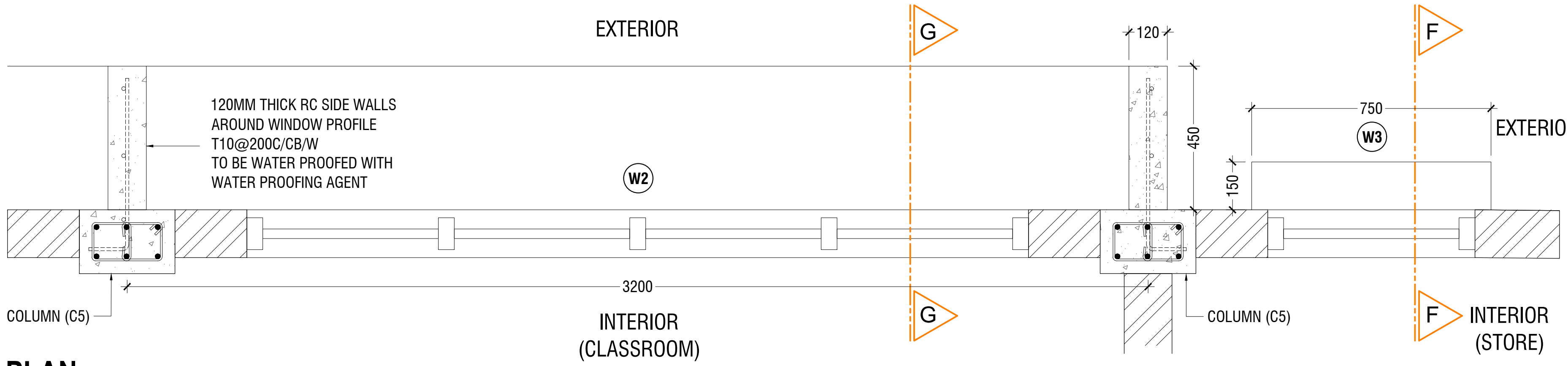
EXTERIOR
G
120
F
750
EXTERIOR
W3
450
150
120MM THICK RC SIDE WALLS
AROUND WINDOW PROFILE
T10@200C/CB/W
TO BE WATER PROOFED WITH
WATER PROOFING AGENT
W2
3200
COLUMN (C5)
INTERIOR
(CLASSROOM)
G
COLUMN (C5)
F
INTERIOR
(STORE)

PLAN

SCALE 1:20

0 0.1 0.2 0.4 0.6 0.8 1

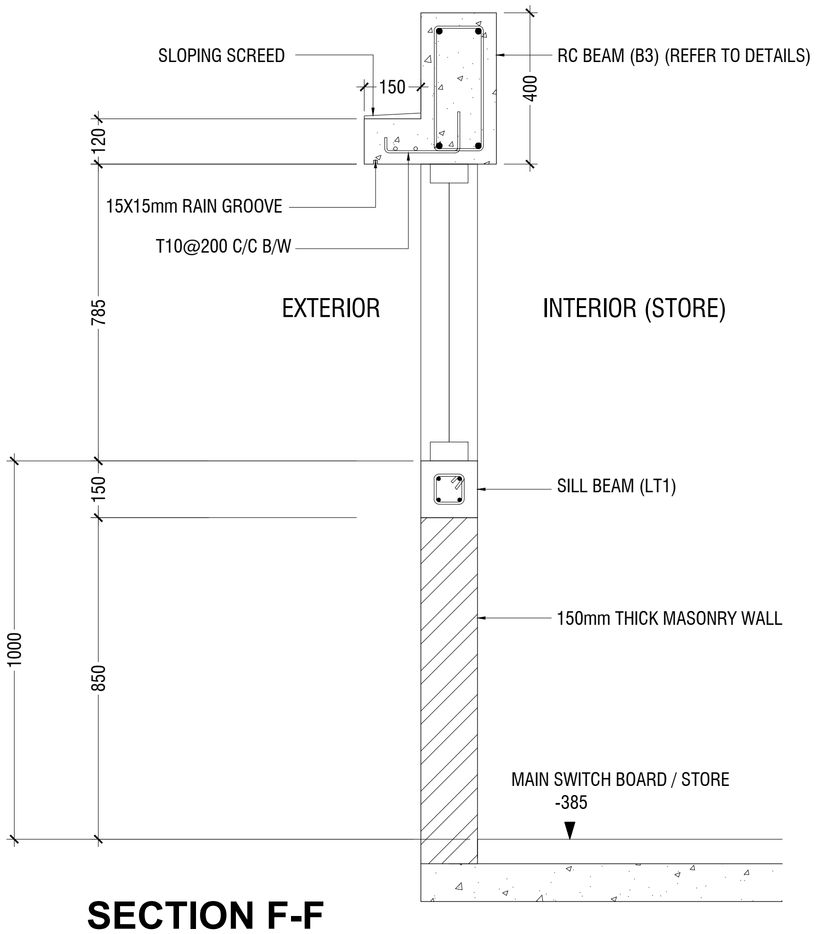
SLOPING SCREED
150
RC BEAM (B3) (REFER TO DETAILS)
400
120
15X15mm RAIN GROOVE
T10@200 C/C B/W
785
EXTERIOR
INTERIOR (STORE)
150
SILL BEAM (LT1)
1000
850
150mm THICK MASONRY WALL
MAIN SWITCH BOARD / STORE
-385

SECTION F-F

SCALE 1:20

0 0.1 0.2 0.4 0.6 0.8 1

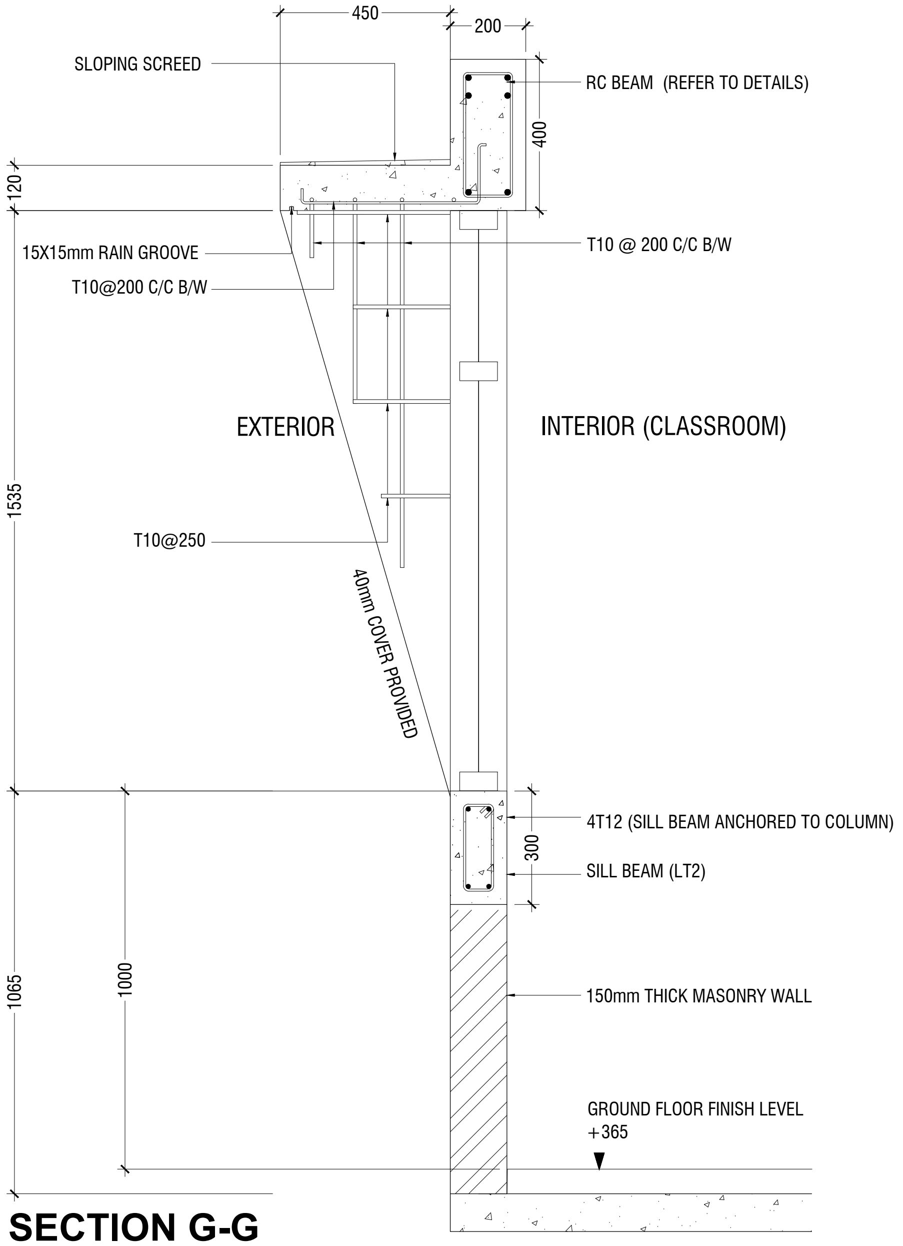
450
200
SLOPING SCREED
RC BEAM (REFER TO DETAILS)
400
120
15X15mm RAIN GROOVE
T10@200 C/C B/W
T10 @ 200 C/C B/W
EXTERIOR
INTERIOR (CLASSROOM)
1535
T10@250
40mm COVER PROVIDED
4T12 (SILL BEAM ANCHORED TO COLUMN)
300
SILL BEAM (LT2)
1065
1000
150mm THICK MASONRY WALL
GROUND FLOOR FINISH LEVEL
+365

SECTION G-G

SCALE 1:20

0 0.1 0.2 0.4 0.6 0.8 1

*** NOTE: GROUND FLOOR**

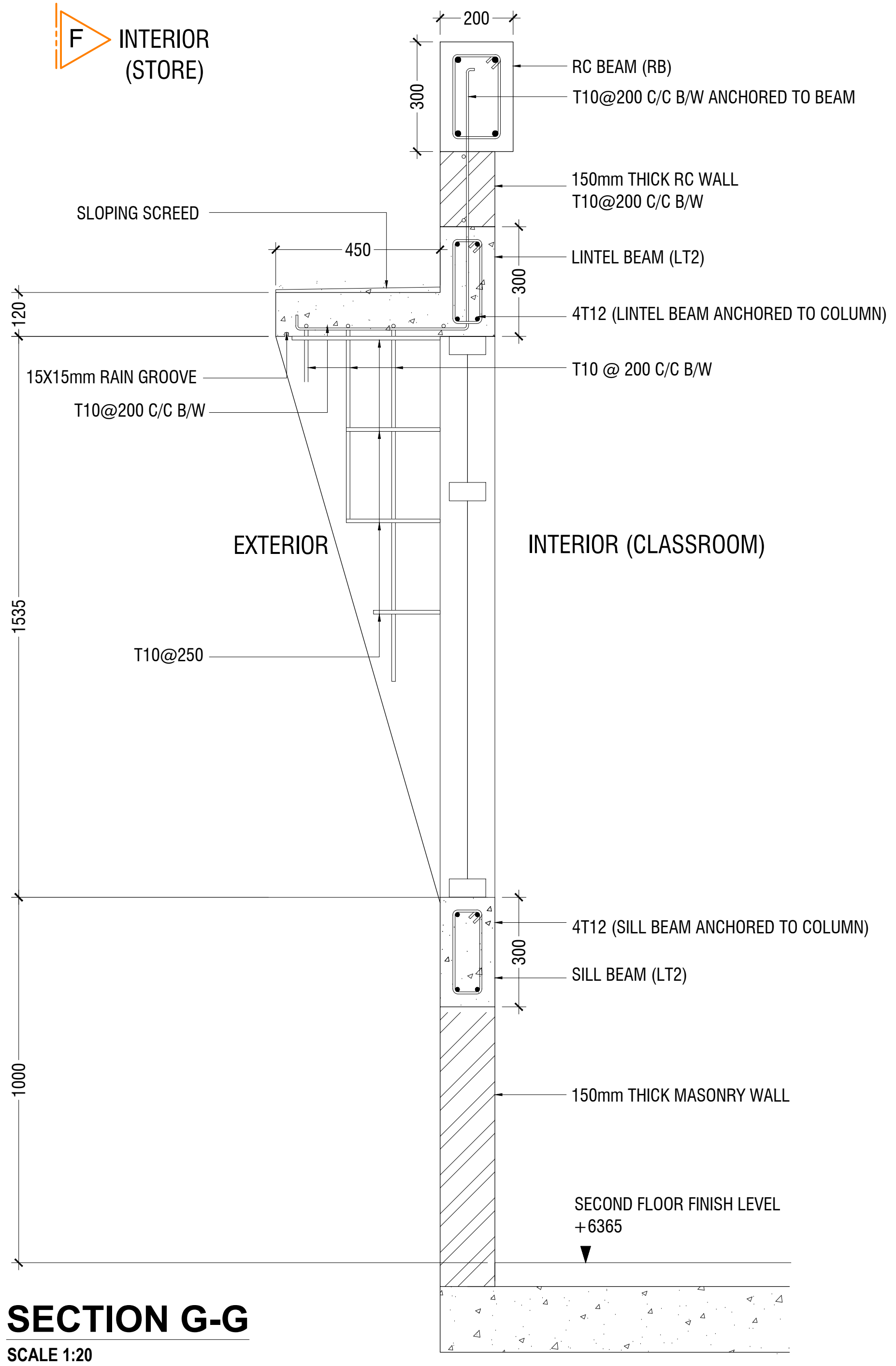
200
RC BEAM (RB)
300
T10@200 C/C B/W ANCHORED TO BEAM
150mm THICK RC WALL
T10@200 C/C B/W
SLOPING SCREED
450
LINTEL BEAM (LT2)
300
4T12 (LINTEL BEAM ANCHORED TO COLUMN)
120
15X15mm RAIN GROOVE
T10@200 C/C B/W
T10 @ 200 C/C B/W
EXTERIOR
INTERIOR (CLASSROOM)
1535
T10@250
4T12 (SILL BEAM ANCHORED TO COLUMN)
300
SILL BEAM (LT2)
1000
150mm THICK MASONRY WALL
SECOND FLOOR FINISH LEVEL
+6365

SECTION G-G

SCALE 1:20

0 0.1 0.2 0.4 0.6 0.8 1

*** NOTE: SECOND FLOOR**

DETAIL - 6
RC WALL DETAILS

SCALE 1:20

0 0.1 0.2 0.4 0.6 0.8 1

PHYSICAL FACILITIES DEVELOPMENT SECTION MINISTRY OF EDUCATION, REPUBLIC OF MALDIVES	PROJECT: 08 CLASSROOM AT R.UNGOOFAARU SCHOOL	ARCHITECT :
		ENGINEER :
		DRAWN :
	PROJECT REFERENCE	CHECKED :
	CLIENT: MINISTRY OF EDUCATION	DATE : 16.11.2021
	SCALE : AS GIVEN	DWG NO : A 20/ 20

AMMENDMENTS.

Issue	Date	Description

GENERAL NOTES

THE GENERAL NOTES SHALL BE READ IN CONJUNCTION WITH THE CONTRACT SPECIFICATIONS AND DRAWINGS.
REGARDLESS OF WHETHER OR NOT SHOWN IN DRAWINGS OR OTHER TENDER DOCUMENTS, THE STANDARD PROVISIONS SPECIFIED HEREUNDER FOR COMPLIANCE BY THE CONTRACTOR SHALL APPLY TO ALL RELEVANT PORTIONS OF THE STRUCTURAL WORKS AND SHALL FORM PART OF THIS CONTRACT.

1.0 VERIFICATION OF DIMENSIONS AND LEVELS

- THE CONTRACTOR SHALL VERIFY ALL DIMENSIONS AND LEVELS ON SITE, AND RESOLVE ALL DISCREPANCIES WITH THE ARCHITECT OR ENGINEER PRIOR TO COMMENCEMENT OF WORK.
- DRAWING INDICATES GENERAL & TYPICAL DETAILS OF CONSTRUCTION. WHERE CONDITIONS ARE OF SIMILAR CHARACTER TO DETAILS SHOWN AND ALTHOUGH NOT SPECIFICALLY INDICATED, SIMILAR DETAILS OF CONSTRUCTION SHALL BE USED SUBJECTED TO REVIEW BY THE ENGINEER.
- PRIOR TO COMMENCEMENT OF WORKS, THE CONTRACTOR SHALL VERIFY ALL DIMENSIONS AND LEVELS IN THE CONTRACT DRAWINGS.
- DISCREPANCIES IN DRAWINGS ARISING FROM SUCH VERIFICATION WORKS SHALL BE BROUGHT TO THE ATTENTION OF THE ARCHITECT/ENGINEER.

2.0 SHOP DRAWINGS

- THE CONTRACTOR SHALL BE SOLELY RESPONSIBLE FOR ENSURING TOTAL COORDINATION OF ALL WORKS AND SHALL TAKE SITE MEASUREMENTS PRIOR TO THE PREPARATION OF ANY SHOP DRAWINGS OR BEFORE COMMENCING FABRICATION.
- THE CONTRACTOR SHALL SUBMIT SHOP DRAWINGS FOR ALL SPECIALIST TRADES, SUCH AS PRESTRESSING, CURTAIN WALLING, ETC. FOR REVIEWS AND COMMENTS BY THE ARCHITECT/ENGINEER PRIOR TO COMMENCEMENT OF WORK. SUCH SHOP DRAWINGS SUBMITTED SHALL INCORPORATE ALL NECESSARY CONNECTION DETAILS TO THE STRUCTURAL MEMBERS SUCH AS CAST-IN INSERTS, EMBEDDED PLATES, ETC.

3.0 INCORPORATION OF M&E REQUIREMENTS IN THE STRUCTURE

- THE CONTRACTOR SHALL BE SOLELY RESPONSIBLE FOR ENSURING TOTAL COORDINATION OF STRUCTURAL, M & E PENETRATION DRAWINGS OF SERVICES AND SUBMIT SUCH SHOP DRAWINGS TO THE ARCHITECT/ENGINEER FOR REVIEWS AND APPROVAL PRIOR TO COMMENCEMENT OF WORK.
- THESE SHOP DRAWINGS SHALL INCORPORATE ALL MECHANICAL, ELECTRICAL AND SANITARY WORKS TO BE EMBEDDED IN CONCRETE AND ALL OPENINGS FOR ALL PIPE OR DUCT WORKS, BASED ON THE REQUIREMENTS OF M & E DRAWINGS IN HIS POSSESSION.
- HE SHALL CHECK AND RESOLVE ALL DISCREPANCIES WITH THE RESPECTIVE ENGINEER PRIOR TO PLACEMENT OF CONCRETE.

4.0 LEAN CONCRETE FOR SUSPENDED STRUCTURES

- UNLESS OTHERWISE STATED, 50 MM THICK LEAN CONCRETE WITH A MINIMUM 28-DAY CUBE STRENGTH OF 15N/MM2 SHALL BE PROVIDED ON ALL SOIL SURFACES FORMING THE UNDERSIDE OF STRUCTURAL CONCRETE MEMBERS.

5.0 STRUCTURAL ELEMENTS ON GRADE

- UNLESS OTHERWISE STATED, A SINGLE LAYER OF 0.25 MM(HEAVY DUTY) POLYTHENE SHEET, OR EQUIVALENT THERMOPLASTIC MATERIAL, LAID OVER A COMPACTED 60 MM THICK LAYER OF HARD CORE BLINDED WITH SAND TO PREVENT GROUT LOSS FROM SEEPAGE INTO THE GROUND SHALL BE PROVIDED ON ALL SOIL SURFACES FORMING THE UNDERSIDE OF THE NON-SUSPENDED SLABS.

6.0 SUBGRADE UNDER STRUCTURAL ELEMENTS

- WHERE THE CONTRACTOR REQUIRES REMOVAL AND SUBSEQUENT BACKFILL OF SUBGRADE PRIOR TO CASTING OF PILECAP/WALL/BEAM/SLAB, HE SHALL ENSURE THAT THE BACKFILL IS OF APPROVED MATERIAL AND THAT THE BACKFILL SHALL BE REASONABLY COMPACTED TO ENSURE THAT THE COMPACTED SOIL IS ABLE TO WITHSTAND THE WEIGHT OF THE WET CONCRETE. THE CONTRACTOR SHALL EXERCISE PROPER SKILL AND CARE TO AVOID DAMAGE TO ADJACENT INSTALLED STRUCTURES ARISING FROM HIS CONSTRUCTION SEQUENCE.

7.0 WATERPROOFING FOR STRUCTURES

- THE CONTRACTOR SHALL SUBMIT SHOP DRAWINGS AND METHOD STATEMENTS FOR THE ENGINEER'S APPROVAL PRIOR TO COMMENCEMENT OF WORK. REQUIRED SHOP DRAWING DETAILS INCLUDE BUT ARE NOT LIMITED TO TREATMENT OF FLASHINGS, WATERSTOP AT CONSTRUCTION JOINTS, WALL AND SLAB PENETRATIONS.
- ALL PENETRATIONS THROUGH STRUCTURAL ELEMENTS SHALL BE CAST-IN, SLEEVED AND PROVIDED WITH APPROVED PUDDLE FLANGE DETAIL. IF FOR ANY REASON THE CONTRACTOR IS UNABLE TO LAY WATERSTOP AT CONSTRUCTION JOINTS AS INDICATED IN THE DRAWINGS, HE SHALL AT HIS OWN EXPENSES PROVIDE ADEQUATE GROUT TUBES FOR WATERPROOF PRESSURE GROUTING TO ENSURE WATERTIGHTNESS OF THE JOINT.
- ALL GROUT TUBES SHALL BE MARKED AND PROTECTED FROM BLOCKAGE.
- BACKFILLING OPERATIONS AGAINST VERTICAL SURFACE SHALL BE CARRIED OUT AS SOON AS THE WATERPROOFING BARRIER IS INSTALLED TO THE SATISFACTION OF THE ENGINEER.

8.0 CASTING LAYERS

- INCLINED CASTING LAYERS AND INCLINED CONSTRUCTION JOINTS SHALL BE AVOIDED.
- HORIZONTAL CASTING LAYERS SHALL NOT IN GENERAL EXCEED 0.6 M THICKNESS UNLESS OTHERWISE APPROVED BY THE ENGINEER.

9.0 FOUNDATIONS

- ALL FOUNDATIONS HAS BEEN DESIGNED FOR SAFE GROUND PRESSURE OF 150 KN/M.
- ALL BACKFILL SHOULD BE DONE WITH MATERIALS APPROVED BY THE CONSULTANT AND SOURCE. ALL BACKFILL SHOULD BE STRUCTURAL FILL, COMPACTED IN LAYERS AS SPECIFIED.
- WEAK POCKETS FOUND BELOW THE ASSUMED FOUNDATION LEVELS SHALL BE REMOVED AND REPLACED BY PLAIN CONCRETE.
- IN CASE OF EXCAVATIONS BELOW THE ASSUMED LEVEL OF THE FOUNDATION, THE SOIL SHALL BE REPLACED BY PLAIN CONCRETE.
- IN CASE GROUND WATER IS PRESENT ABOVE FOUNDATION LEVEL, THE CONTRACTOR SHALL BE RESPONSIBLE FOR DEWATERING THE BELOW LEVEL OF FOUNDATIONS.
- THE CONTRACTOR SHALL MAINTAIN DRY WORKING CONDITIONS THROUGH OUT THE CONSTRUCTION PERIOD. RESTORING WATER TABLE CAN BE DONE AFTER BACKFILLING AND COMPACTION UP TO THE SLAB ON GRADE LEVEL, OR AS DIRECTED BY THE ENGINEER.
- NO BACK FILLING SHALL BE PLACED AGAINST WALLS RETAINING EARTH, UNLESS THE WALLS ACHIEVE SUFFICIENT STRENGTH TO PREVENT MOVEMENT OR STRUCTURAL DAMAGE.

10.0 CONSTRUCTION LOAD AND SHORING

- CONSTRUCTION LIVE LOAD IMPOSED ON ANY SINGLE FLOOR SHALL NOT EXCEED 1.5 KN/M2. UNLESS OTHERWISE APPROVED BY THE ENGINEER, DEAD LOAD OF THE TOP CONSTRUCTION FLOOR SHALL BE SUPPORTED BY TWO COMPLETED FLOORS DIRECTLY BELOW IT.
- PROPS TO BEAMS AND SLABS AT ANY FLOORS SHALL NOT BE REMOVED UNTIL THE TWO IMMEDIATE FLOORS ABOVE THAT LEVEL ARE CAPABLE OF SUPPORTING THEMSELVES AS WELL AS ANY LOADS IMPOSED DURING CONSTRUCTION. CONSIDERATIONS GOVERNING REMOVAL OF PROPS INCLUDE BUT ARE NOT LIMITED TO THE ATTAINMENT OF 28-DAY STRENGTH FOR THE CONCRETE, DESIGN LOAD CAPACITY OF THE FLOOR UNDER REVIEW AND THE COMPLETION OF PRESTRESSING AND GROUTING OPERATIONS IN THE CASE OF A PRESTRESSED STRUCTURAL FLOOR SYSTEM.
- PROPS SHALL BE LEFT IN PLACE FOR SUPPORTING THE CONSTRUCTION LOADS APPROVED BY THE ENGINEER.
- NO ALLOWANCE HAS BEEN MADE IN THE DESIGN OF THE PERIMETER BEAMS/WALLS FOR THE SUPPORT OF TEMPORARY SCAFFOLDINGS.
- THE CONTRACTER SHALL ENGAGE HIS OWN PROFESSIONAL ENGINEER TO DESIGN AND STRENGTHEN THE BEAMS/WALLS.
- THE CONTRACTER SHALL ENGAGE HIS OWN PROFESSIONAL ENGINEER CHECK THE ADEQUACY OF SHORING DETAIL PROVIDED PROCEEDING THE WORK, AS SHORING WAS DESIGNED, CONSIDERING THE STATUS OF THE BUILDING AT THE TIME OF DESIGN.

11.0 CONCRETE COVER

- MINIMUM COVER TO OUTERMOST REINFORCEMENT INCLUDING LINKS SHALL BE AS FOLLOWS.

STRUCTURAL ELEMENT	COVER (mm)
RAFT BEAM & SLAB (EARTH FACE)	60
RAFT BEAM & SLAB (INTERNAL FACE)	60
COLUMN	40
BEAM	35
BEAM (EXTERNAL FACE)	40
SLAB	30
INTERNAL WALL	30
EXTERNAL WALL	40

- NOTE: EARTH FACE COVER OF BEAMS, COLUMNS & WALLS SHOULD BE 50mm

12.0 MATERIAL STRENGTHS

12.1 CONCRETE

- UNLESS OTHERWISE STATED, ORDINARY PORTLAND CEMENT CONFORMING TO BS 12, TO BE USED FOR ALL THE RC STRUCTURAL ELEMENTS.
- THE MINIMUM 28-DAY COMPRESSIVE CUBE STRENGTH OF CONCRETE FOR SPECIFIED STRUCTURAL ELEMENTS SHALL BE AS FOLLOWS UNLESS OTHERWISE STATED:

MAIN BUILDING	
LEAN CONCRETE	15 N/mm2
MASS CONCRETE	30 N/mm2
COLUMN, BEAM AND SLAB	30 N/mm2
EXTERNAL WORK	
PAVEMENTS	30 N/mm2
ALL OTHERS (CULVERT, DRAINS, MANHOLE, ETC)	30 N/mm2
FOUNDATION	
PILECAP, FOOTING, RAFT TIE-BEAM, CAPPING BEAM	30 N/mm2

- CEMENT SHALL BE ORDINARY PORTLAND CEMENT TO BS 12.

12.2 REINFORCEMENT

- UNLESS OTHERWISE STATED, BAR SIZE 10MM DIAMETER OR LARGER SHALL BE HIGH TENSILE TYPE II DEFORMED BARS. THE MINIMUM YIELD STRENGTH OF STEEL BAR REINFORCEMENT SHALL BE AS FOLLOWS:

MILD STEEL PLAIN BAR	250 N/mm2
HIGH TENSILE TYPE II DEFORMED BAR	415 N/mm2

12.25 REINFORCEMENT ANCHORAGE OR LAPPING IS AS FOLLOWS U.N.O.

	BAR GRADE 415
TENSION	45Ø
COMPRESSION	45Ø

Ø IS DIAMETER OF THE SMALLER SIZED LAPPED BAR.

- NO SPLICE SHALL BE MADE AT POINT OF MAXIMUM STRESS,EG IN BEAMS AND SLABS, THERE SHALL BE NO SPLICING OF TOP BARS OVER SUPPORTS NOR BOTTOM BARS AT MID-SPANS. SPLICES SHALL BE STAGGERED WHEREVER POSSIBLE. LAP LENGTH FOR UNEQUAL SIZE BARS (OR WIRES IN FABRIC) MAY BE BASED UPON THE SMALLER BAR. FOR BUNDLED BARS, THE EQUIVALENT DIAMETER SHALL BE USED. CRANKING OF BARS SHALL NOT EXCEED A SLOPE OF 1:10.
- FOR LAP LENGTH, WHERE SYMBOLS ARE NOT INDICATED, THE TENSION LAP LENGTH SHALL BE FOLLOWED.

13.0 STIRRUPS, LINKS AND TIES

- ALL STIRRUPS, LINKS AND TIES IN BEAMS, COLUMNS AND WALLS RESPECTIVELY SHALL TERMINATE NOT MORE THAN 75mm FROM THE FACE OF ANY ADJACENT STRUCTURAL MEMBERS.

14.0 SLAB DISTRIBUTION BARS

- REGARDLESS OF WHETHER OR NOT SHOWN ON PLAN, ALL DISTRIBUTION BARS FOR SLAB SHALL COMPRISE TYPICALLY ONE OF THE FOLLOWING COMBINATIONS, UNLESS OTHERWISE STATED IN THE RELEVANT DRAWINGS :

SLAB THICKNESS (mm)	MIN. DISTRIBUTION BAR
250 OR LESS	T10-300
GREATER THAN 250 BUT LESS THAN OR EQUAL TO 300	T10-200
GREATER THAN 300 BUT LESS THAN OR EQUAL TO 400	T10-150

15.0 FLOOR RENDERING

- THICKNESS OF SCREED RENDERING/MASS CONCRETE TOPPING EXCEEDING 60 OR MORE SHALL BE REINFORCED WITH ONE LAYER OF R6.

16.0 SHRINKAGE CRACKS

- THE SURFACE OF CONCRETE SHALL BE ADEQUATELY AND CONTINUOUSLY CURED TO SPECIFICATION TO PREVENT FORMATION OF SHRINKAGE CRACKS.THOUGH SHRINKAGE CRACKS HAVE NO EFFECT ON THE STRENGTH AND INTEGRITY OF THE STRUCTURE,THEY SHOULD BE SEALED BY EPOXY PRESSURE GROUTING. ALL COST INCURRED FOR THE NECESSARY SEALING UP OF SHRINKAGE CRACKS BY EPOXY PRESSURE GROUTING SHALL BE DEEMED TO BE INCLUDED IN THE CONCRETE WORK AS TENDERED.

17.0 STEEL BAR CORROSION PROTECTION

- ALL EXPOSED BARS FOR FUTURE CONSTRUCTION PURPOSES (EXCEEDING 3 MONTHS) MUST BE COATED WITH MASTER EMACO 8100 AP OR APPROVED EQUIVALENT AND PROVIDED WITH ADEQUATE MAINTENANCE.

18.0 SPACER BARS

- ALL SPACER BARS BETWEEN 2 OR MORE LAYERS OF REINFORCEMENT SHALL T25 OR BAR DIAMETER (WHICHEVER IS GREATER) AT ±1-5M C/C.

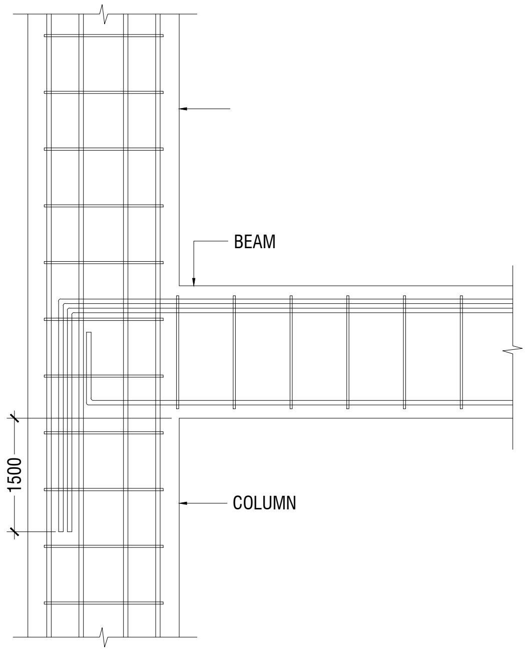

BEAM TO COLUMN CONNECTION

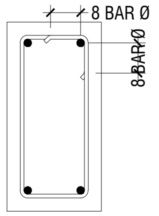

Ø = DIA OF LINK

SHEAR LINKS ANCHORAGE DETAIL

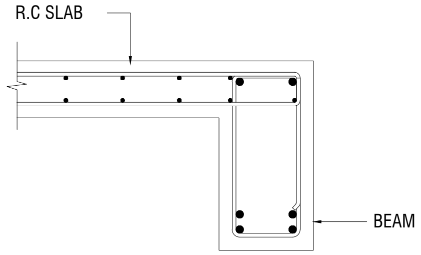

SLAB-BEAM ANCHORAGE DETAIL

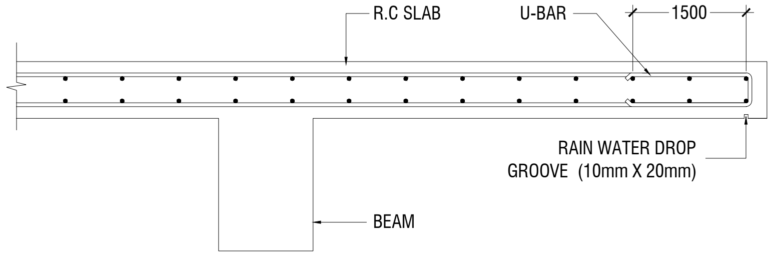

CANTILEVERED SLAB EDGE DETAIL

19.0 STRUCTURAL TIMBER SPECIFICATION

19.1 THE CONTRACT STRUCTURAL DRAWINGS AND SPECIFICATIONS REPRESENT THE COMPLETED STRUCTURE, AND ARE NOT INTENDED TO INDICATE THE METHOD OR MEANS OF CONSTRUCTION. THE CONTRACTOR SHALL SUPERVISE AND DIRECT THE WORK AND SHALL BE SOLELY RESPONSIBLE FOR ALL CONSTRUCTION MEANS, METHODS, PROCEDURES, TECHNIQUES, SEQUENCES, AND FOR JOB SAFETY.

19.2 THE ENGINEER DOES NOT HAVE CONTROL OR CHARGE OF, AND SHALL NOT BE RESPONSIBLE FOR, CONSTRUCTION MEANS, METHODS, TECHNIQUES, SEQUENCES, OR PROCEDURES, FOR SAFETY PRECAUTIONS AND PROGRAMS IN CONNECTION WITH THE WORK, FOR THE ACTS OR OMISSIONS OF THE CONTRACTOR, SUBCONTRACTOR, OR ANY OTHER PERSONS PERFORMING ANY OF THE WORK, OR FOR THE FAILURE OF ANY OF THEM TO CARRY OUT THE WORK IN ACCORDANCE WITH THE CONTRACT DOCUMENTS.

19.3 ALL CONSTRUCTION IS IN COMPLIANCE WITH THE CONSTRUCTION DOCUMENTS. THE GENERAL CONTRACTOR SHALL BE RESPONSIBLE FOR PERFORMING ALL WORK IN COMPLIANCE WITH THE CONSTRUCTION DOCUMENTS.

19.4 ALL TIMBER FOR STRUCTURAL USE SHALL BE HARDWOOD OR SOFTWOOD OF VISUAL GRADE C/D IN ACCORDANCE WITH BS 5756 WITH THE FOLLOWING MINIMUM GRADE STRESSES:

19.5 CONNECTIONS
PLATES - STAINLESS STEEL GRADE 316 OF STATED THICKNESS
BOLTS - SS GRADE 316

19.6 TIMBER TREATMENT
MOISTURE - PRESSURE IMPREGNATION OF CCA
INSECTS - TERMITE TREATMENT FOR TIMBER IN / NEAR GROUND

20.0 STRUCTURAL STEEL SPECIFICATION

1. SEE 21.0 ON PRIMARY CODES AND SPECIFICATIONS.

2. MATERIALS:

W-SHAPES & WT-SHAPES	ASTM A992
S-SHAPES, M-SHAPES, HP-SHAPES	ASTM A36
ST-SHAPES & MT-SHAPES	ASTM A36
C-SHAPES & MC-SHAPES	ASTM A36
ANGLES & PLATES	ASTM A36
HSS SHAPES	ASTM A500, GRADE B
STEEL PIPE	ASTM A53 (TYPE E OR S), GRADE B
HIGH STRENGTH BOLTS	ASTM A325
MACHINE BOLTS	ASTM A307
ANCHOR RODS	ASTM F1554, GRADE 55 TYPE S1(UNO)
WELDED HEADED STUDS	ASTM A108
DEFORMED BAR ANCHORS	ASTM A496
WELDING ELECTRODES	AWS D1.1, E70 SERIES

3. NON-SHRINK, NON-METALLIC GROUT WITH A 28 DAY STRENGTH OF 35MPa SHALL BE USED UNDER BASE PLATES AND SHALL CONFORM TO BS EN 12390-3 AND EN 196-1. MASTERFLOW 542 OR EQUIVALENT MAYBE USED.

23.0 POST-INSTALLED ANCHORS

1. POST-INSTALLED ANCHORS SHALL ONLY BE USED WHERE SPECIFIED ON THE DRAWINGS. CONTRACTOR SHALL OBTAIN APPROVAL FROM ENGINEER OF RECORD (EOR) PRIOR TO USING POST-INSTALLED ANCHORS FOR MISSINGS OR MISPLACED ANCHORS.

2. CARE SHALL BE GIVEN TO AVOID CONFLICTS WITH EXISTING REINFORCING WHEN DRILLING HOLES. HOLES SHALL BE DRILLED AND CLEANED PER THE MANUFACTURER'S INSTRUCTIONS. ANCHORS SHALL BE INSTALLED PER THE MANUFACTURER'S INSTALLATION INSTRUCTIONS AT NOT LESS THAN MINIMUM EDGE DISTANCES AND/OR SPACINGS INDICATED IN THE MANUFACTURER'S LITERATURE.

3. SPECIAL INSPECTION SHALL BE PROVIDED FOR ALL ADHESIVE AND MECHANICAL ANCHOR INSTALLATIONS AS REQUIRED BY THE EOR. INDEPENDENT ON-SITE PROOF LOAD TESTING SHALL BE PERFORMED AS REQUIRED BY THE EOR. CONTACT EOR FOR NUMBER OF ANCHORS REQUIRED TO BE TESTED AND REQUIRED PROOF LOAD MAGNITUDE.

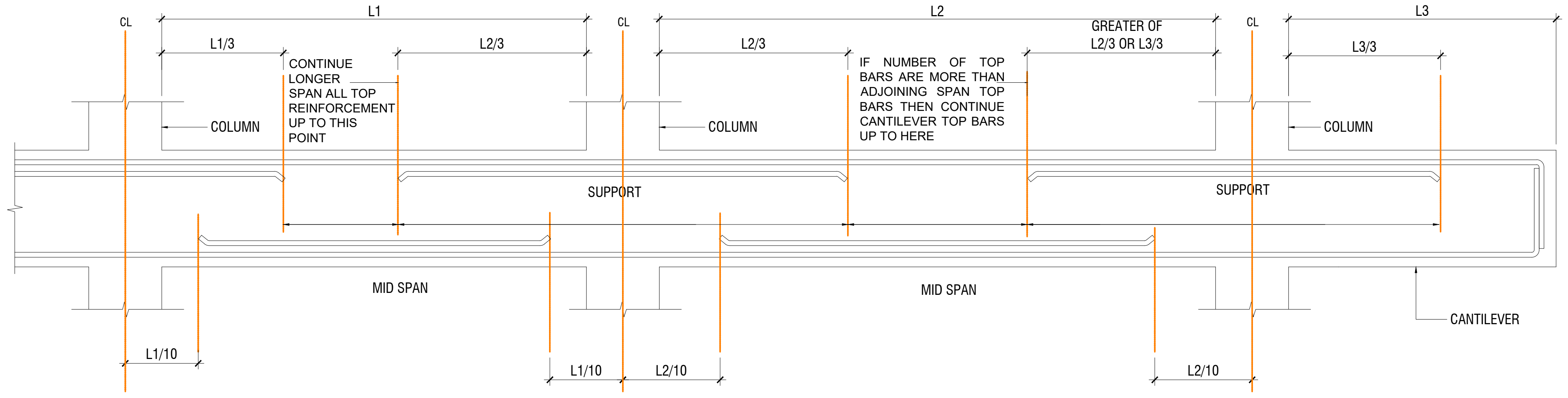
CL
L1
CL
L2
CL
L3
L1/3
L2/3
L2/3
GREATER OF
L2/3 OR L3/3
L3/3
CONTINUE
LONGER
SPAN ALL TOP
REINFORCEMENT
UP TO THIS
POINT
IF NUMBER OF TOP
BARS ARE MORE THAN
ADJOINING SPAN TOP
BARS THEN CONTINUE
CANTILEVER TOP BARS
UP TO HERE
COLUMN
COLUMN
COLUMN
SUPPORT
SUPPORT
MID SPAN
MID SPAN
CANTILEVER
L1/10
L1/10
L2/10
L2/10

SIMPLIFIED DETAILING RULES FOR BEAMS (BS8110-1)

L1 = SHORTER SPAN
L2 = LONGER SPAN
L3 = CANTILEVER LENGTH

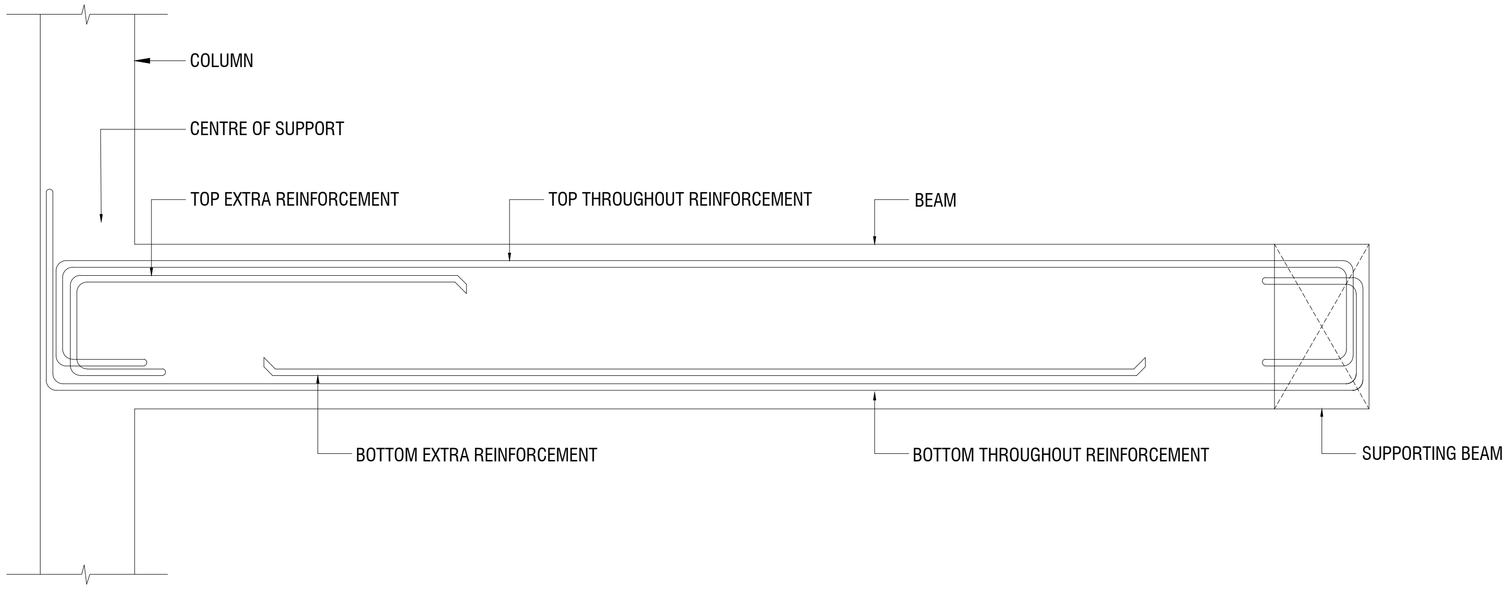
COLUMN
CENTRE OF SUPPORT
TOP EXTRA REINFORCEMENT
TOP THROUGHOUT REINFORCEMENT
BEAM
BOTTOM EXTRA REINFORCEMENT
BOTTOM THROUGHOUT REINFORCEMENT
SUPPORTING BEAM

LONGITUDINAL SECTION OF TYPICAL SLAB BEAM SPANNING BETWEEN A COLUMN AND BEAM
SHOWING END SPAN MID SPAN REINFORCEMENT DETAILS

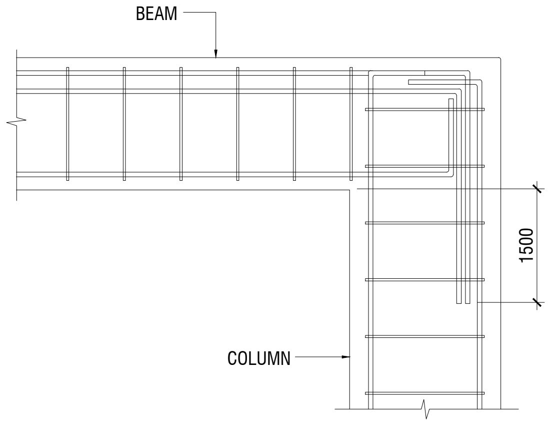
BEAM
1500
COLUMN

END COLUMN TO BEAM CONNECTION

NOTE:
STANDARD DETAILS GIVEN HERE ALSO APPLIES TO FOUNDATION MEMBERS
OTHER DETAILS NOT FOUND HERE SHALL BE REFEREED TO IN RELEVANT BS
CODES OR SHALL BE APPROVED BY CLIENT'S ENGINEER

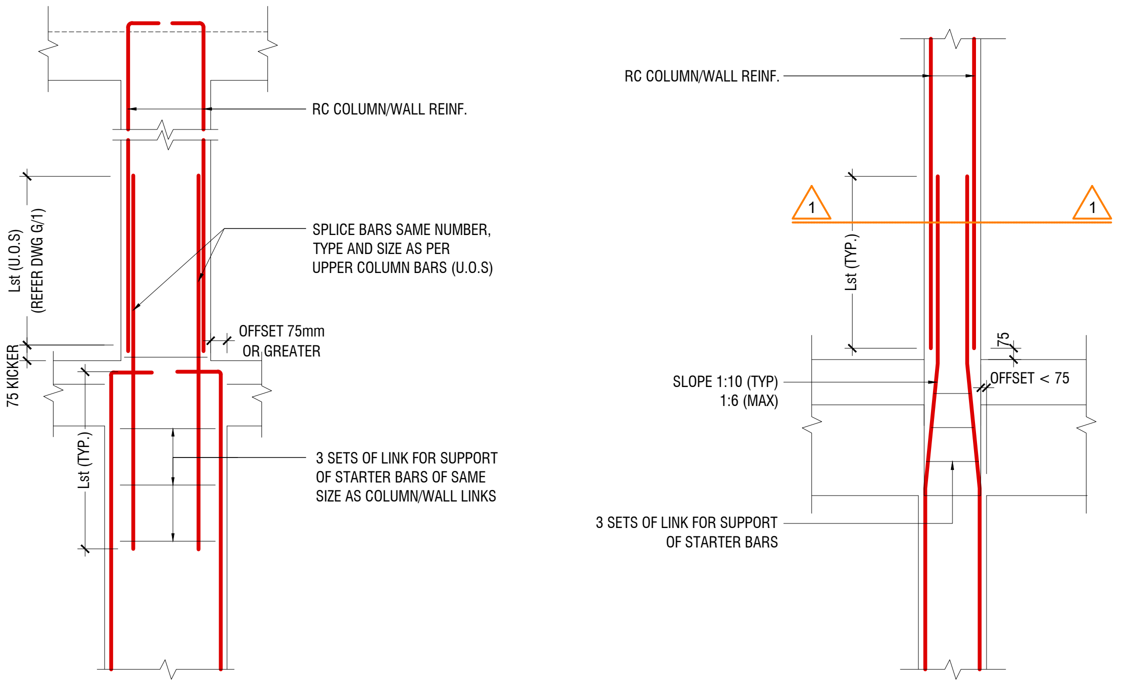
RC COLUMN/WALL REINF.
SPLICE BARS SAME NUMBER, TYPE AND SIZE AS PER UPPER COLUMN BARS (U.O.S)
Lst (U.O.S) (REFER DWG G/1)
75 KICKER
OFFSET 75mm OR GREATER
Lst (TYP.)
3 SETS OF LINK FOR SUPPORT OF STARTER BARS OF SAME SIZE AS COLUMN/WALL LINKS
RC COLUMN/WALL REINF.
1
1
Lst (TYP.)
75
SLOPE 1:10 (TYP) 1:6 (MAX)
OFFSET < 75
3 SETS OF LINK FOR SUPPORT OF STARTER BARS

A) FOR COLUMN OFFSET > 75mm

TO BE VERIFIED BY THE CONSULTING ENGINEER

B) FOR COLUMN OFFSET < 75mm

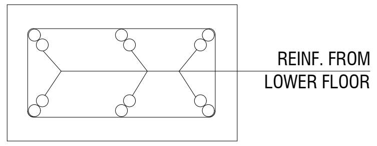
REINF. FROM LOWER FLOOR

SECTION-1-1

COLUMN/WALL REINF. LAPPING DETAIL AT FLOOR LEVEL

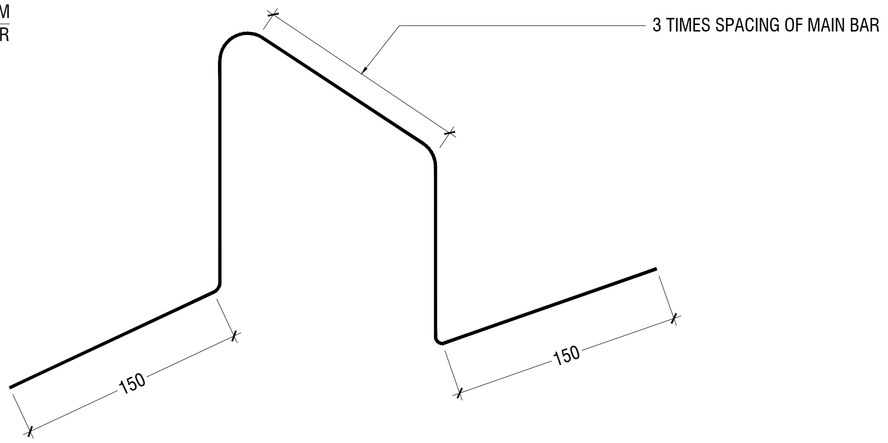
3 TIMES SPACING OF MAIN BAR
150
150

TYPICAL CHAIR DETAIL

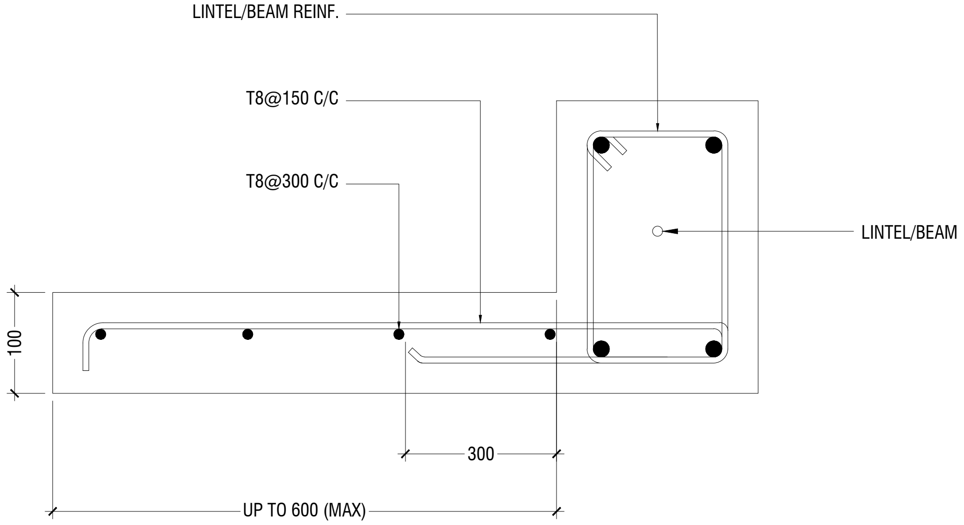
LINTEL/BEAM REINF.
T8@150 C/C
T8@300 C/C
LINTEL/BEAM
100
300
UP TO 600 (MAX)

TYPICAL CANTILEVER DETAILS

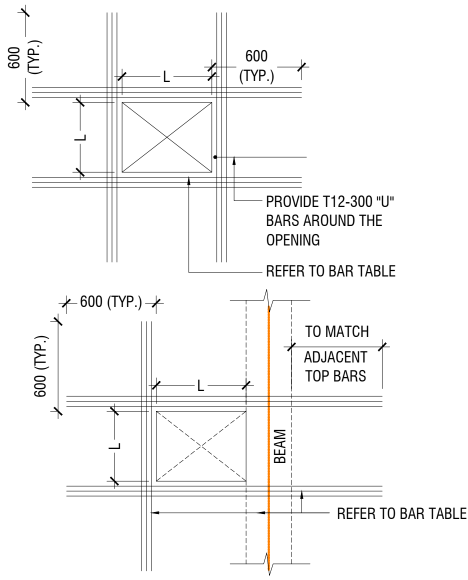
600 (TYP.)
L
600 (TYP.)
L
PROVIDE T12-300 "U" BARS AROUND THE OPENING
REFER TO BAR TABLE
600 (TYP.)
600 (TYP.)
L
L
TO MATCH ADJACENT TOP BARS
BEAM
REFER TO BAR TABLE

FLOOR OPENING (L)	ADD BARS
LESS THAN 250	3T12 T & B
L = > 250 < 500	3T16 T & B
L = ≥ 500 < 1000	3T16 T & B

NOTE:-

1. FOR OPENINGS LESS THAN 200x200. SLAB REBARS TO BE ADJUSTED AROUND OPENING.
2. FOR OPENINGS GREATER THAN 250x250 TO BE APPROVED BY THE ENGINEER.
3. ALL SLAB OPENINGS LOCATION TO BE APPROVED BY THE ENGINEER.
4. EQUIVALENT OPENING AREA SHALL APPLY THE DETAILS SHOWN ABOVE.
5. EQUIVALENT OPENING AREA SHALL INCLUDE RECTANGLE, TRIANGLE AND ANY POLYGON SHAPE.
6. EXCEPT HACKING, NO SLAB CORING ARE ADVISABLE FOR POST-TENSIONED SLAB.

TYPICAL TRIMMER BARS DETAILS FOR OPENING IN SLABS

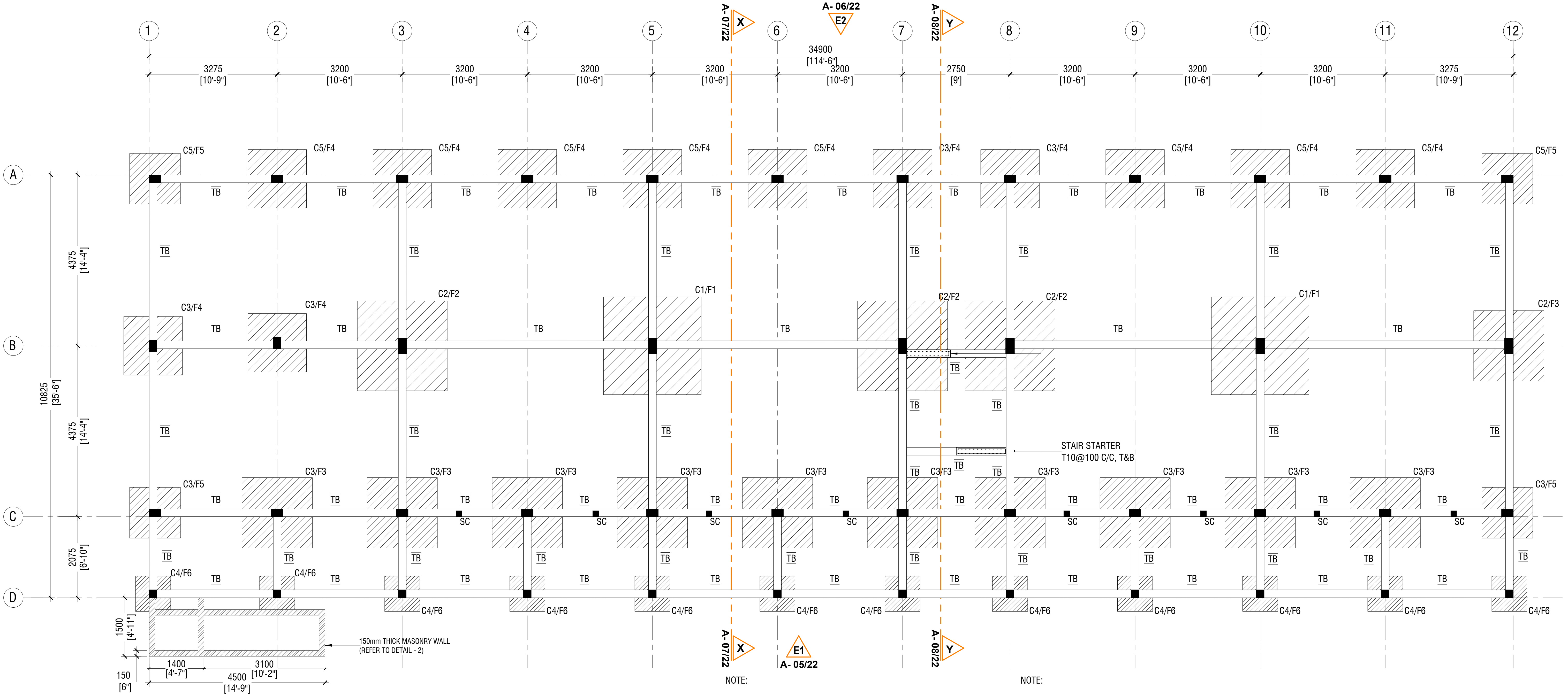
A- 06/22
E2
A- 07/22
X
A- 08/22
Y
1
2
3
4
5
6
7
8
9
10
11
12
34900
[114'-6"]
3275
[10'-9"]
3200
[10'-6"]
2750
[9']
A
B
C
D
10825
[35'-6"]
4375
[14'-4"]
2075
[6'-10"]
C5/F5
C5/F4
C3/F4
C3/F3
C2/F2
C1/F1
C2/F3
C4/F6
TB
SC
STAIR STARTER
T10@100 C/C, T&B
150mm THICK MASONRY WALL
(REFER TO DETAIL - 2)
1500
[4'-11"]
150
[6"]
1400
[4'-7"]
3100
[10'-2"]
4500
[14'-9"]
E1
A- 05/22

FOUNDATION PLAN

SCALE 1:100

0 0.5 1 2 3 4 5

NOTE:

COLUMN SIZES

C1	: 225 x 400 mm
C2	: 225 x 400 mm
C3	: 200 x 300 mm
C4	: 200 x 200 mm
C5	: 200 x 300 mm
SC	: 150 x 150 mm
COVER	: 40mm

FOUNDATION PAD SIZES

	DIMENSION	REINFORCEMENT
F1	2500 x 2500 x 400	T16@125 C/C B/W (B)
F2	2300 x 2300 x 350	T16@110 C/C B/W (B)
F3	1800 x 1800 x 300	T12@125 C/C B/W (B)
F4	1500 x 1500 x 300	T12@150 C/C B/W (B)
F5	1300 x 1300 x 300	T12@150 C/C B/W (B)
F6	900 x 900 x 300	T12@150 C/C B/W (B)

NOTE:

CONCRETE COVER

COLUMN	: 40mm
SLAB	: 30mm
BEAM	: 35mm
FOOTING	: 50mm
TIE BEAM	: 50mm

LAP LENGTH FOR BARS

25MM	: 1125 mm
20MM	: 900 mm
16MM	: 720 mm
12MM	: 550 mm
10MM	: 450 mm

CONCRETE GRADE = M25

SAFE BEARING CAPACITY = 150KPa

HOOK LENGTH AND OTHER DETAILS ARE PROVIDED IN THE GENERAL NOTES

FOUNDATION DEPTH : 1200mm BELOW GROUND LEVEL

ALL FOOTINGS ARE TO BE LAID ON TOP OF 50mm THICK LEAN CONCRETE
APPLY WATER PROOFING TO SUBSTRUCTURE (BELOW GROUND ELEMENTS)

TIE BEAM SIZES

TB	: 200 x 450 mm
COVER	: 50mm

GROUND SLAB : 100mm THK RC SLAB ON FILL
REINFORCED WITH T10@200 C/C BW

▨ -150mm THK. SOLID MASONRY BLOCK WALL

RAMP SLAB : 100mm THK RC SLAB ON COMPACTED FILL
REINFORCED WITH T10@200 C/C BW

PHYSICAL FACILITIES DEVELOPMENT SECTION
MINISTRY OF EDUCATION,
REPUBLIC OF MALDIVES

PROJECT:
08 CLASSROOM AT
R.UNGOOFAARU SCHOOL

PROJECT REFERENCE

CLIENT: MINISTRY OF EDUCATION

SCALE : AS GIVEN

ARCHITECT :

ENGINEER :

DRAWN :

CHECKED :

DATE : 16.11.2021

DWG NO : E 01/ 12

AMMENDMENTS.

Issue	Date	Description

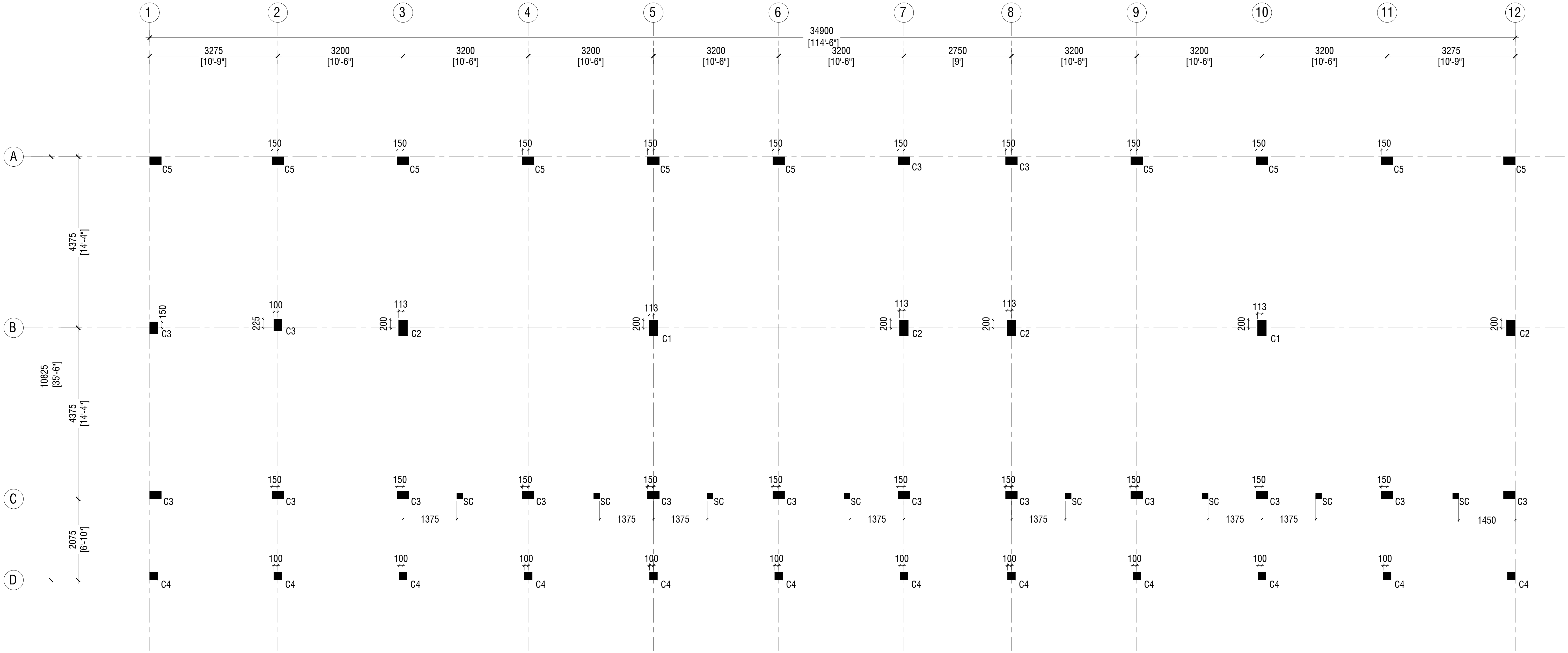
1
2
3
4
5
6
7
8
9
10
11
12
34900
[114'-6"]
3275
[10'-9"]
3200
[10'-6"]
2750
[9']
A
B
C
D
4375
[14'-4"]
10825
[35'-6"]
2075
[6'-10"]
150
100
113
200
225
C1
C2
C3
C4
C5
SC
1375
1450

FIRST FLOOR COLUMN LAYOUT PLAN

SCALE 1:100

0 0.5 1 2 3 4 5

NOTE:

COLUMN SIZES

C1 : 225 x 400 mm
C2 : 225 x 400 mm
C3 : 200 x 300 mm
C4 : 200 x 200 mm
C5 : 200 x 300 mm
SC : 150 x 150 mm
COVER : 40mm

PHYSICAL FACILITIES DEVELOPMENT SECTION
MINISTRY OF EDUCATION,
REPUBLIC OF MALDIVES

PROJECT:
08 CLASSROOM AT
R.UNGOOFAARU SCHOOL

PROJECT REFERENCE

CLIENT: MINISTRY OF EDUCATION

SCALE : AS GIVEN

ARCHITECT :
ENGINEER :
DRAWN :
CHECKED :
DATE : 16.11.2021
DWG NO : E 02/ 12

AMMENDMENTS.

Issue	Date	Description

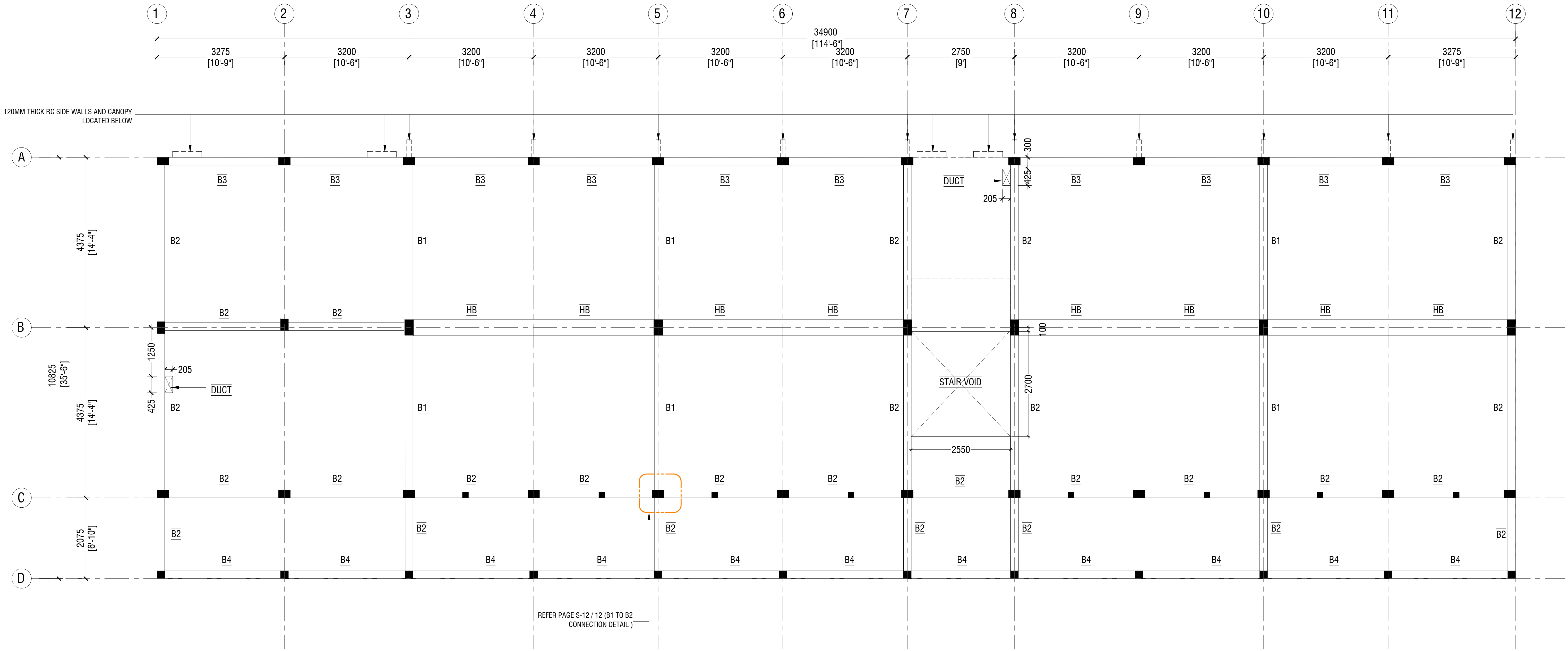
1
2
3
4
5
6
7
8
9
10
11
12
34900
[114'-6"]
3275
[10'-9"]
3200
[10'-6"]
2750
[9']
120MM THICK RC SIDE WALLS AND CANOPY
LOCATED BELOW
A
B
C
D
4375
[14'-4"]
10825
[35'-6"]
2075
[6'-10"]
B1
B2
B3
B4
HB
DUCT
205
425
300
1250
100
2700
2550
STAIR VOID
REFER PAGE S-12 / 12 (B1 TO B2
CONNECTION DETAIL)

FIRST FLOOR BEAM PLAN

SCALE 1:100

0 0.5 1 2 3 4 5

NOTE:

COLUMN SIZES

C1	: 225 x 400 mm
C2	: 225 x 400 mm
C3	: 200 x 300 mm
C4	: 200 x 200 mm
C5	: 200 x 300 mm
SC	: 150 x 150 mm
COVER	: 40mm

BEAM SIZES

B1	: 200x475 mm
B2	: 200x400 mm
B3	: 200x400 mm
B4	: 200x400 mm
HB	: 400x180 mm
COVER	: 35mm

PHYSICAL FACILITIES DEVELOPMENT SECTION MINISTRY OF EDUCATION, REPUBLIC OF MALDIVES	PROJECT: 08 CLASSROOM AT R.UNGOOFAARU SCHOOL	ARCHITECT : ENGINEER : DRAWN :
	PROJECT REFERENCE	CHECKED :
	CLIENT: MINISTRY OF EDUCATION	DATE : 16.11.2021
	SCALE : AS GIVEN	DWG NO : E 03/ 12

AMMENDMENTS.

Issue	Date	Description

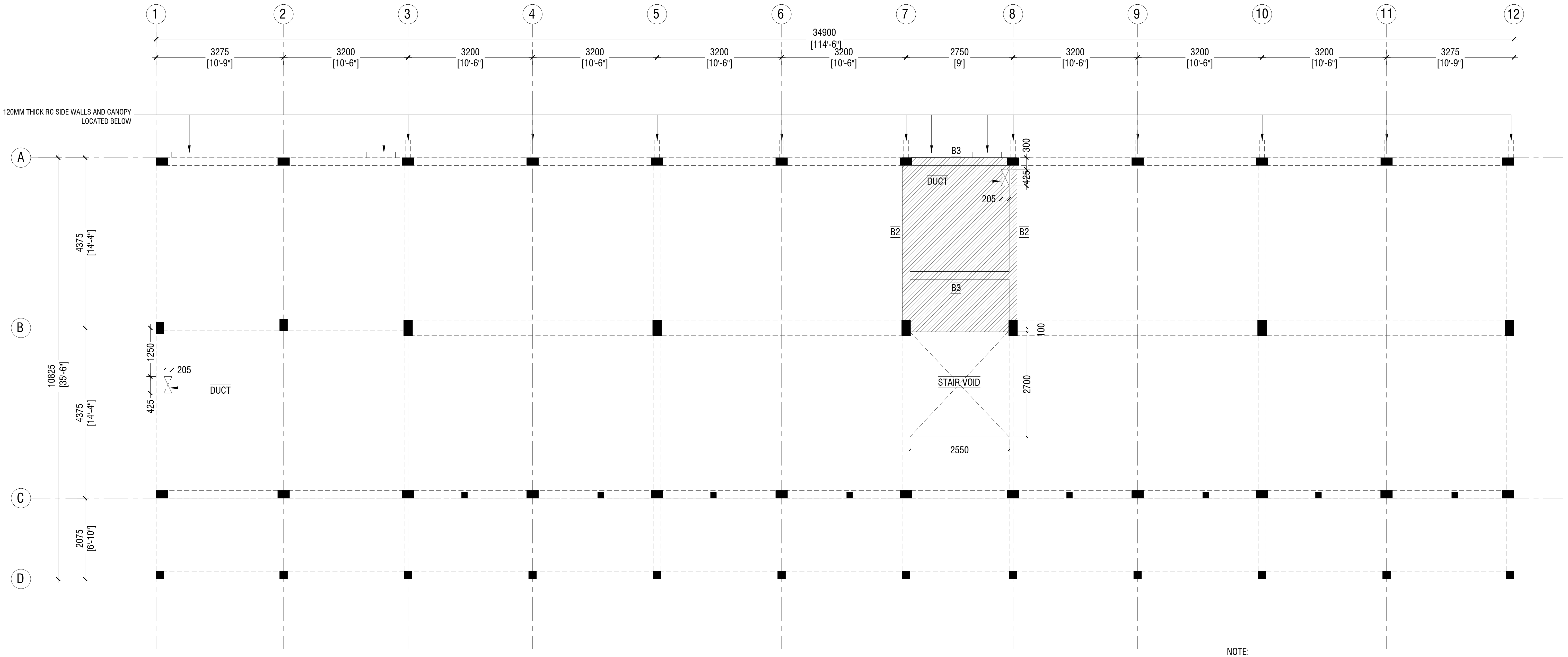
1
2
3
4
5
6
7
8
9
10
11
12
34900
[114'-6"]
3275
[10'-9"]
3200
[10'-6"]
3200
[10'-6"]
3200
[10'-6"]
3200
[10'-6"]
3200
[10'-6"]
2750
[9']
3200
[10'-6"]
3200
[10'-6"]
3200
[10'-6"]
3275
[10'-9"]
120MM THICK RC SIDE WALLS AND CANOPY
LOCATED BELOW
A
B
C
D
B3
300
DUCT
425
205
B2
B2
B3
100
STAIR VOID
2700
2550
4375
[14'-4"]
10825
[35'-6"]
1250
205
DUCT
425
4375
[14'-4"]
2075
[6'-10"]

STORE / HALF LANDING FLOOR BEAM & SLAB REINFORCEMENT PLAN (+1865)

SCALE 1:100

0 0.5 1 2 3 4 5

NOTE:

COLUMN SIZES

C1 : 225 x 400 mm
C2 : 225 x 400 mm
C3 : 200 x 300 mm
C4 : 200 x 200 mm
C5 : 200 x 300 mm
SC : 150 x 150 mm
COVER : 40mm

BEAM SIZES

B1 : 200x475 mm
B2 : 200x400 mm
B3 : 200x400 mm
B4 : 200x400 mm
HB : 400x180 mm
COVER : 35mm

▨ SLAB THICKNESS: 150mm

REINFORCEMENT: T10@150C/C B/W (T&B)

ALL REINFORCEMENT TO BE
DISCONTINUOUS OVER THE VOIDS

PHYSICAL FACILITIES DEVELOPMENT SECTION MINISTRY OF EDUCATION, REPUBLIC OF MALDIVES	PROJECT: 08 CLASSROOM AT R.UNGOOFAARU SCHOOL	ARCHITECT :
		ENGINEER :
		DRAWN :
	PROJECT REFERENCE	CHECKED :
	CLIENT: MINISTRY OF EDUCATION	DATE : 16.11.2021
	SCALE : AS GIVEN	DWG NO : E 04/ 12

AMMENDMENTS.

Issue	Date	Description

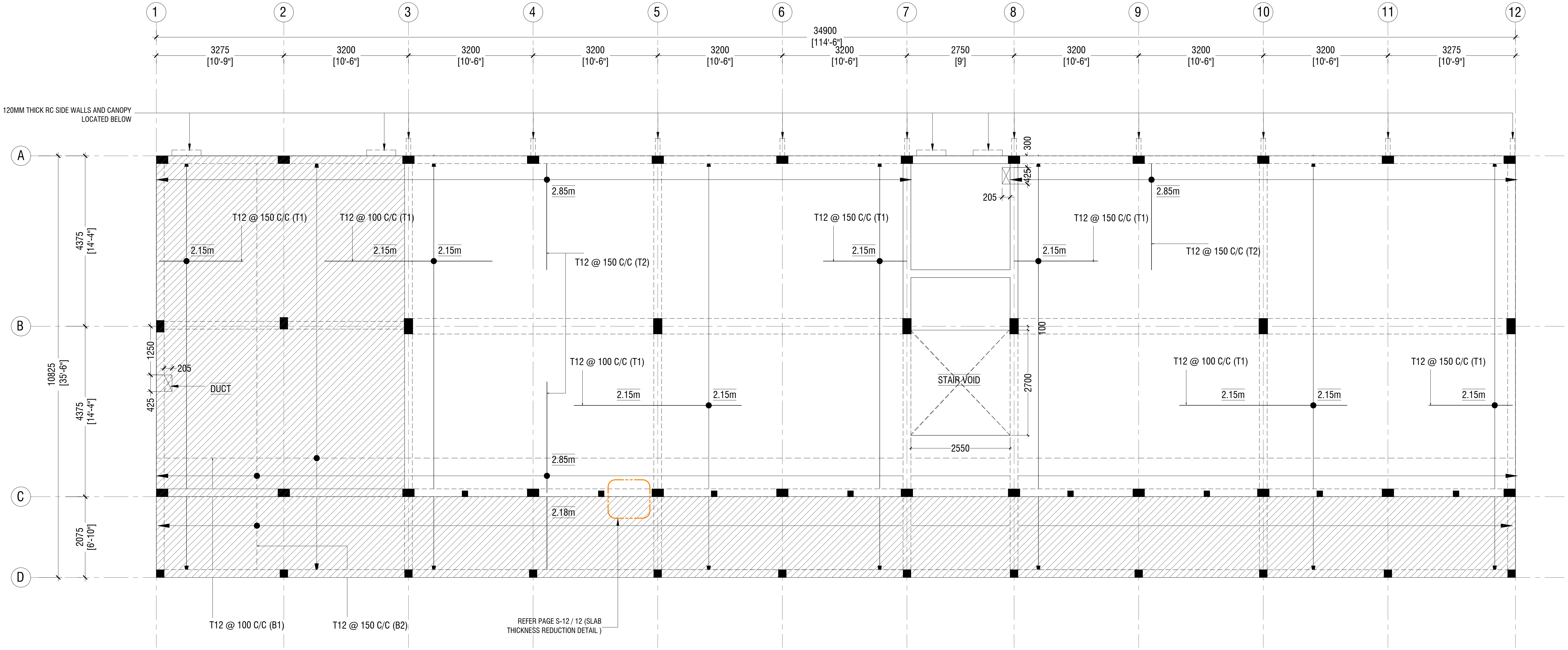
1
2
3
4
5
6
7
8
9
10
11
12
34900
[114'-6"]
3275
[10'-9"]
3200
[10'-6"]
2750
[9']
120MM THICK RC SIDE WALLS AND CANOPY LOCATED BELOW
A
B
C
D
10825
[35'-6"]
4375
[14'-4"]
2075
[6'-10"]
300
425
205
100
1250
DUCT
T12 @ 150 C/C (T1)
T12 @ 100 C/C (T1)
T12 @ 150 C/C (T2)
2.15m
2.85m
2.18m
STAIR VOID
2700
2550
T12 @ 100 C/C (B1)
T12 @ 150 C/C (B2)
REFER PAGE S-12 / 12 (SLAB THICKNESS REDUCTION DETAIL)

FIRST FLOOR SLAB REINFORCEMENT PLAN

SCALE 1:100

0 0.5 1 2 3 4 5

NOTE

☐	SLAB THICKNESS:	180mm
▨	SLAB THICKNESS:	135mm
- - -	BOTTOM REINFORCEMENT:	T12@100C/C ALONG SHORT DIRECTION (B1) T12@ 150 C/C ALONG LONGER DIRECTION (B2)
	TOP REINFORCEMENT:	T12@150C/C (AS SHOWN, UNLESS STATED)
	TOP DISTRIBUTION STEEL:	T12@150C/C (UNLESS STATED)

ALL REINFORCEMENT TO BE DISCONTINUOUS OVER THE VOIDS

PHYSICAL FACILITIES DEVELOPMENT SECTION
MINISTRY OF EDUCATION,
REPUBLIC OF MALDIVES

PROJECT:
08 CLASSROOM AT
R.UNGOOFAARU SCHOOL

PROJECT REFERENCE

CLIENT: MINISTRY OF EDUCATION

SCALE : AS GIVEN

ARCHITECT :
ENGINEER :
DRAWN :
CHECKED :
DATE : 16.11.2021
DWG NO : E 05/ 12

AMMENDMENTS.

Issue	Date	Description

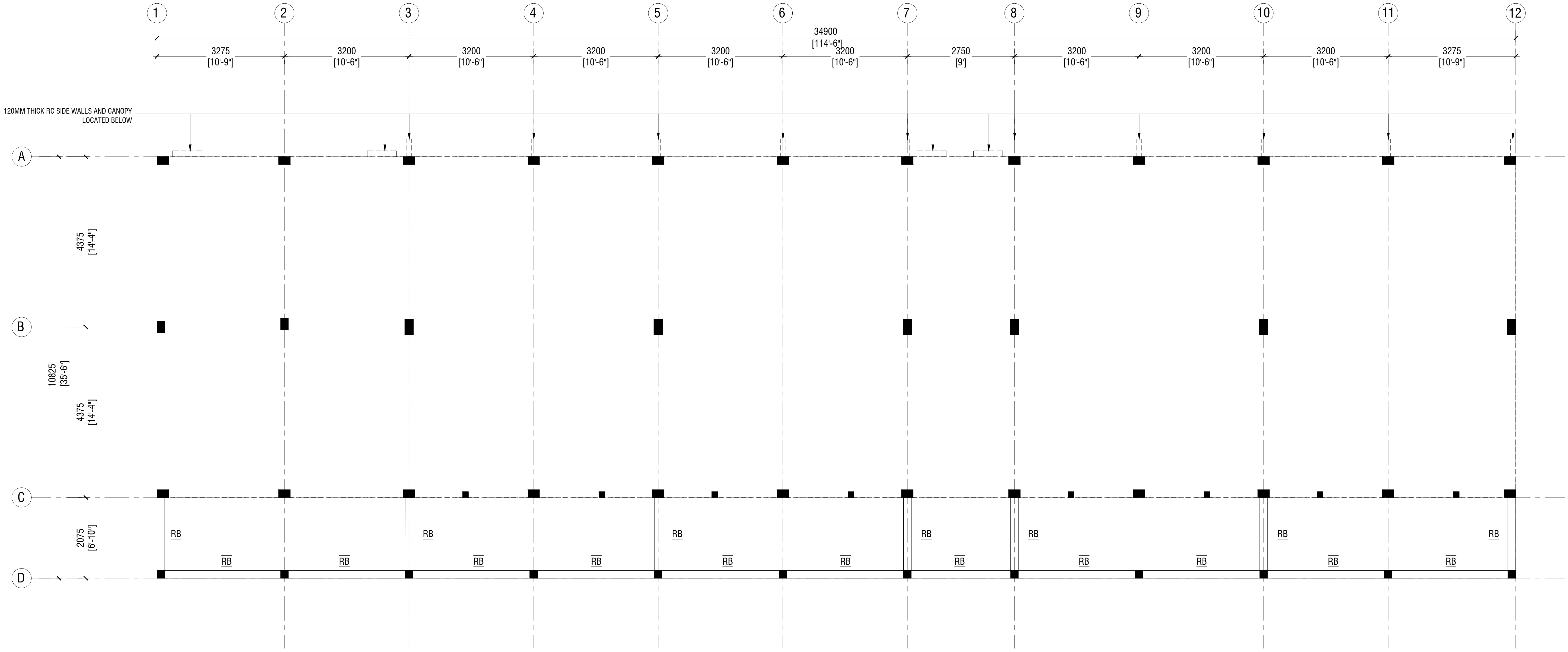
1
2
3
4
5
6
7
8
9
10
11
12
34900
[114'-6"]
3275
[10'-9"]
3200
[10'-6"]
3200
[10'-6"]
3200
[10'-6"]
3200
[10'-6"]
3200
[10'-6"]
2750
[9']
3200
[10'-6"]
3200
[10'-6"]
3200
[10'-6"]
3275
[10'-9"]
120MM THICK RC SIDE WALLS AND CANOPY
LOCATED BELOW
A
B
C
D
4375
[14'-4"]
4375
[14'-4"]
2075
[6'-10"]
10825
[35'-6"]
RB
RB
RB
RB
RB
RB
RB
RB
RB
RB
RB
RB
RB
RB
RB
RB
RB
RB
RB
RB
RB
RB
RB

ROOF BEAM PLAN - 1 @6.15 FROM F.F.L

SCALE 1:100

0 0.5 1 2 3 4 5

NOTE:

COLUMN SIZES

C1	: 225 x 400 mm
C2	: 225 x 400 mm
C3	: 200 x 300 mm
C4	: 200 x 200 mm
C5	: 200 x 300 mm
SC	: 150 x 150 mm
COVER	: 40mm

BEAM SIZES

RB	: 200x300 mm
COVER	: 35mm

PHYSICAL FACILITIES DEVELOPMENT SECTION MINISTRY OF EDUCATION, REPUBLIC OF MALDIVES	PROJECT: 08 CLASSROOM AT R.UNGOOFAARU SCHOOL	ARCHITECT : ENGINEER : DRAWN :
	PROJECT REFERENCE	CHECKED :
	CLIENT: MINISTRY OF EDUCATION	DATE : 16.11.2021
	SCALE : AS GIVEN	DWG NO : E 06/ 12

AMMENDMENTS.

Issue	Date	Description

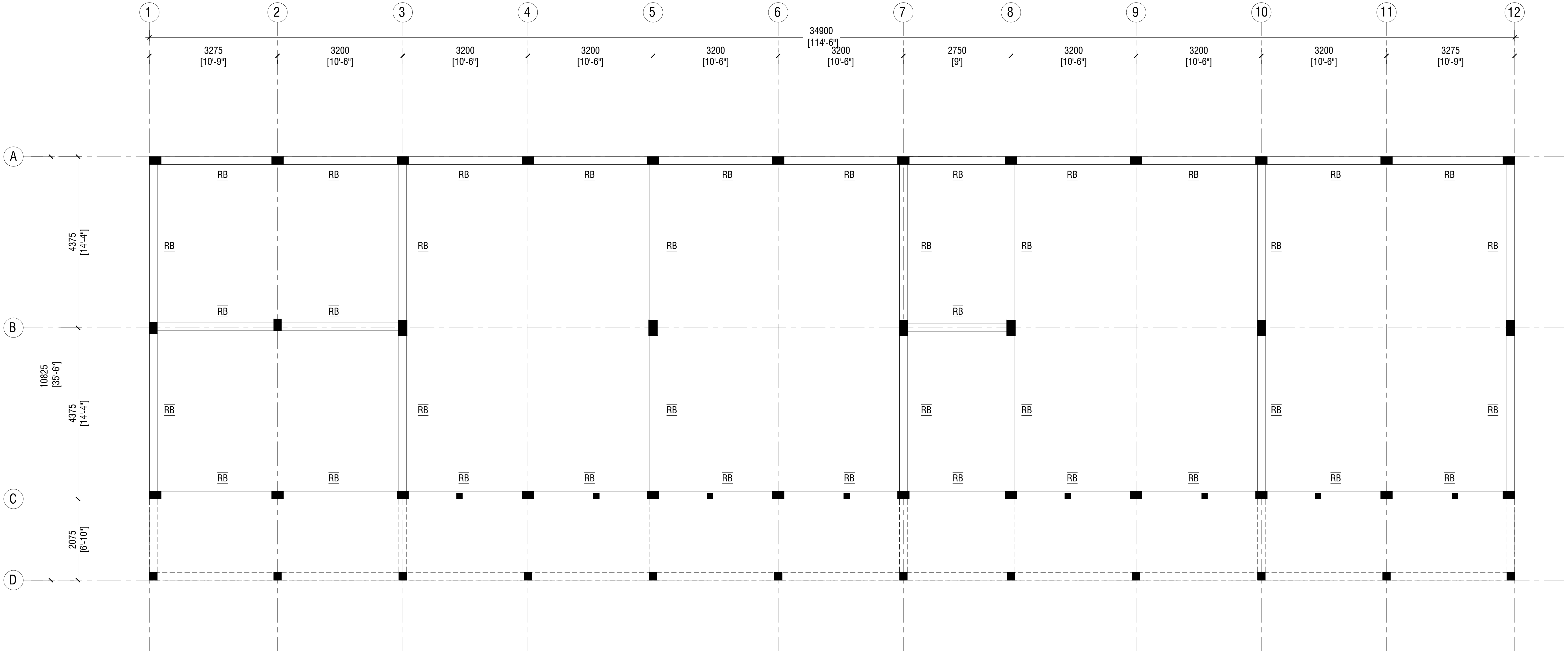
1
2
3
4
5
6
7
8
9
10
11
12
34900
[114'-6"]
3275
[10'-9"]
3200
[10'-6"]
3200
[10'-6"]
3200
[10'-6"]
3200
[10'-6"]
3200
[10'-6"]
2750
[9']
3200
[10'-6"]
3200
[10'-6"]
3200
[10'-6"]
3275
[10'-9"]
A
B
C
D
4375
[14'-4"]
4375
[14'-4"]
2075
[6'-10"]
10825
[35'-6"]
RB

ROOF BEAM PLAN - 2 @6.706 FROM F.F.L

SCALE 1:100

0 0.5 1 2 3 4 5

NOTE:

COLUMN SIZES

C1	: 225 x 400 mm
C2	: 225 x 400 mm
C3	: 200 x 300 mm
C4	: 200 x 200 mm
C5	: 200 x 300 mm
SC	: 150 x 150 mm
COVER	: 40mm

BEAM SIZES

RB	: 200x300 mm
COVER	: 35mm

PHYSICAL FACILITIES DEVELOPMENT SECTION MINISTRY OF EDUCATION, REPUBLIC OF MALDIVES	PROJECT: 08 CLASSROOM AT R.UNGOOFAARU SCHOOL	ARCHITECT : ENGINEER : DRAWN :
	PROJECT REFERENCE	CHECKED :
	CLIENT: MINISTRY OF EDUCATION	DATE : 16.11.2021
	SCALE : AS GIVEN	DWG NO : E 07/ 12

AMMENDMENTS.

Issue	Date	Description

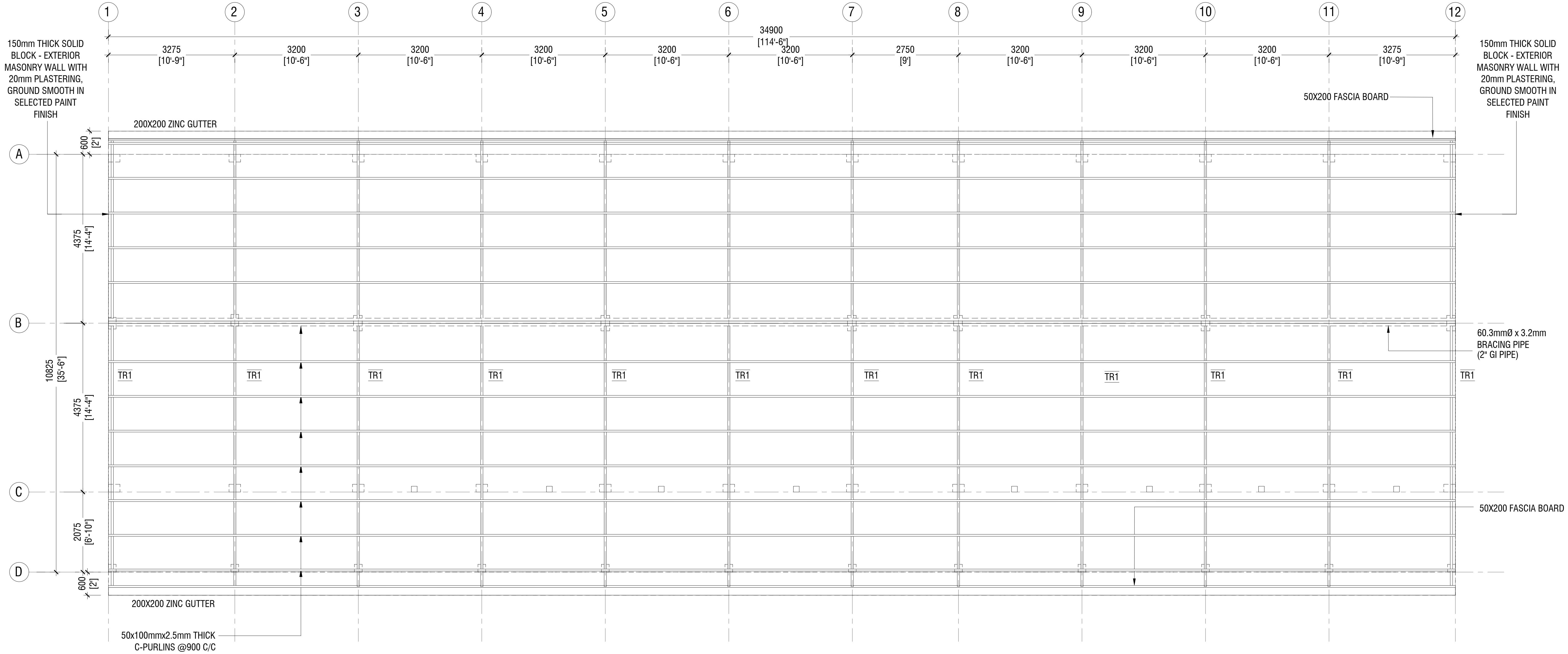
1
2
3
4
5
6
7
8
9
10
11
12
34900
[114'-6"]
3275
[10'-9"]
3200
[10'-6"]
3200
[10'-6"]
3200
[10'-6"]
3200
[10'-6"]
3200
[10'-6"]
2750
[9']
3200
[10'-6"]
3200
[10'-6"]
3200
[10'-6"]
3275
[10'-9"]
150mm THICK SOLID BLOCK - EXTERIOR MASONRY WALL WITH 20mm PLASTERING, GROUND SMOOTH IN SELECTED PAINT FINISH
150mm THICK SOLID BLOCK - EXTERIOR MASONRY WALL WITH 20mm PLASTERING, GROUND SMOOTH IN SELECTED PAINT FINISH
50X200 FASCIA BOARD
200X200 ZINC GUTTER
A
B
C
D
600
[2']
4375
[14'-4"]
10825
[35'-6"]
4375
[14'-4"]
2075
[6'-10"]
600
[2']
60.3mmØ x 3.2mm BRACING PIPE (2" GI PIPE)
TR1
TR1
TR1
TR1
TR1
TR1
TR1
TR1
TR1
TR1
TR1
TR1
50X200 FASCIA BOARD
200X200 ZINC GUTTER
50x100mmx2.5mm THICK C-PURLINS @900 C/C

ROOF TRUSS & FRAMING PLAN

SCALE 1:100

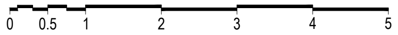

PHYSICAL FACILITIES DEVELOPMENT SECTION MINISTRY OF EDUCATION, REPUBLIC OF MALDIVES	PROJECT: 08 CLASSROOM AT R.UNGOOFAARU SCHOOL	ARCHITECT : ENGINEER : DRAWN :
	PROJECT REFERENCE	CHECKED :
	CLIENT: MINISTRY OF EDUCATION	DATE : 16.11.2021
	SCALE : AS GIVEN	DWG NO : E 08/ 12

AMMENDMENTS.

Issue	Date	Description

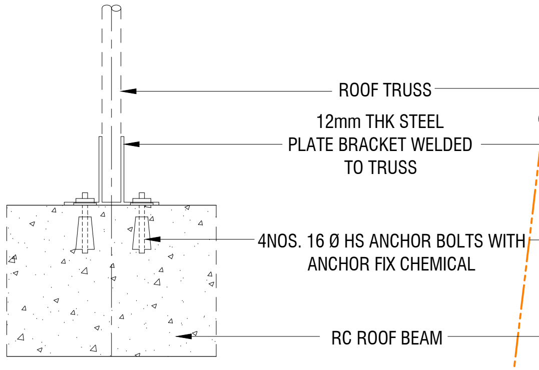
ROOF TRUSS
12mm THK STEEL PLATE BRACKET WELDED TO TRUSS
4NOS. 16 Ø HS ANCHOR BOLTS WITH ANCHOR FIX CHEMICAL
RC ROOF BEAM

ELEVATION

SCALE 1:20

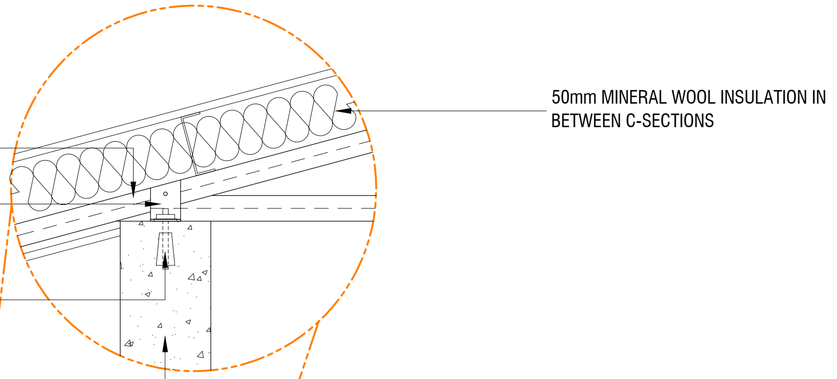
50mm MINERAL WOOL INSULATION IN BETWEEN C-SECTIONS

SECTION

SCALE 1:20

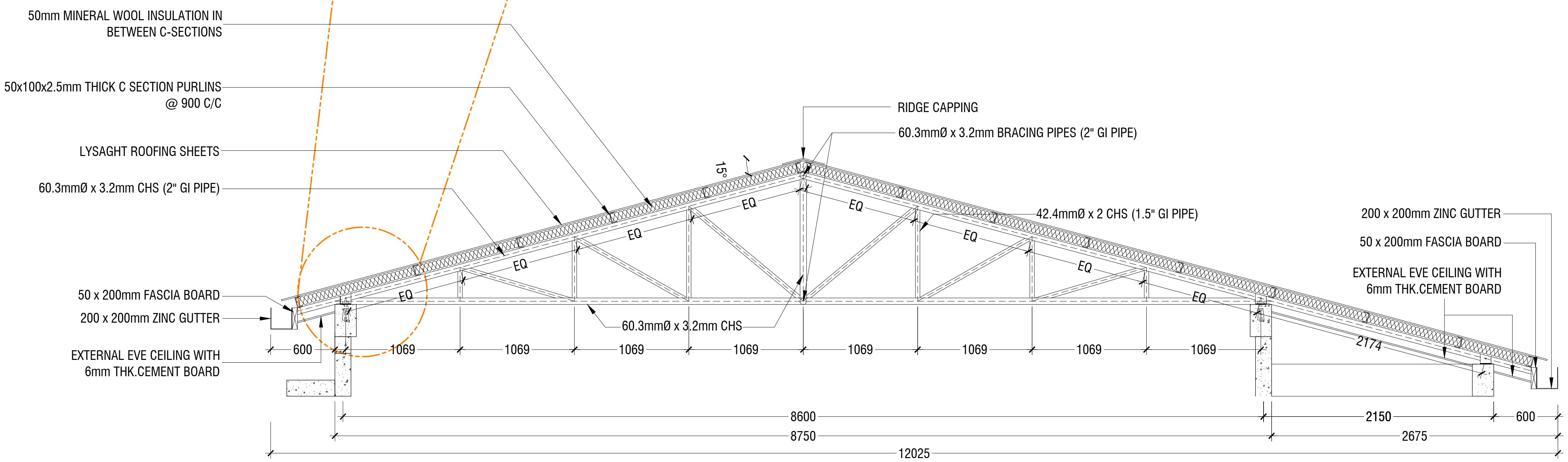
50mm MINERAL WOOL INSULATION IN BETWEEN C-SECTIONS
50x100x2.5mm THICK C SECTION PURLINS @ 900 C/C
LYSAGHT ROOFING SHEETS
60.3mmØ x 3.2mm CHS (2" GI PIPE)
50 x 200mm FASCIA BOARD
200 x 200mm ZINC GUTTER
EXTERNAL EVE CEILING WITH 6mm THK.CEMENT BOARD
RIDGE CAPPING
60.3mmØ x 3.2mm BRACING PIPES (2" GI PIPE)
15°
EQ
EQ
EQ
EQ
EQ
EQ
EQ
EQ
42.4mmØ x 2 CHS (1.5" GI PIPE)
60.3mmØ x 3.2mm CHS
200 x 200mm ZINC GUTTER
50 x 200mm FASCIA BOARD
EXTERNAL EVE CEILING WITH 6mm THK.CEMENT BOARD
2174
600
1069
1069
1069
1069
1069
1069
1069
1069
8600
8750
12025
2150
600
2675

TRUSS TYPE TR1

SCALE 1:50

0 0.25 0.5 1 1.5 2 2.5

NOTE
- CORROSION PROTECTION: GALVANIZED COATING THICKNESS SHALL NOT BE LESS THAN 80 MICRONS
- ALL FILLET WELDS TO BE 4mm THICK
- CONTRACTOR AND CONSULTANT TO CONFIRM ON SITE TRUSS SPAN AND DIMENSIONS BEFORE FABRICATION

PHYSICAL FACILITIES DEVELOPMENT SECTION MINISTRY OF EDUCATION, REPUBLIC OF MALDIVES	PROJECT: 08 CLASSROOM AT R.UNGOOFAARU SCHOOL	ARCHITECT :
		ENGINEER :
		DRAWN :
	PROJECT REFERENCE	CHECKED :
	CLIENT: MINISTRY OF EDUCATION	DATE : 16.11.2021
	SCALE : AS GIVEN	DWG NO : E 09/ 12

AMMENDMENTS.

Issue	Date	Description

	DIMENSION	REINFORCEMENT
F1	2500 x 2500 x 400	T16@125 C/C B/W (B)
F2	2300 x 2300 x 350	T16@110 C/C B/W (B)
F3	1800 x 1800 x 300	T12@125 C/C B/W (B)
F4	1500 x 1500 x 300	T12@150 C/C B/W (B)
F5	1300 x 1300 x 300	T12@150 C/C B/W (B)
F6	900 x 900 x 300	T12@150 C/C B/W (B)

FOUNDATION DEPTH = 1200mm

NOTE:-
COVER TO FOUNDATION = 50mm
COVER TO COLUMNS = 40mm
COVER TO BEAMS = 35mm
COVER TO SLAB = 30mm
LAPS = Ø OF BAR x 45
BEAMS @END SUPPORT = Ø OF BAR x 12

GRADE OF CONCRETE = M25

FOUNDATION PADS

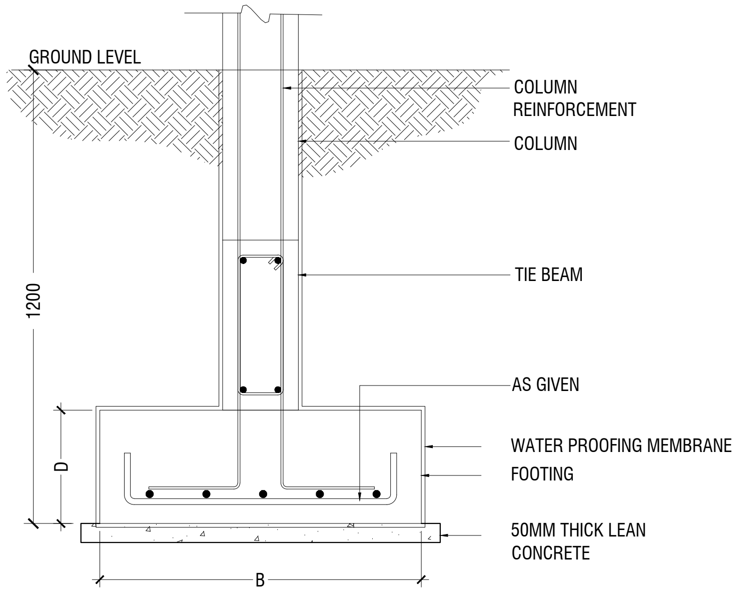
GROUND LEVEL
COLUMN REINFORCEMENT
COLUMN
TIE BEAM
AS GIVEN
WATER PROOFING MEMBRANE
FOOTING
50MM THICK LEAN CONCRETE
1200
D
B

TYPICAL FOOTING SECTION

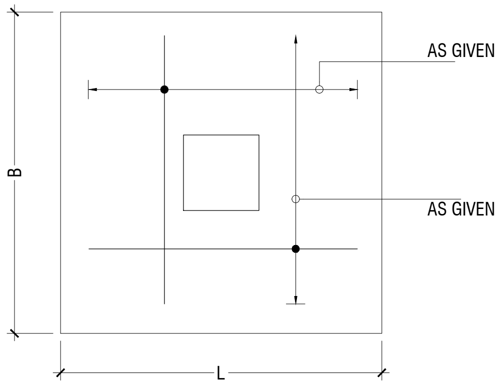
AS GIVEN
AS GIVEN
B
L

PLAN

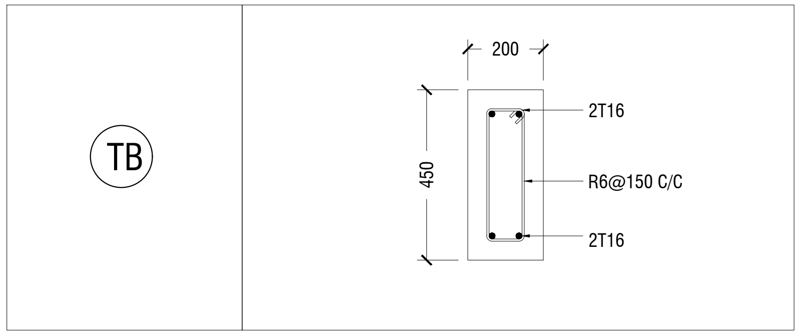
TB
200
450
2T16
R6@150 C/C
2T16

FOUNDATION DETAILS

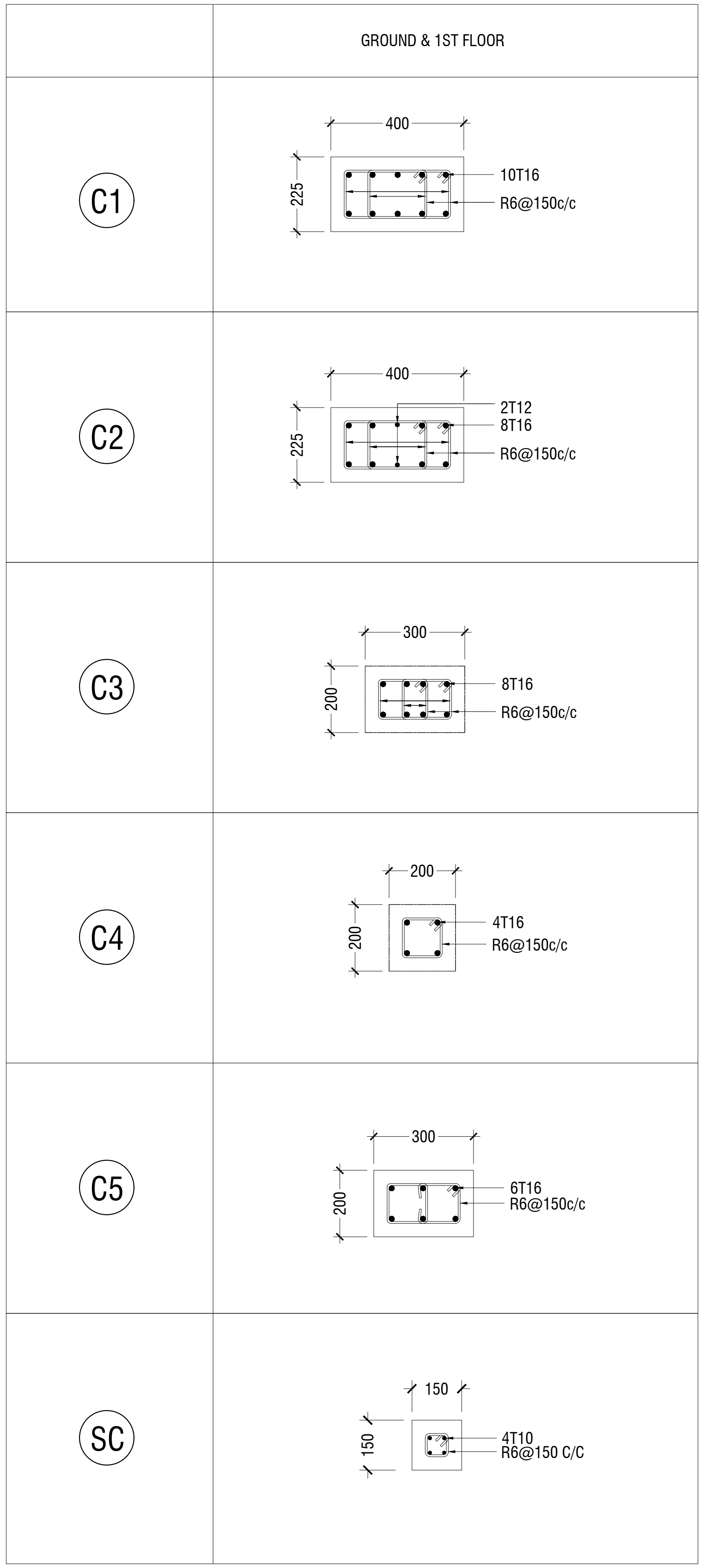
GROUND & 1ST FLOOR
C1
400
225
10T16
R6@150c/c
C2
400
225
2T12
8T16
R6@150c/c
C3
300
200
8T16
R6@150c/c
C4
200
200
4T16
R6@150c/c
C5
300
200
6T16
R6@150c/c
SC
150
150
4T10
R6@150 C/C

COLUMN DETAIL

PHYSICAL FACILITIES DEVELOPMENT SECTION MINISTRY OF EDUCATION, REPUBLIC OF MALDIVES	PROJECT: 08 CLASSROOM AT R.UNGOOFAARU SCHOOL	ARCHITECT : ENGINEER : DRAWN :
	PROJECT REFERENCE	CHECKED :
	CLIENT: MINISTRY OF EDUCATION	DATE : 16.11.2021
	SCALE : AS GIVEN	DWG NO : E 10/ 12

AMMENDMENTS.

Issue	Date	Description

STRUCTURAL DETAILS - 1

SCALE 1:20

0 0.1 0.2 0.4 0.6 0.8 1

	MIDSPAN	SUPPORT
B1	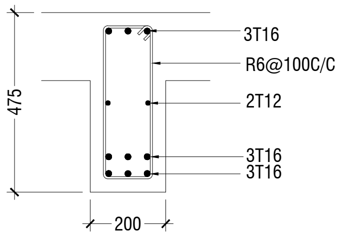 475 3T16 R6@100C/C 2T12 3T16 3T16 200	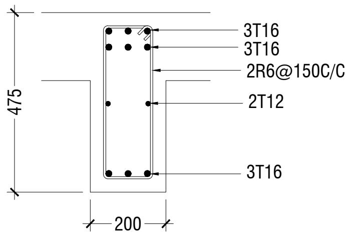 475 3T16 3T16 2R6@150C/C 2T12 3T16 200
B2	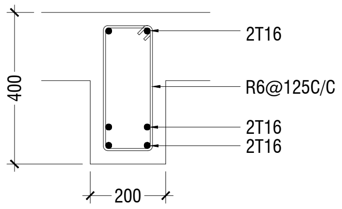 400 2T16 R6@125C/C 2T16 2T16 200	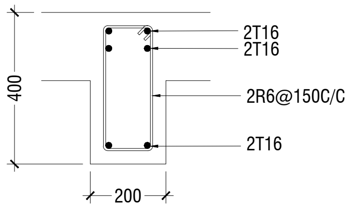 400 2T16 2T16 2R6@150C/C 2T16 200
B3	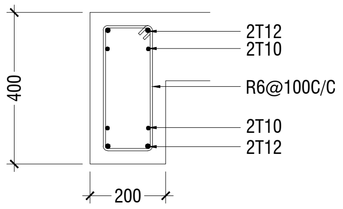 400 2T12 2T10 R6@100C/C 2T10 2T12 200	
B4	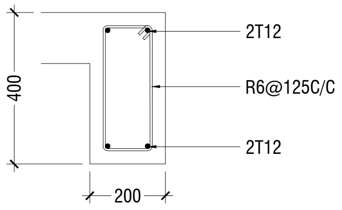 400 2T12 R6@125C/C 2T12 200	
RB	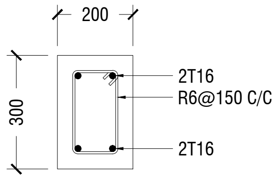 200 300 2T16 R6@150 C/C 2T16	
HB	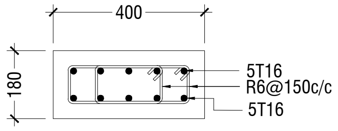 400 180 5T16 R6@150c/c 5T16	

BEAM DETAIL

NOTE:
PROVIDE 25MM SPACER BAR @ 2000 C/C BETWEEN TWO LAYERS OF BEAM REINFORCEMENT

LT1	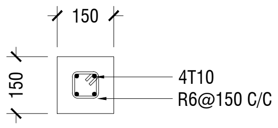 150 150 4T10 R6@150 C/C
LT2	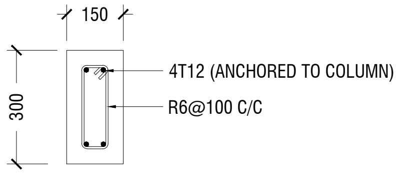 150 300 4T12 (ANCHORED TO COLUMN) R6@100 C/C

LINTELS OVER ALL DOORS, WINDOWS
(THAT DOES NOT RISE TO ROOF BEAM LEVEL)
LT2 FOR WINDOW (W2) ONLY

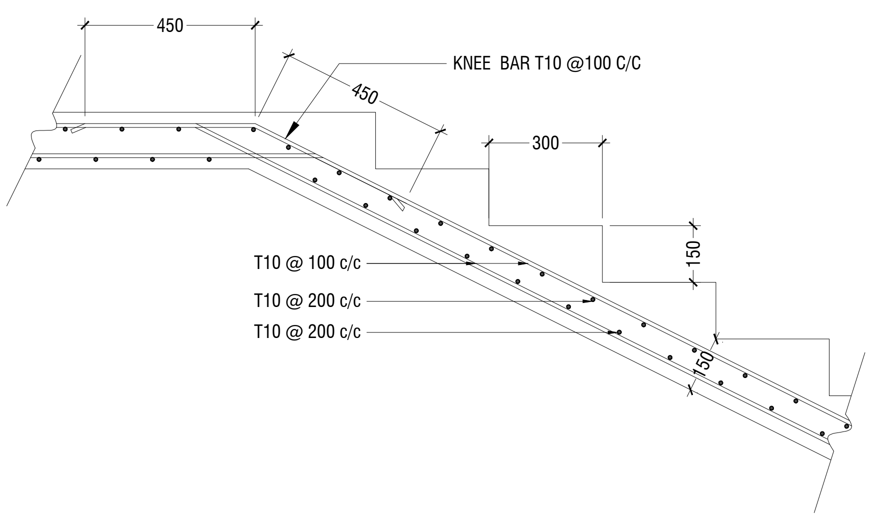
450
KNEE BAR T10 @100 C/C
450
300
150
T10 @ 100 c/c
T10 @ 200 c/c
T10 @ 200 c/c
150

MAIN STAIRCASE REINFORCEMENT DETAIL

STRUCTURAL DETAILS - 2

SCALE 1:20

0 0.1 0.2 0.4 0.6 0.8 1

PHYSICAL FACILITIES DEVELOPMENT SECTION MINISTRY OF EDUCATION, REPUBLIC OF MALDIVES	PROJECT: 08 CLASSROOM AT R.UNGOOFAARU SCHOOL	ARCHITECT :
		ENGINEER :
		DRAWN :
	PROJECT REFERENCE	CHECKED :
	CLIENT: MINISTRY OF EDUCATION	DATE : 16.11.2021
	SCALE : AS GIVEN	DWG NO : E 11/ 12

AMMENDMENTS.

Issue	Date	Description

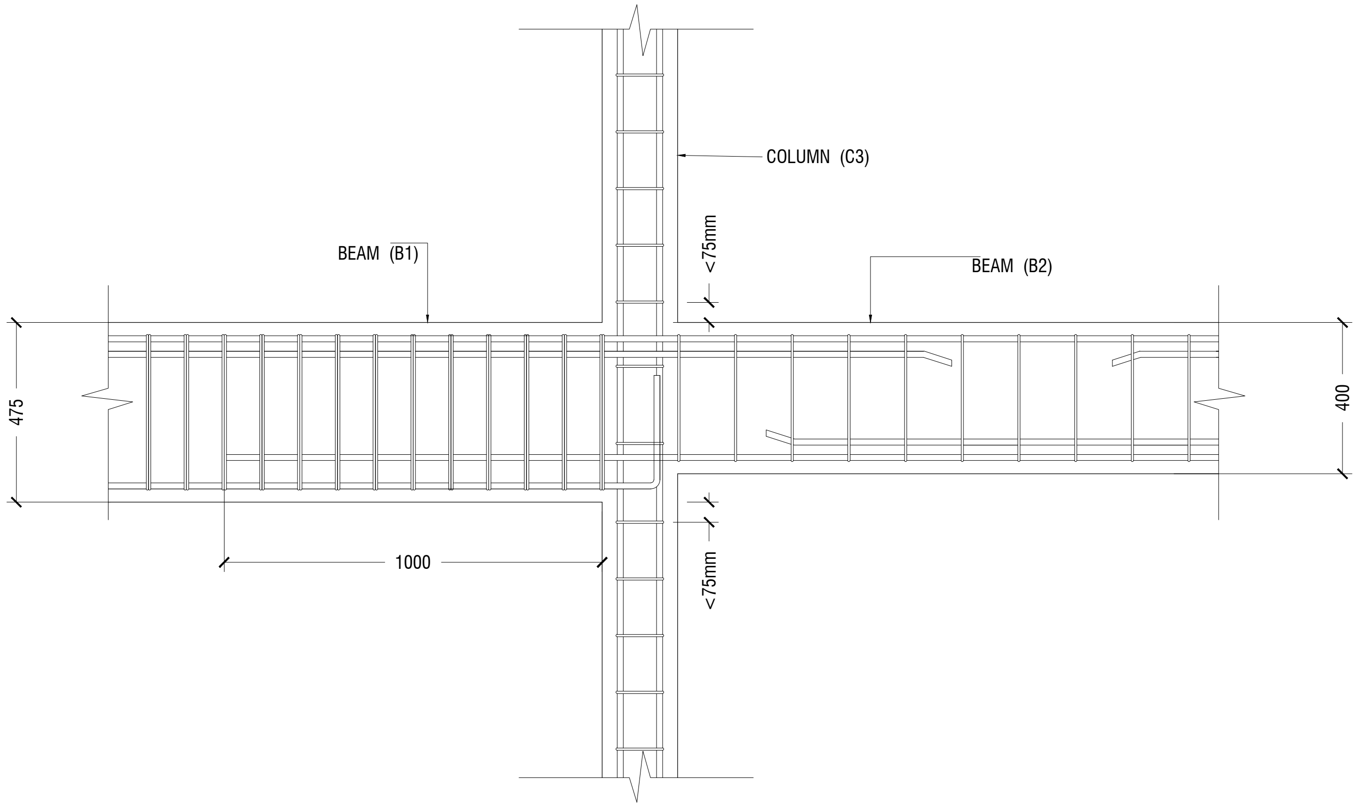
COLUMN (C3)
BEAM (B1)
BEAM (B2)
<75mm
475
400
1000
<75mm

B1 TO B2 CONNECTION DETAIL

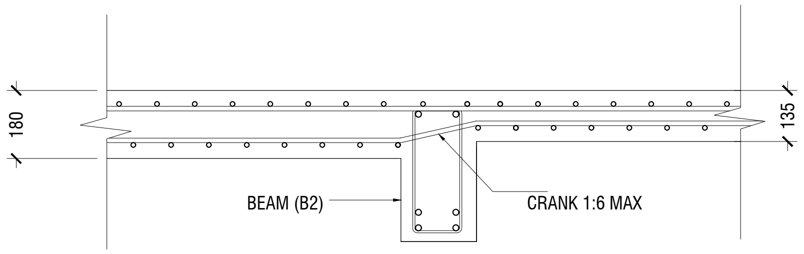
180
135
BEAM (B2)
CRANK 1:6 MAX

SLAB THICKNESS REDUCTION DETAIL

STRUCTURAL DETAILS - 3

SCALE 1:20

0 0.1 0.2 0.4 0.6 0.8 1

	PROJECT: 08 CLASSROOM AT R.UNGOOFAARU SCHOOL	ARCHITECT :
		ENGINEER :
		DRAWN :
PHYSICAL FACILITIES DEVELOPMENT SECTION MINISTRY OF EDUCATION, REPUBLIC OF MALDIVES	PROJECT REFERENCE	CHECKED :
	CLIENT: MINISTRY OF EDUCATION	DATE : 16.11.2021
	SCALE : AS GIVEN	DWG NO : E 12/ 12

AMMENDMENTS.

Issue	Date	Description

Proposed 8 Classroom at
R.Ungoofaaru School
(02 Storey)

SERVICES DRAWINGS
Client: Ministry of Education

TABLE OF CONTENTS

DRAWING No.	TITLE	REVISION No.	DATE	REMARKS
SERVICES		---	---	---
S - 01 / 13	GROUND FLOOR DRAINAGE LAYOUT	---	---	---
S - 02 / 13	FIRST - SECOND FLOOR DRAINAGE LAYOUT	---	---	---
S - 03 / 13	ROOF DRAINAGE LAYOUT	---	---	---
S - 04 / 13	GROUND FLOOR PLUMBING LAYOUT	---	---	---
S - 05 / 13	FIRST - SECOND FLOOR PLUMBING LAYOUT	---	---	---
S - 06 / 13	GROUND FLOOR LIGHTING LAYOUT	---	---	---
S - 07 / 13	FIRST - SECOND FLOOR LIGHTING LAYOUT	---	---	---
S - 08 / 13	GROUND FLOOR POWER LAYOUT	---	---	---
S - 09 / 13	FIRST - SECOND FLOOR POWER LAYOUT	---	---	---
S - 10 / 13	GROUND FLOOR FDP LAYOUT	---	---	---
S - 11 / 13	FIRST - SECOND FLOOR FDP LAYOUT	---	---	---
S - 12 / 13	SEPTIC TANK DETAIL	---	---	---
S - 13 / 13	GROUND WATER WELL DETAIL	---	---	---

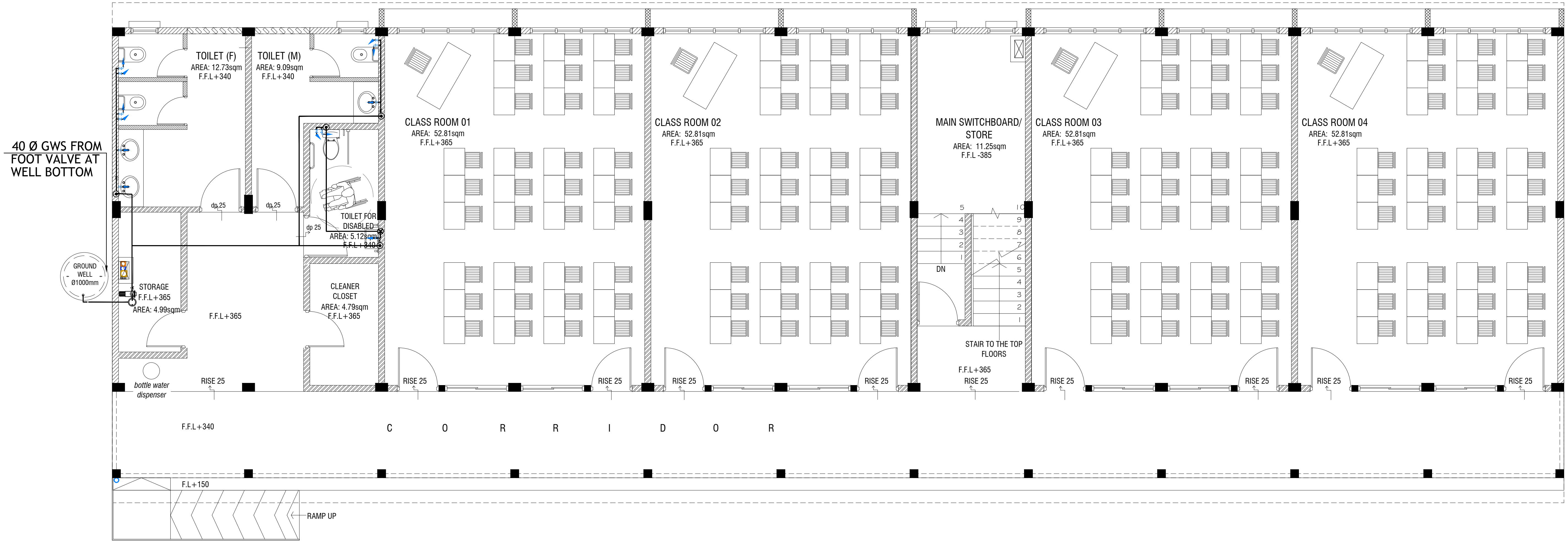
40 Ø GWS FROM
FOOT VALVE AT
WELL BOTTOM
GROUND
WELL
Ø1000mm
TOILET (F)
AREA: 12.73sqm
F.F.L+340
TOILET (M)
AREA: 9.09sqm
F.F.L+340
dp 25
dp 25
dp 25
TOILET FOR
DISABLED
AREA: 5.12sqm
F.F.L+340
STORAGE
F.F.L+365
AREA: 4.99sqm
F.F.L+365
CLEANER
CLOSET
AREA: 4.79sqm
F.F.L+365
bottle water
dispenser
RISE 25
CLASS ROOM 01
AREA: 52.81sqm
F.F.L+365
CLASS ROOM 02
AREA: 52.81sqm
F.F.L+365
MAIN SWITCHBOARD/
STORE
AREA: 11.25sqm
F.F.L -385
DN
STAIR TO THE TOP
FLOORS
F.F.L+365
CLASS ROOM 03
AREA: 52.81sqm
F.F.L+365
CLASS ROOM 04
AREA: 52.81sqm
F.F.L+365
RISE 25
F.F.L+340
C O R R I D O R
F.L+150
RAMP UP

GROUND FLOOR PLUMBING LAYOUT

SCALE 1:100

0 0.5 1 2 3 4 5

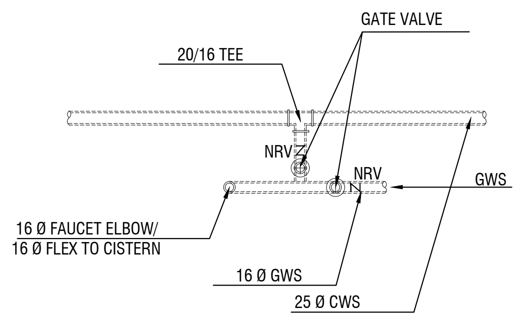
GATE VALVE
20/16 TEE
NRV
NRV
GWS
16 Ø FAUCET ELBOW/
16 Ø FLEX TO CISTERN
16 Ø GWS
25 Ø CWS

SWITCHING VALVE ARRANGEMENT BETWEEN SUPPLY WATER/GROUND WATER TO WC

LEGEND

↑	16 Ø COLD WATER SUPPLY TO CISTERN
↗	16 Ø COLD WATER SUPPLY TO BIDET SHOWER
→	16 Ø COLD WATER SUPPLY TO BASIN FAUCET / SINK
GV	GATE VALVE
——	25 Ø COLD WATER SUPPLY PIPES RUN UNDERGROUND
——	25 Ø COLD WATER SUPPLY PIPES RUN IN WALL / UNDER FALSE CEILING
⦿	RISE IN WALL
⊗	DROP IN WALL
CWS	COLD WATER SUPPLY
HWS	HOT WATER SUPPLY
——	GROUND WATER SUPPLY

NOTE:
- THE WELL SHALL BE RELOCATED ACCORDING TO THE SALINITY OF THE GROUND WATER.
- BASED ON WELL LOCATION PUMP CAPACITY TO BE DECIDED

PHYSICAL FACILITIES DEVELOPMENT SECTION MINISTRY OF EDUCATION, REPUBLIC OF MALDIVES	PROJECT: 08 CLASSROOM AT R.UNGOOFAARU SCHOOL	ARCHITECT : ENGINEER : DRAWN :
	PROJECT REFERENCE	CHECKED :
	CLIENT: MINISTRY OF EDUCATION	DATE : 16.11.2021
	SCALE : AS GIVEN	DWG NO : S 04/ 13

AMMENDMENTS.

Issue	Date	Description

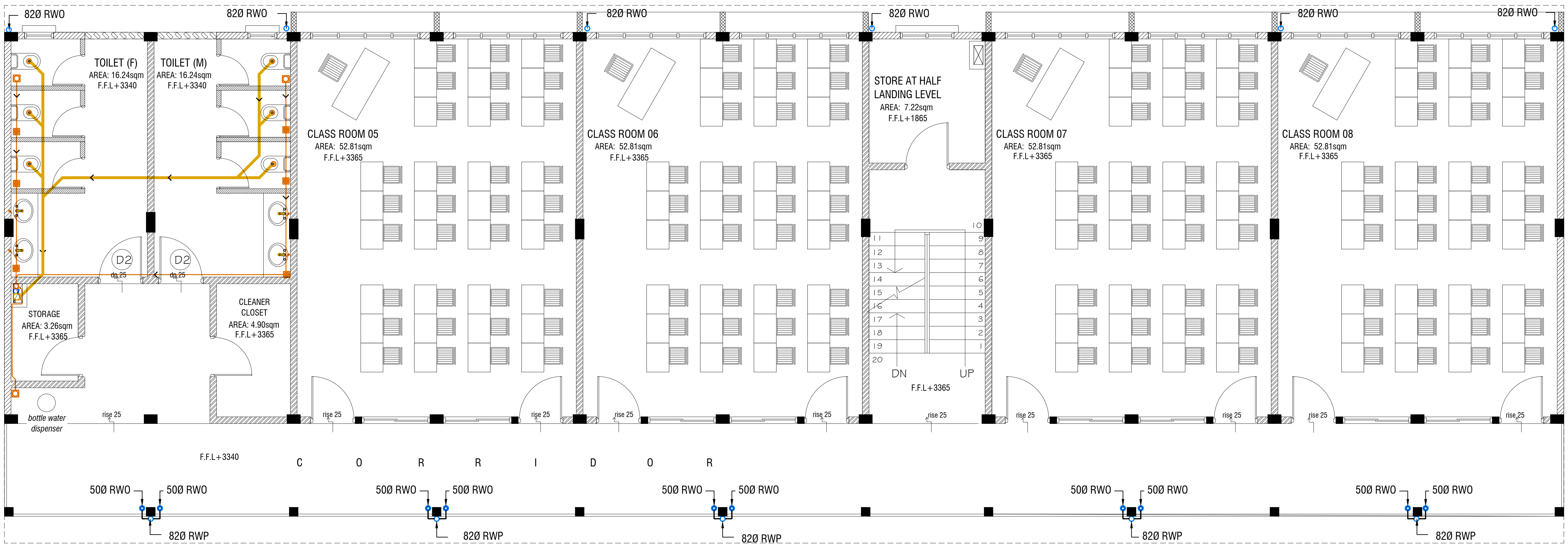
82Ø RWO
82Ø RWO
82Ø RWO
82Ø RWO
82Ø RWO
82Ø RWO
TOILET (F)
AREA: 16.24sqm
F.F.L+3340
TOILET (M)
AREA: 16.24sqm
F.F.L+3340
D2
dp 25
D2
dp 25
STORAGE
AREA: 3.26sqm
F.F.L+3365
CLEANER
CLOSET
AREA: 4.90sqm
F.F.L+3365
bottle water
dispenser
rise 25
CLASS ROOM 05
AREA: 52.81sqm
F.F.L+3365
CLASS ROOM 06
AREA: 52.81sqm
F.F.L+3365
STORE AT HALF
LANDING LEVEL
AREA: 7.22sqm
F.F.L+1865
DN
UP
F.F.L+3365
CLASS ROOM 07
AREA: 52.81sqm
F.F.L+3365
CLASS ROOM 08
AREA: 52.81sqm
F.F.L+3365
rise 25
F.F.L+3340
C O R R I D O R
50Ø RWO
820 RWP

FIRST FLOOR DRAINAGE LAYOUT

SCALE 1:100

0 0.5 1 2 3 4 5

LEGEND

FG	■	FLOOR GULLY
FD	▣	FLOOR DRAIN
WM	◎	40 Ø STUB FOR WASHING MACHINE
SP	━○	110 Ø SOIL PIPE
SVP	○	110 Ø SOIL VENT PIPE
WP	—○	82 Ø WASTE PIPE
WVP	○	82 Ø WASTE VENT PIPE
WP	—○	40 Ø WASTE PIPE
RWP	—○	82/50 Ø RAINWATER PIPE
RWO	◉	82/50 Ø DRAIN OUTLET
CD	—	25 Ø DRAIN PIPE
MHVP	—○	50 Ø MANHOLE VENT PIPE

NOTE:

- ALL SOIL AND WASTE PIPES TO BE UNDER THE SLAB LEVEL.

PHYSICAL FACILITIES DEVELOPMENT SECTION
MINISTRY OF EDUCATION,
REPUBLIC OF MALDIVES

PROJECT:
08 CLASSROOM AT
R.UNGOOFAARU SCHOOL

PROJECT REFERENCE

CLIENT: MINISTRY OF EDUCATION

SCALE : AS GIVEN

ARCHITECT :

ENGINEER :

DRAWN :

CHECKED :

DATE : 16.11.2021

DWG NO : S 02/ 13

AMMENDMENTS.

Issue	Date	Description

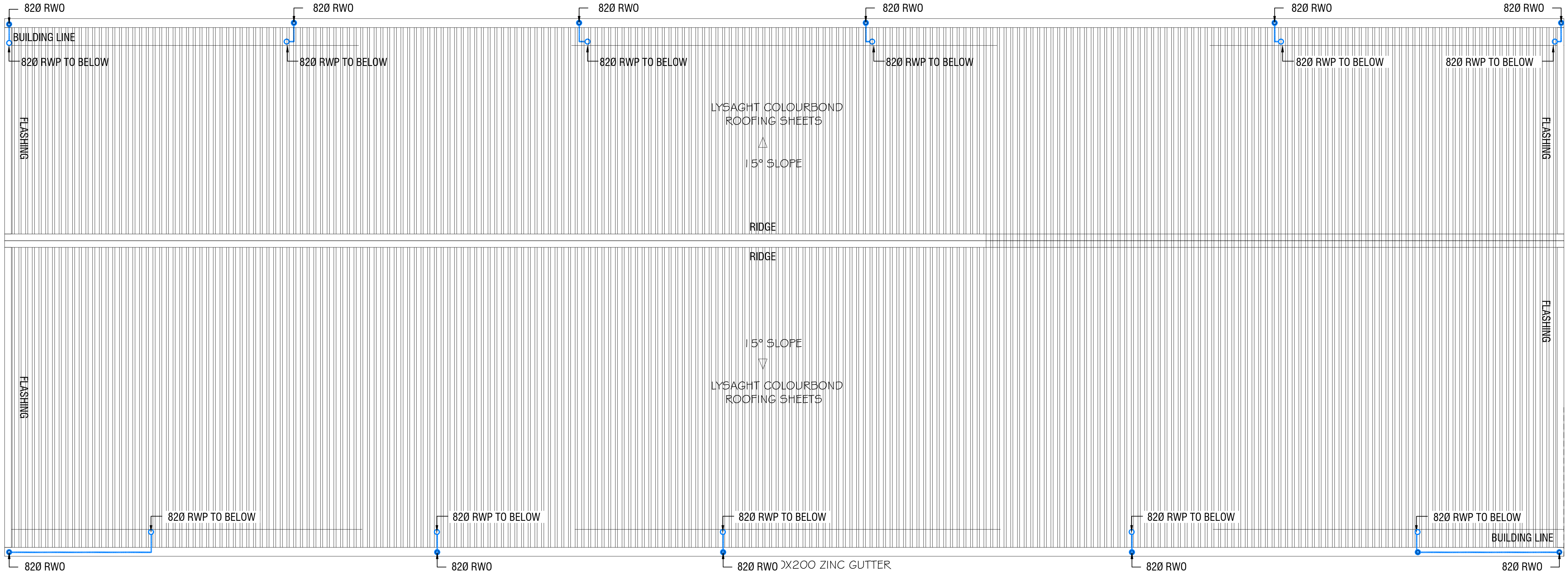
82Ø RWO
82Ø RWO
82Ø RWO
82Ø RWO
82Ø RWO
82Ø RWO
BUILDING LINE
82Ø RWP TO BELOW
82Ø RWP TO BELOW
82Ø RWP TO BELOW
82Ø RWP TO BELOW
82Ø RWP TO BELOW
82Ø RWP TO BELOW
FLASHING
FLASHING
LYSAGHT COLOURBOND
ROOFING SHEETS
15° SLOPE
RIDGE
RIDGE
FLASHING
15° SLOPE
LYSAGHT COLOURBOND
ROOFING SHEETS
FLASHING
82Ø RWP TO BELOW
82Ø RWP TO BELOW
82Ø RWP TO BELOW
82Ø RWP TO BELOW
82Ø RWP TO BELOW
BUILDING LINE
82Ø RWO
82Ø RWO
82Ø RWO
X200 ZINC GUTTER
82Ø RWO
82Ø RWO

LEGEND

FG	■	FLOOR GULLY
FD	▣	FLOOR DRAIN
WM	◎	40 Ø STUB FOR WASHING MACHINE
SP	━○	110 Ø SOIL PIPE
SVP	○	110 Ø SOIL VENT PIPE
WP	─○	82 Ø WASTE PIPE
WVP	○	82 Ø WASTE VENT PIPE
WP	─○	40 Ø WASTE PIPE
RWP	─○	82/50 Ø RAINWATER PIPE
RWO	◉	82/50 Ø DRAIN OUTLET
CD	─	25 Ø DRAIN PIPE
MHVP	─○	50 Ø MANHOLE VENT PIPE

ROOF DRAINAGE LAYOUT

SCALE 1:100

0 0.5 1 2 3 4 5

PHYSICAL FACILITIES DEVELOPMENT SECTION MINISTRY OF EDUCATION, REPUBLIC OF MALDIVES	PROJECT: 08 CLASSROOM AT R.UNGOOFAARU SCHOOL	ARCHITECT :
		ENGINEER :
		DRAWN :
	PROJECT REFERENCE	CHECKED :
	CLIENT: MINISTRY OF EDUCATION	DATE : 16.11.2021
	SCALE : AS GIVEN	DWG NO : S 03/ 13

AMMENDMENTS.

Issue	Date	Description

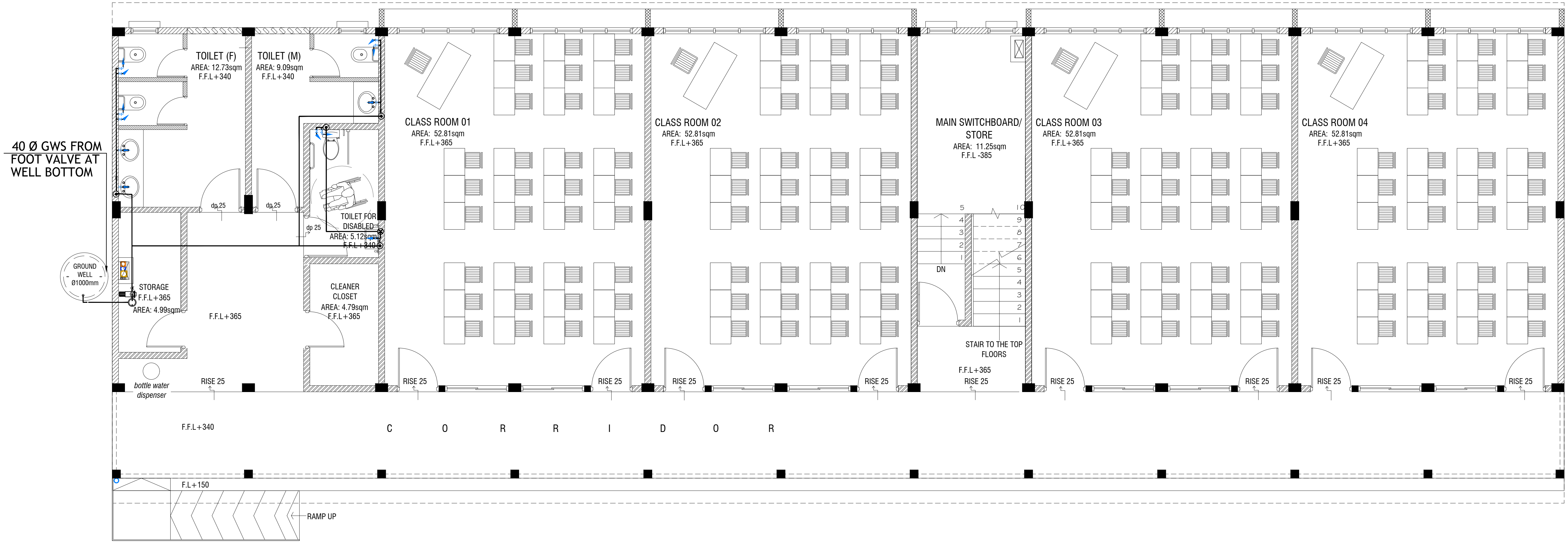
40 Ø GWS FROM
FOOT VALVE AT
WELL BOTTOM
GROUND
WELL
Ø1000mm
TOILET (F)
AREA: 12.73sqm
F.F.L+340
TOILET (M)
AREA: 9.09sqm
F.F.L+340
dp 25
dp 25
dp 25
TOILET FOR
DISABLED
AREA: 5.12sqm
F.F.L+340
STORAGE
F.F.L+365
AREA: 4.99sqm
F.F.L+365
CLEANER
CLOSET
AREA: 4.79sqm
F.F.L+365
bottle water
dispenser
RISE 25
CLASS ROOM 01
AREA: 52.81sqm
F.F.L+365
CLASS ROOM 02
AREA: 52.81sqm
F.F.L+365
MAIN SWITCHBOARD/
STORE
AREA: 11.25sqm
F.F.L -385
DN
STAIR TO THE TOP
FLOORS
F.F.L+365
CLASS ROOM 03
AREA: 52.81sqm
F.F.L+365
CLASS ROOM 04
AREA: 52.81sqm
F.F.L+365
RISE 25
F.F.L+340
CORRIDOR
F.L+150
RAMP UP

GROUND FLOOR PLUMBING LAYOUT

SCALE 1:100

0 0.5 1 2 3 4 5

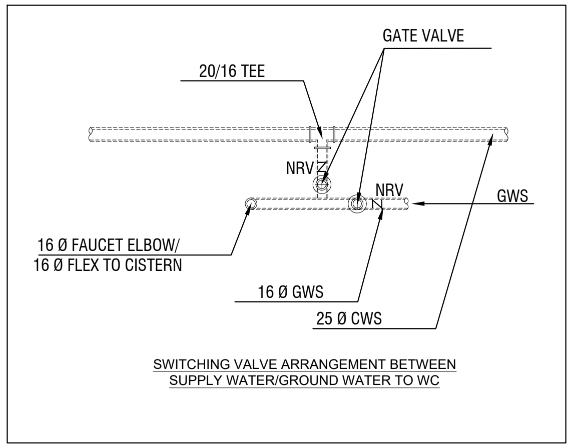
GATE VALVE
20/16 TEE
NRV
NRV
GWS
16 Ø FAUCET ELBOW/
16 Ø FLEX TO CISTERN
16 Ø GWS
25 Ø CWS

SWITCHING VALVE ARRANGEMENT BETWEEN
SUPPLY WATER/GROUND WATER TO WC

LEGEND

	16 Ø COLD WATER SUPPLY TO CISTERN
	16 Ø COLD WATER SUPPLY TO BIDET SHOWER
	16 Ø COLD WATER SUPPLY TO BASIN FAUCET / SINK
GV	GATE VALVE
—	25 Ø COLD WATER SUPPLY PIPES RUN UNDERGROUND
—	25 Ø COLD WATER SUPPLY PIPES RUN IN WALL / UNDER FALSE CEILING
⊙	RISE IN WALL
⊗	DROP IN WALL
CWS	COLD WATER SUPPLY
HWS	HOT WATER SUPPLY
—	GROUND WATER SUPPLY

NOTE:
- THE WELL SHALL BE RELOCATED ACCORDING TO THE SALINITY OF THE GROUND WATER.
- BASED ON WELL LOCATION PUMP CAPACITY TO BE DECIDED

PHYSICAL FACILITIES DEVELOPMENT SECTION MINISTRY OF EDUCATION, REPUBLIC OF MALDIVES	PROJECT: 08 CLASSROOM AT R.UNGOOFAARU SCHOOL	ARCHITECT : ENGINEER : DRAWN :
	PROJECT REFERENCE	CHECKED :
	CLIENT: MINISTRY OF EDUCATION	DATE : 16.11.2021
	SCALE : AS GIVEN	DWG NO : S 04/ 13

AMMENDMENTS.

Issue	Date	Description

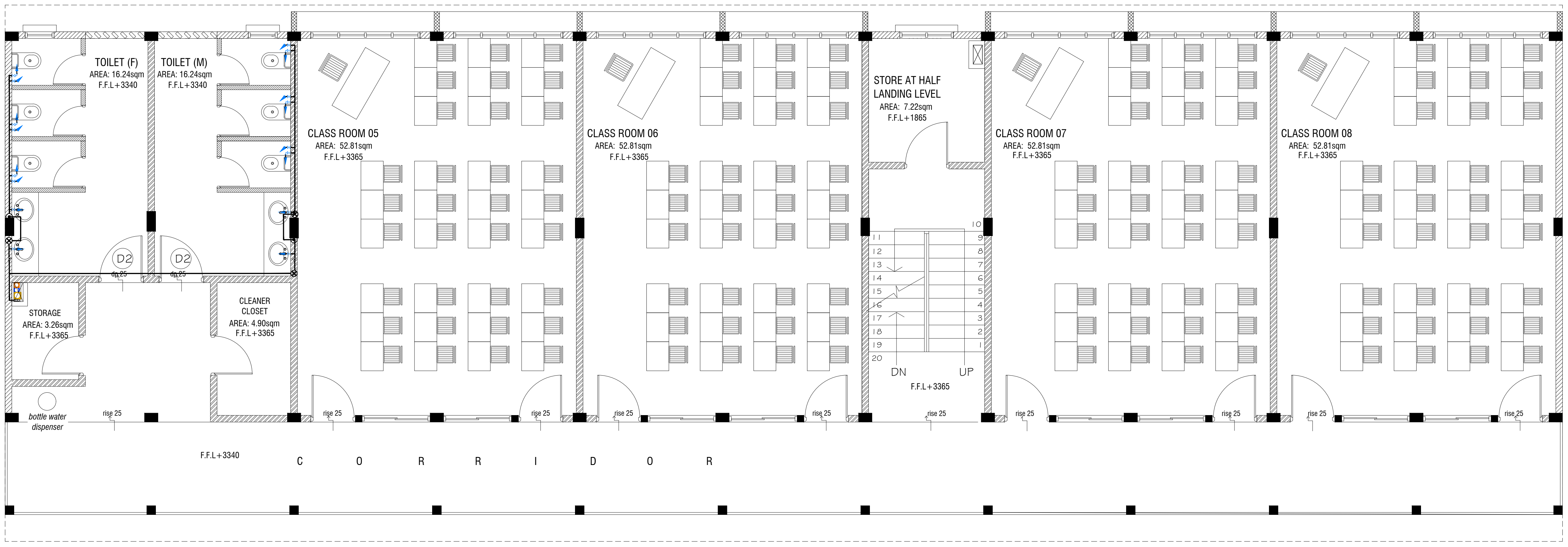
TOILET (F)
AREA: 16.24sqm
F.F.L+3340
TOILET (M)
AREA: 16.24sqm
F.F.L+3340
D2
dp 25
D2
dp 25
STORAGE
AREA: 3.26sqm
F.F.L+3365
CLEANER
CLOSET
AREA: 4.90sqm
F.F.L+3365
bottle water
dispenser
rise 25
CLASS ROOM 05
AREA: 52.81sqm
F.F.L+3365
rise 25
rise 25
CLASS ROOM 06
AREA: 52.81sqm
F.F.L+3365
rise 25
rise 25
STORE AT HALF
LANDING LEVEL
AREA: 7.22sqm
F.F.L+1865
1
2
3
4
5
6
7
8
9
10
11
12
13
14
15
16
17
18
19
20
DN
UP
F.F.L+3365
rise 25
CLASS ROOM 07
AREA: 52.81sqm
F.F.L+3365
rise 25
rise 25
CLASS ROOM 08
AREA: 52.81sqm
F.F.L+3365
rise 25
rise 25
F.F.L+3340
C O R R I D O R

LEGEND	
↑	16 Ø COLD WATER SUPPLY TO CISTERN
↗	16 Ø COLD WATER SUPPLY TO BIDET SHOWER
→	16 Ø COLD WATER SUPPLY TO BASIN FAUCET / SINK
⋈ GV	GATE VALVE
—	25 Ø COLD WATER SUPPLY PIPES RUN UNDERGROUND
—∘	25 Ø COLD WATER SUPPLY PIPES RUN IN WALL / UNDER FALSE CEILING
⊙	RISE IN WALL
⊗	DROP IN WALL
CWS	COLD WATER SUPPLY
HWS	HOT WATER SUPPLY
—	GROUND WATER SUPPLY

FIRST FLOOR PLUMBING LAYOUT

SCALE 1:100

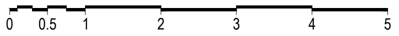

PHYSICAL FACILITIES DEVELOPMENT SECTION MINISTRY OF EDUCATION, REPUBLIC OF MALDIVES	PROJECT: 08 CLASSROOM AT R.UNGOOFAARU SCHOOL	ARCHITECT : ENGINEER : DRAWN :
	PROJECT REFERENCE	CHECKED :
	CLIENT: MINISTRY OF EDUCATION	DATE : 16.11.2021
	SCALE : AS GIVEN	DWG NO : S 05/ 13

AMMENDMENTS.		
Issue	Date	Description

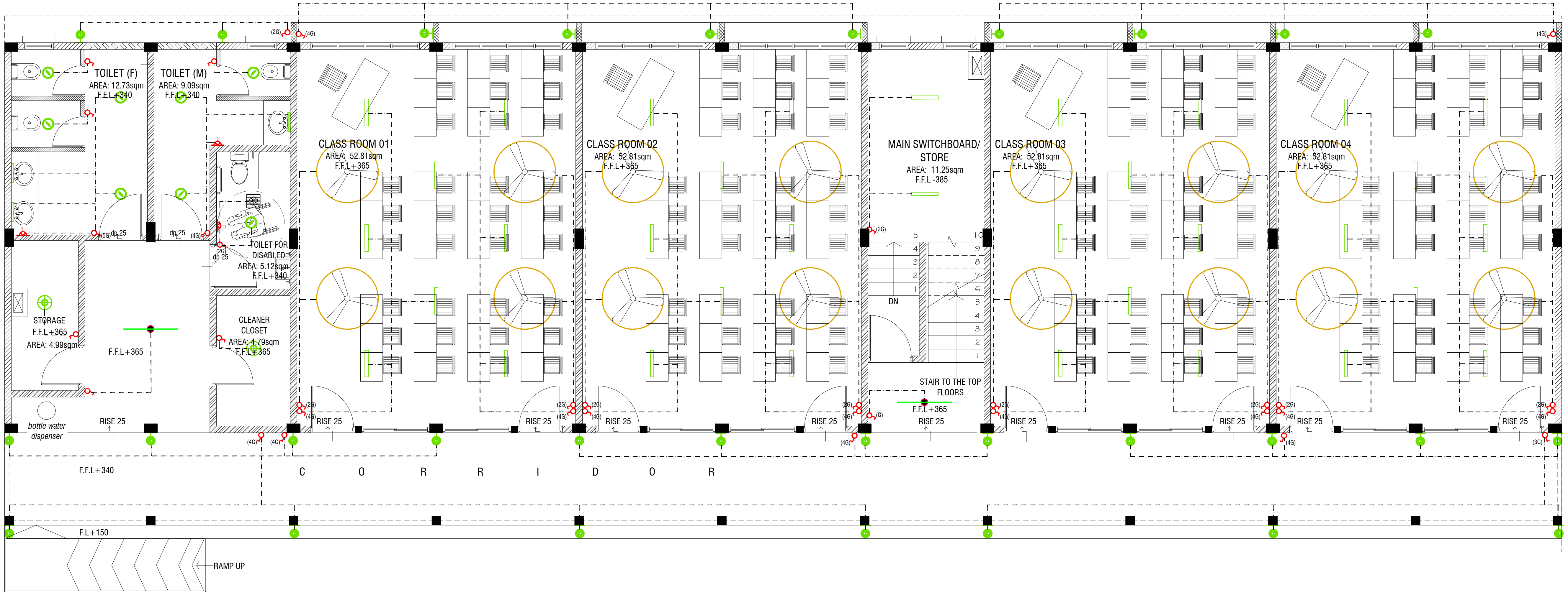
TOILET (F)
AREA: 12.73sqm
F.F.L+340
TOILET (M)
AREA: 9.09sqm
F.F.L+340
dp 25
dp 25
dp 25
TOILET FOR DISABLED
AREA: 5.12sqm
F.F.L+340
STORAGE
F.F.L+365
AREA: 4.99sqm
F.F.L+365
CLEANER CLOSET
AREA: 4.79sqm
F.F.L+365
bottle water dispenser
RISE 25
CLASS ROOM 01
AREA: 52.81sqm
F.F.L+365
CLASS ROOM 02
AREA: 52.81sqm
F.F.L+365
MAIN SWITCHBOARD/ STORE
AREA: 11.25sqm
F.F.L -385
DN
STAIR TO THE TOP FLOORS
F.F.L+365
CLASS ROOM 03
AREA: 52.81sqm
F.F.L+365
CLASS ROOM 04
AREA: 52.81sqm
F.F.L+365
(2G)
(4G)
(3G)
(5G)
(G)
RISE 25
F.F.L+340
C O R R I D O R
F.L+150
RAMP UP

GROUND FLOOR LIGHTING LAYOUT

SCALE 1:100

0 0.5 1 2 3 4 5

LEGEND

WPD	40W (IP 65) OUT DOOR WALL LIGHT
ML	MIRROR LIGHT (7W LED LIGHT)
H2	LED RECESSED DOWN LIGHT 12W
CL	LED CEILING LIGHT 18W
WP	LED TUBE LIGHT WITH WEATHER PROOF OPAL CASING
C2	LED CEILING DOWN LIGHT (18W)
	LIGHT SWITCH
- - - - - -	SWITCHING LINE
	EXHAUST FAN (CEILING MOUNTED)
	FLEX OUTLET
CL2	LED TUBE LIGHT WITH OPAL CASING
	CEILING FAN (52" - 54")

NOTE:

- ALL WIRING TO BE OF STELCO APPROVED STANDARDS
- SWITCH CONTROL = 1200MM FROM FLOOR FIN. LEVEL
-ALL LIGHTING POINTS CONNECTED TO THEIR RESPECTIVE DB
- POLYCARBONATE ENCLOSURE TO ALL SWITCH AND SOCKET WHICH ARE LOCATED AT THE OUTDOORS

PHYSICAL FACILITIES DEVELOPMENT SECTION
MINISTRY OF EDUCATION,
REPUBLIC OF MALDIVES

PROJECT:
08 CLASSROOM AT
R.UNGOOFAARU SCHOOL

PROJECT REFERENCE

CLIENT: MINISTRY OF EDUCATION

SCALE : AS GIVEN

ARCHITECT :

ENGINEER :

DRAWN :

CHECKED :

DATE : 16.11.2021

DWG NO : S 06/ 13

AMMENDMENTS.

Issue	Date	Description

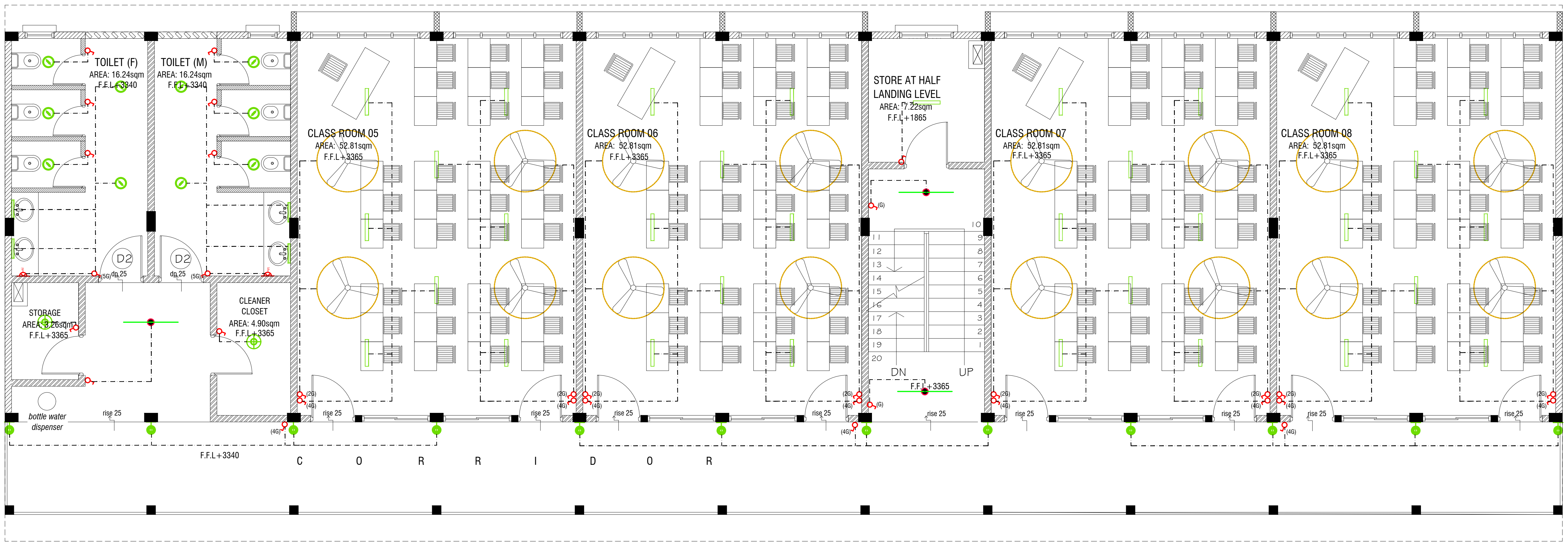
TOILET (F)
AREA: 16.24sqm
F.F.L+3340
TOILET (M)
AREA: 16.24sqm
F.F.L+3340
D2
dn 25
(5G)
STORAGE
AREA: 8.26sqm
F.F.L+3365
CLEANER
CLOSET
AREA: 4.90sqm
F.F.L+3365
bottle water
dispenser
rise 25
F.F.L+3340
CLASS ROOM 05
AREA: 52.81sqm
F.F.L+3365
CLASS ROOM 06
AREA: 52.81sqm
F.F.L+3365
STORE AT HALF
LANDING LEVEL
AREA: 7.22sqm
F.F.L+1865
CLASS ROOM 07
AREA: 52.81sqm
F.F.L+3365
CLASS ROOM 08
AREA: 52.81sqm
F.F.L+3365
(2G)
(4G)
(G)
DN
UP
F.F.L+3365
C O R R I D O R

FIRST FLOOR LIGHTING LAYOUT

SCALE 1:100

0 0.5 1 2 3 4 5

LEGEND

WPD	40W (IP 65) OUT DOOR WALL LIGHT
ML	MIRROR LIGHT (7W LED LIGHT)
H2	LED RECESSED DOWN LIGHT 12W
CL	LED CEILING LIGHT 18W
WP	LED TUBE LIGHT WITH WEATHER PROOF OPAL CASING
C2	LED CEILING DOWN LIGHT (18W)
	LIGHT SWITCH
	SWITCHING LINE
	FLEX OUTLET
CL2	LED TUBE LIGHT WITH OPAL CASING
	CEILING FAN (52" - 54")

NOTE:

- ALL WIRING TO BE OF STELCO APPROVED STANDARDS
- SWITCH CONTROL = 1200MM FROM FLOOR FIN. LEVEL
-ALL LIGHTING POINTS CONNECTED TO THEIR RESPECTIVE DB
- POLYCARBONATE ENCLOSURE TO ALL SWITCH AND SOCKET WHICH ARE LOCATED AT THE OUTDOORS

PHYSICAL FACILITIES DEVELOPMENT SECTION MINISTRY OF EDUCATION, REPUBLIC OF MALDIVES	PROJECT: 08 CLASSROOM AT R.UNGOOFAARU SCHOOL	ARCHITECT : ENGINEER : DRAWN :
	PROJECT REFERENCE	CHECKED :
	CLIENT: MINISTRY OF EDUCATION	DATE : 16.11.2021
	SCALE : AS GIVEN	DWG NO : S 07/ 13

AMMENDMENTS.

Issue	Date	Description

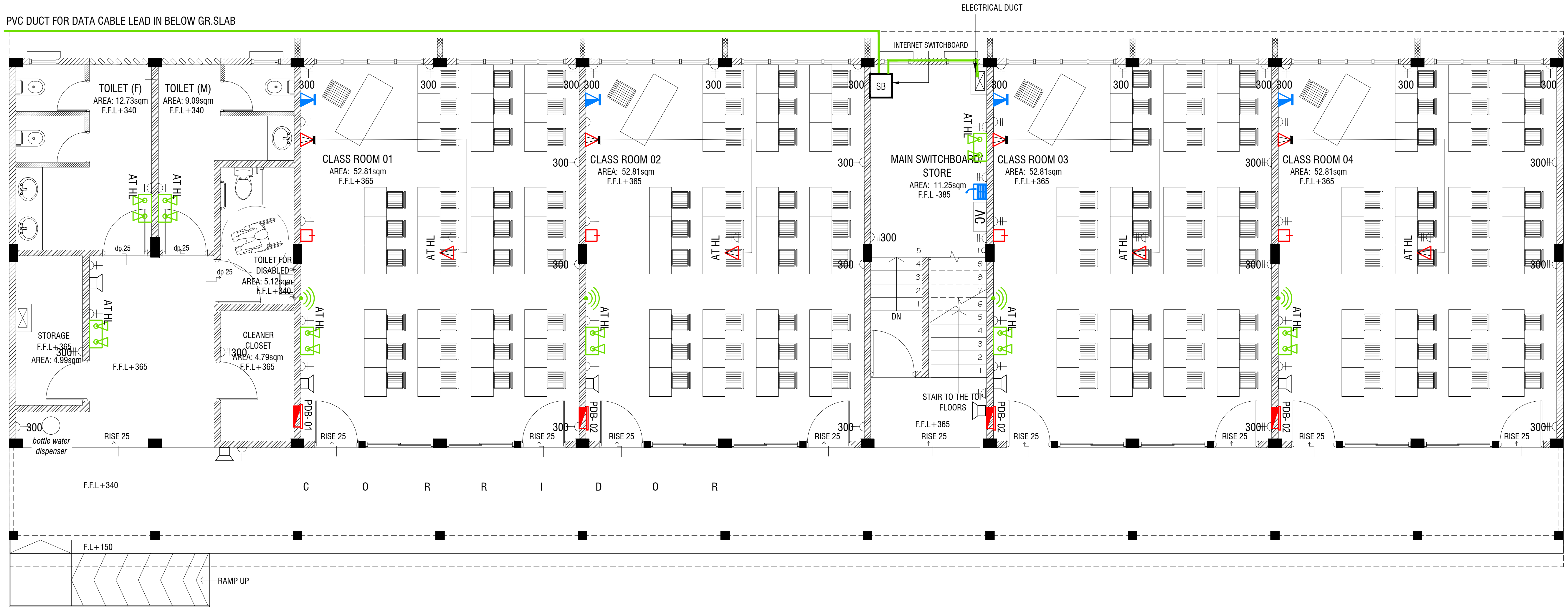
PVC DUCT FOR DATA CABLE LEAD IN BELOW GR.SLAB
ELECTRICAL DUCT
INTERNET SWITCHBOARD
SB
TOILET (F)
AREA: 12.73sqm
F.F.L+340
TOILET (M)
AREA: 9.09sqm
F.F.L+340
TOILET FOR DISABLED
AREA: 5.12sqm
F.F.L+340
STORAGE
F.F.L+365
AREA: 4.99sqm
CLEANER CLOSET
AREA: 4.79sqm
F.F.L+365
CLASS ROOM 01
AREA: 52.81sqm
F.F.L+365
CLASS ROOM 02
AREA: 52.81sqm
F.F.L+365
MAIN SWITCHBOARD/ STORE
AREA: 11.25sqm
F.F.L -385
CLASS ROOM 03
AREA: 52.81sqm
F.F.L+365
CLASS ROOM 04
AREA: 52.81sqm
F.F.L+365
AT HL
VC
300
dp 25
DN
STAIR TO THE TOP FLOORS
F.F.L+365
PDB- 01
PDB- 02
RISE 25
bottle water dispenser
F.F.L+365
F.F.L+340
C O R R I D O R
F.L+150
RAMP UP

GROUND FLOOR POWER LAYOUT

SCALE 1:100

0 0.5 1 2 3 4 5

NOTE:

1. ALL WIRING TO BE OF APPROVED STANDARDS
2. POWER/IT/COMPUTER SOCKETS = 300MM - 450MM FROM FLOOR FIN. LEVEL
3. SWITCH CONTROL / SOCKET = 1100MM - 1200MM FROM FLOOR FIN. LEVEL
4. KITCHEN SOCKETS / PANTRY SOCKETS = 1150MM - 1250MM FROM FLOOR FIN. LEVEL
5. AC = 2500MM - 2700MM FROM FLOOR FIN. LEVEL

LEGEND

▲	TELEPHONE OUTLET (RJ11, CONNECTOR)
⏚	13A POWER OUTLET
⏚	13A TWIN SOCKET OUTLET
△	HDMI,VGA & RAC AV SOCKET
▬	DISTRIBUTION BOX
◁	SPEAKERS
△	HDMI,VGA & RAC AV TWIN SOCKET
▲	TWIN COMPUTER NETWORK OUTLET
((•))	DATA POINT
□	TWO GANG / TV SOCKET
▶	15A.SWITCHED/ SPUR UNIT @ H.L.
☎	PAGING MIC
VC	VOLUME CONTROLLER
EM	EMERGENCY LIGHT

ALL ELECTRICAL COMPONENT TO BE CONNECTED TO THEIR RESPECTIVE DB

SPEAKERS TO BE CONNECTED TO THE MAIN PA SYSTEM OF THE SCHOOL

TO SUPPLY AND INSTALL PANEL BOARD WITH KWh METER. WIRING AND CONNECTION TO MAIN PANEL BOARD FROM MAIN ELECTRICAL NETWORK (LOCATED AT MAIN SWITCH BOARD / STORE)

PHYSICAL FACILITIES DEVELOPMENT SECTION MINISTRY OF EDUCATION, REPUBLIC OF MALDIVES	PROJECT: 08 CLASSROOM AT R.UNGOOFAARU SCHOOL	ARCHITECT :
		ENGINEER :
		DRAWN :
	PROJECT REFERENCE	CHECKED :
	CLIENT: MINISTRY OF EDUCATION	DATE : 16.11.2021
	SCALE : AS GIVEN	DWG NO : S 08/ 13

AMMENDMENTS.

Issue	Date	Description

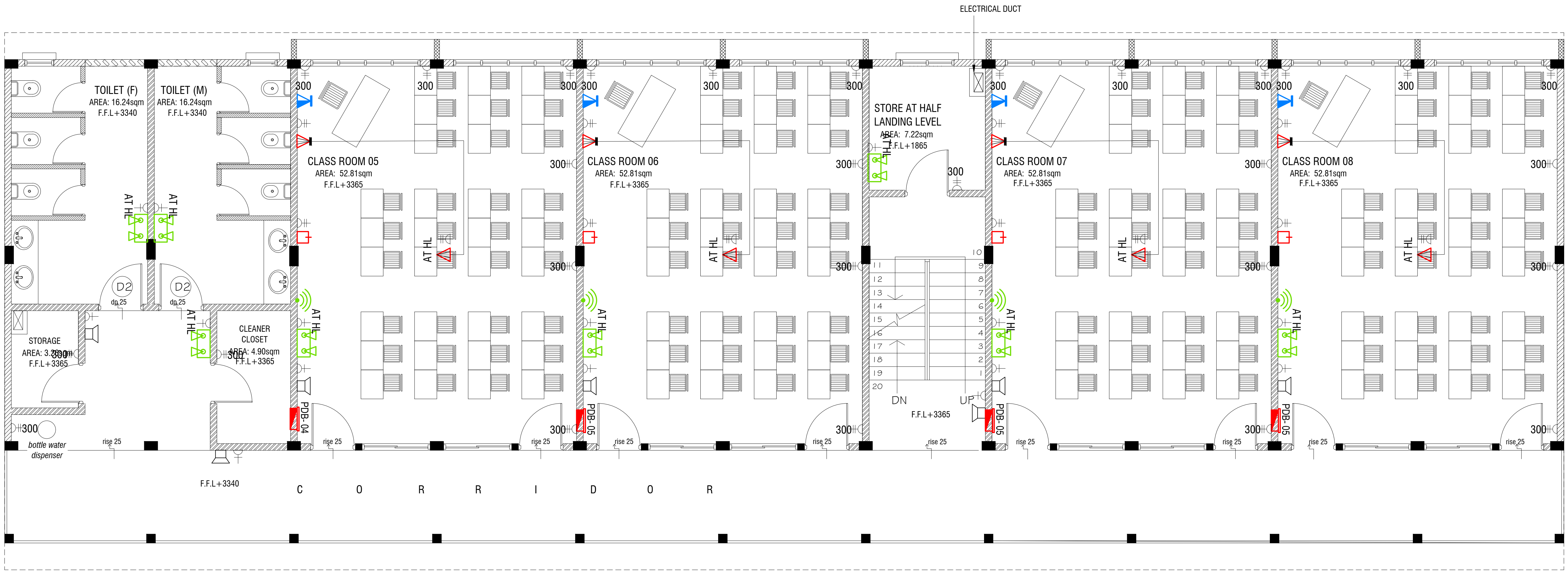
ELECTRICAL DUCT
TOILET (F)
AREA: 16.24sqm
F.F.L+3340
TOILET (M)
AREA: 16.24sqm
F.F.L+3340
STORAGE
AREA: 3.28sqm
F.F.L+3365
CLEANER
CLOSET
AREA: 4.90sqm
F.F.L+3365
CLASS ROOM 05
AREA: 52.81sqm
F.F.L+3365
CLASS ROOM 06
AREA: 52.81sqm
F.F.L+3365
STORE AT HALF
LANDING LEVEL
AREA: 7.22sqm
F.F.L+1865
CLASS ROOM 07
AREA: 52.81sqm
F.F.L+3365
CLASS ROOM 08
AREA: 52.81sqm
F.F.L+3365
AT HL
300
D2
dn 25
rise 25
PDB- 04
PDB- 05
DN
UP
F.F.L+3365
F.F.L+3340
bottle water
dispenser
C O R R I D O R

FIRST FLOOR POWER LAYOUT

SCALE 1:100

0 0.5 1 2 3 4 5

NOTE:

1. ALL WIRING TO BE OF APPROVED STANDARDS
2. POWER/IT/COMPUTER SOCKETS = 300MM - 450MM FROM FLOOR FIN. LEVEL
3. SWITCH CONTROL / SOCKET = 1100MM - 1200MM FROM FLOOR FIN. LEVEL
4. KITCHEN SOCKETS / PANTRY SOCKETS = 1150MM - 1250MM FROM FLOOR FIN. LEVEL
5. AC = 2500MM - 2700MM FROM FLOOR FIN. LEVEL

LEGEND

TELEPHONE OUTLET (RJ11, CONNECTOR)
13A POWER OUTLET
13A TWIN SOCKET OUTLET
HDMI,VGA & RAC AV SOCKET
DISTRIBUTION BOX
SPEAKERS
HDMI,VGA & RAC AV TWIN SOCKET
TWIN COMPUTER NETWORK OUTLET
DATA POINT
TWO GANG / TV SOCKET

PAGING MIC
VC VOLUME CONTROLLER
EM EMERGENCY LIGHT

ALL ELECTRICAL COMPONENT TO BE CONNECTED TO THEIR RESPECTIVE DB

SPEAKERS TO BE CONNECTED TO THE MAIN PA SYSTEM OF THE SCHOOL

PHYSICAL FACILITIES DEVELOPMENT SECTION MINISTRY OF EDUCATION, REPUBLIC OF MALDIVES	PROJECT: 08 CLASSROOM AT R.UNGOOFAARU SCHOOL	ARCHITECT : ENGINEER : DRAWN :
	PROJECT REFERENCE	CHECKED :
	CLIENT: MINISTRY OF EDUCATION	DATE : 16.11.2021
	SCALE : AS GIVEN	DWG NO : S 09/ 13

AMMENDMENTS.

Issue	Date	Description

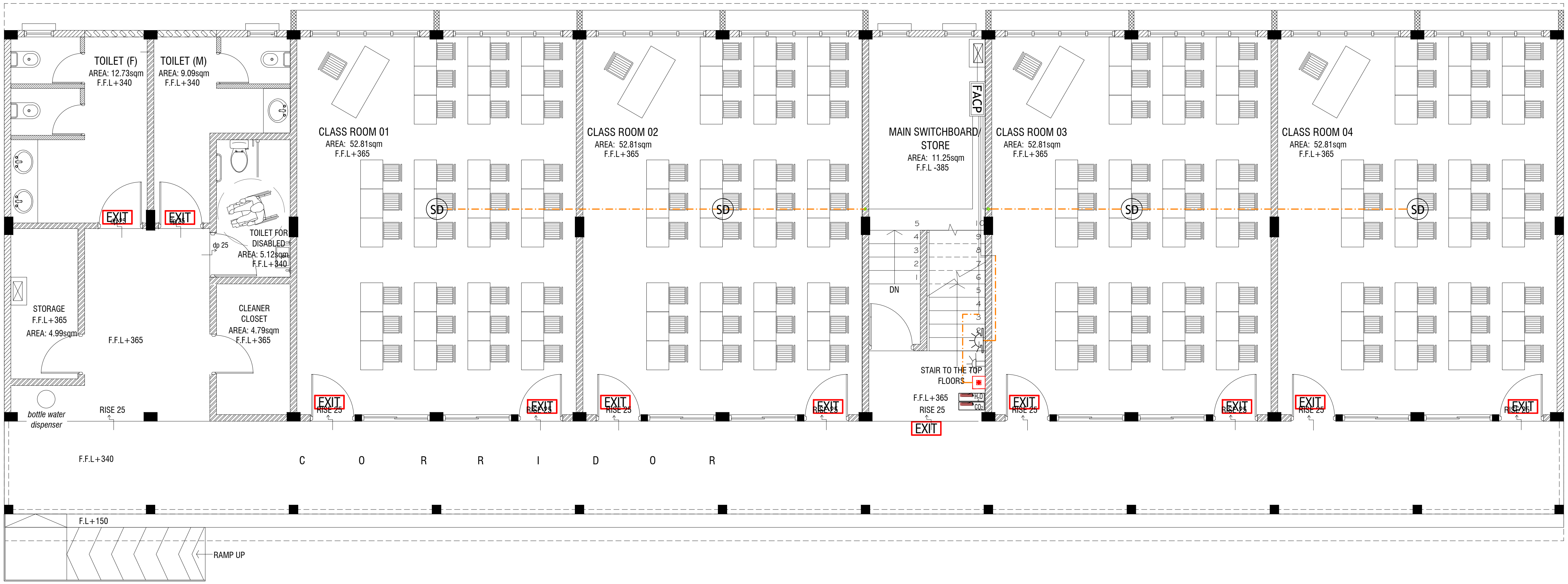
TOILET (F)
AREA: 12.73sqm
F.F.L+340
TOILET (M)
AREA: 9.09sqm
F.F.L+340
EXIT
EXIT
TOILET FOR DISABLED
AREA: 5.12sqm
F.F.L+340
dp 25
STORAGE
F.F.L+365
AREA: 4.99sqm
F.F.L+365
CLEANER CLOSET
AREA: 4.79sqm
F.F.L+365
bottle water dispenser
RISE 25
F.F.L+340
CLASS ROOM 01
AREA: 52.81sqm
F.F.L+365
SD
EXIT
RISE 25
CLASS ROOM 02
AREA: 52.81sqm
F.F.L+365
MAIN SWITCHBOARD/ STORE
AREA: 11.25sqm
F.F.L -385
FACP
DN
STAIR TO THE TOP FLOORS
F.F.L+365
RISE 25
CLASS ROOM 03
AREA: 52.81sqm
F.F.L+365
CLASS ROOM 04
AREA: 52.81sqm
F.F.L+365
C O R R I D O R
F.L+150
RAMP UP

LEGEND

- SD SMOKE DETECTOR
- HD HEAT DETECTOR
- EXIT EXIT SIGN (ELECTRIC)
- EM EMERGENCY LIGHT
- CO_2 EXTINGUISHER (LOAD: 2KG) IN POLYCARBONATE ENCLOUSURE(TYP.)
- H_2O EXTINGUISHER (LOAD: 9L) IN POLYCARBONATE ENCLOSURE(TYP.)
- MANUAL CALL POINT (RESETTABLE)
- BEACON
- SOUNDER/BELL (85 DB)
- ELR END OF LINE RESISTANCE
- FACP FIRE ALARM CONTROL PANEL
- 2.5MM² FIRE RETARDANT LOW SMOKE (FRLS) CABLES IN FRLS CONDUITS RUNNING TROUGH SCREED
- 2.5MM² FIRE RETARDANT LOW SMOKE (FRLS) CABLES IN FRLS CONDUITS RUNNING AT CEILING LEVEL

ALL FIRE CABLES AND CONDUITS SHOULD BE FIRE RETARDANT LOW SMOKE (FRLS) TYPE.

ALL FIRE RATED DOOR SHOULD COME WITHPACKING (EXPANSION SEAL TRAP)

1. ALL PIPES SHOULD BE GALVANIZED,SCHEDULE 40.
2. ALL PIPE SHALL BE PAINTED IN RED AS PER REGULATION.
3. ALL SUPPORT/BRACKET SHALL BE HOT DIPPED GALVANIZED TO 100MM
4.ALL FIRE EXTINGUISHER INSIDE CABINETS. (CABINET SHOULD BE PROVIDED)

-IF THE INSTALLATION OF CEILING IS CARRIED OUT LOWER THAN BEAM BOTTOM ,SMOKE DETECTORS SHOULD BE PLACED AS INDICATED ON THE DRAWING.
-ALTERNATIVELY IF THE INSTALLATION OF CEILING IS CARRIED OUT EQUAL TO BEAM BOTTOM OR IF THE CEILING IS NOT INSTALLED , SMOKE DETECTORS ARE TO BE PLACED IN BETWEEN EACH BEAM

GROUND FLOOR FDP LAYOUT

SCALE 1:100

0 0.5 1 2 3 4 5

PHYSICAL FACILITIES DEVELOPMENT SECTION
MINISTRY OF EDUCATION,
REPUBLIC OF MALDIVES

PROJECT:
08 CLASSROOM AT
R.UNGOOFAARU SCHOOL
PROJECT REFERENCE
CLIENT: MINISTRY OF EDUCATION
SCALE : AS GIVEN

ARCHITECT :
ENGINEER :
DRAWN :
CHECKED :
DATE : 16.11.2021
DWG NO : S 10/ 13

AMMENDMENTS.

Issue	Date	Description

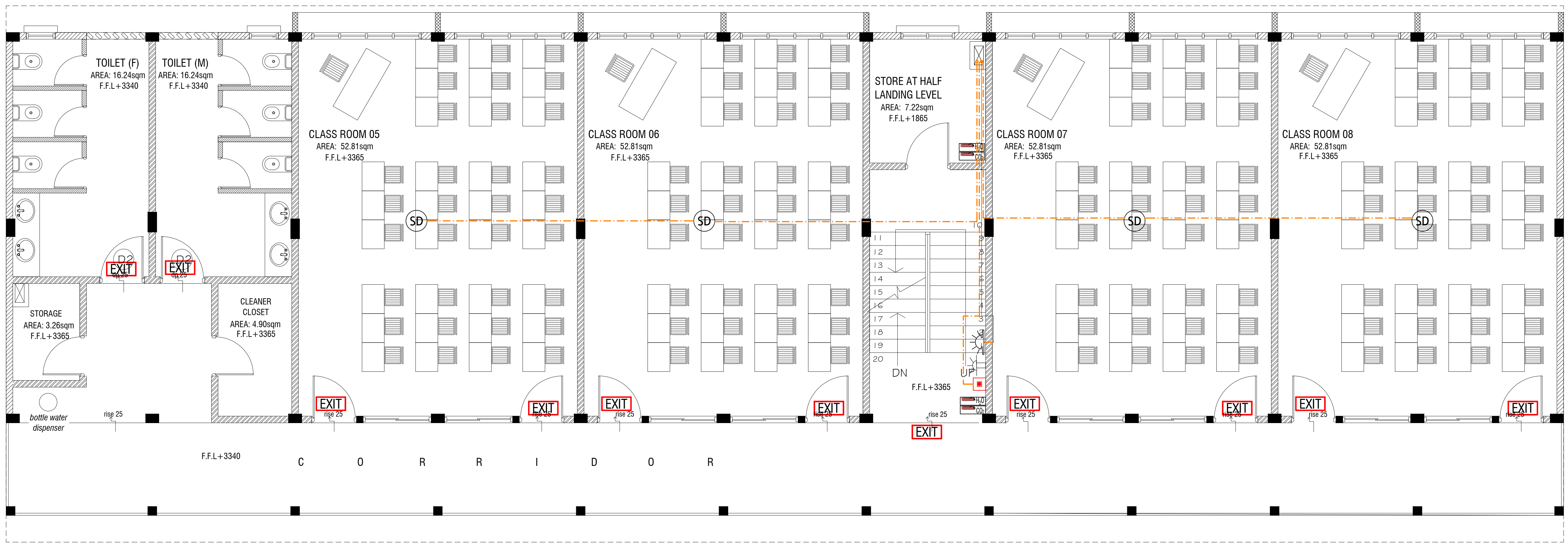
TOILET (F)
AREA: 16.24sqm
F.F.L+3340
TOILET (M)
AREA: 16.24sqm
F.F.L+3340
CLASS ROOM 05
AREA: 52.81sqm
F.F.L+3365
CLASS ROOM 06
AREA: 52.81sqm
F.F.L+3365
STORE AT HALF LANDING LEVEL
AREA: 7.22sqm
F.F.L+1865
CLASS ROOM 07
AREA: 52.81sqm
F.F.L+3365
CLASS ROOM 08
AREA: 52.81sqm
F.F.L+3365
SD
EXIT
STORAGE
AREA: 3.26sqm
F.F.L+3365
CLEANER CLOSET
AREA: 4.90sqm
F.F.L+3365
bottle water dispenser
rise 25
DN
UP
F.F.L+3365
F.F.L+3340
C O R R I D O R

LEGEND

(SD) SMOKE DETECTOR

(HD) HEAT DETECTOR

EXIT EXIT SIGN (ELECTRIC)

EM EMERGENCY LIGHT

CO_2 EXTINGUISHER (LOAD: 2KG) IN POLYCARBONATE ENCLOUSURE(TYP.)

H_2O EXTINGUISHER (LOAD: 9L) IN POLYCARBONATE ENCLOSURE(TYP.)

MANUAL CALL POINT (RESETTABLE)

BEACON

SOUNDER/BELL (85 DB)

ELR END OF LINE RESISTANCE

FACP FIRE ALARM CONTROL PANEL

-·-·- 2.5MM² FIRE RETARDANT LOW SMOKE (FRLS) CABLES IN FRLS CONDUITS RUNNING TROUGH SCREED

-·-·- 2.5MM² FIRE RETARDANT LOW SMOKE (FRLS) CABLES IN FRLS CONDUITS RUNNING AT CEILING LEVEL

ALL FIRE CABLES AND CONDUITS SHOULD BE FIRE RETARDANT LOW SMOKE (FRLS) TYPE.

ALL FIRE RATED DOOR SHOULD COME WITHPACKING (EXPANSION SEAL TRAP)

1. ALL PIPES SHOULD BE GALVANIZED,SCHEDULE 40.
2. ALL PIPE SHALL BE PAINTED IN RED AS PER REGULATION.
3. ALL SUPPORT/BRACKET SHALL BE HOT DIPPED GALVANIZED TO 100MM
4.ALL FIRE EXTINGUISHER INSIDE CABINETS. (CABINET SHOULD BE PROVIDED)

-IF THE INSTALLATION OF CEILING IS CARRIED OUT LOWER THAN BEAM BOTTOM ,SMOKE DETECTORS SHOULD BE PLACED AS INDICATED ON THE DRAWING.
-ALTERNATIVELY IF THE INSTALLATION OF CEILING IS CARRIED OUT EQUAL TO BEAM BOTTOM OR IF THE CEILING IS NOT INSTALLED , SMOKE DETECTORS ARE TO BE PLACED IN BETWEEN EACH BEAM

FIRST FLOOR FDP LAYOUT

SCALE 1:100

0 0.5 1 2 3 4 5

PHYSICAL FACILITIES DEVELOPMENT SECTION MINISTRY OF EDUCATION, REPUBLIC OF MALDIVES	PROJECT: 08 CLASSROOM AT R.UNGOOFAARU SCHOOL	ARCHITECT : ENGINEER : DRAWN :
	PROJECT REFERENCE	CHECKED :
	CLIENT: MINISTRY OF EDUCATION	DATE : 16.11.2021
	SCALE : AS GIVEN	DWG NO : S 11/ 13

AMMENDMENTS.

Issue	Date	Description

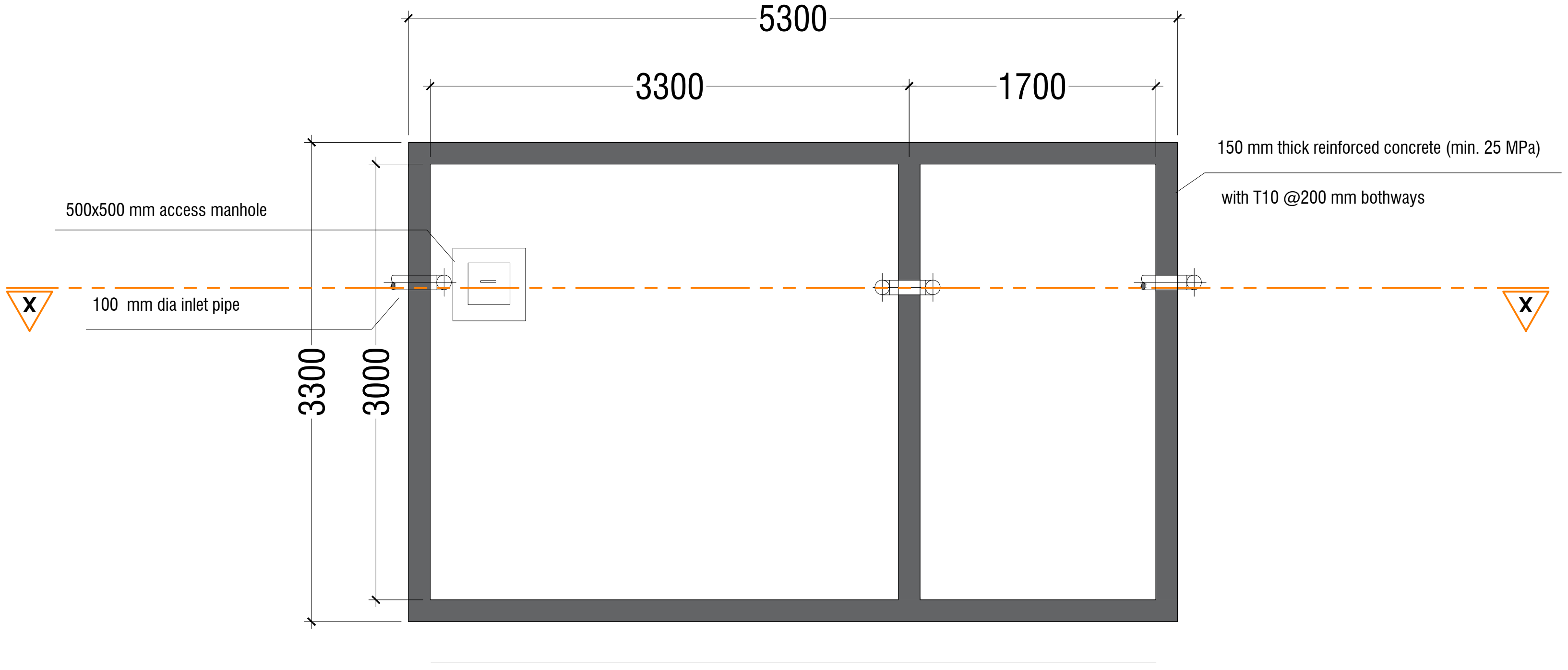
5300
3300
1700
150 mm thick reinforced concrete (min. 25 MPa)
with T10 @200 mm bothways
500x500 mm access manhole
100 mm dia inlet pipe
X
X
3300
3000

PLAN

SCALE 1:50

0 0.5 1 2 3 4 5

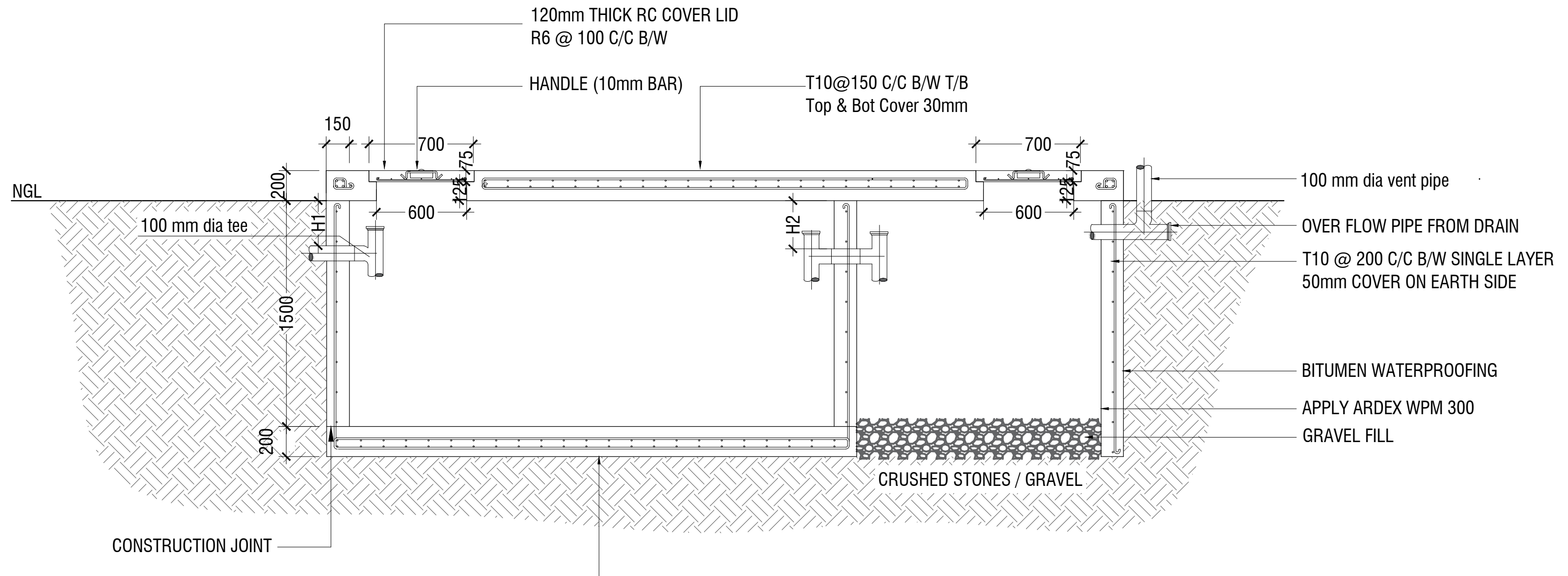
120mm THICK RC COVER LID
R6 @ 100 C/C B/W
HANDLE (10mm BAR)
T10@150 C/C B/W T/B
Top & Bot Cover 30mm
150
700
700
75
75
125
125
600
600
200
NGL
100 mm dia tee
H1
H2
1500
200
100 mm dia vent pipe
OVER FLOW PIPE FROM DRAIN
T10 @ 200 C/C B/W SINGLE LAYER
50mm COVER ON EARTH SIDE
BITUMEN WATERPROOFING
APPLY ARDEX WPM 300
GRAVEL FILL
CRUSHED STONES / GRAVEL
CONSTRUCTION JOINT
T10@150 C/C B/W T/B
Bot Cover 50mm
Top Cover 30mm

SEPTIC TANK DETAIL

SCALE 1:50

0 0.5 1 2 3 4 5

SECTION X-X

SCALE 1:50

0 0.5 1 2 3 4 5

NOTE:

H1 < H2

- TOP AND BOTTOM OF SEPTIC TANK SHOULD BE OF 200mm THICK
- BITUMINOUS WATERPROOFING TO BE APPLIED BELOW GROUND SURFACE
- REINFORCEMENT TO HAVE A COVER OF 50mm FROM EARTH

PHYSICAL FACILITIES DEVELOPMENT SECTION MINISTRY OF EDUCATION, REPUBLIC OF MALDIVES	PROJECT: 08 CLASSROOM AT R.UNGOOFAARU SCHOOL	ARCHITECT :
		ENGINEER :
		DRAWN :
	PROJECT REFERENCE	CHECKED :
	CLIENT: MINISTRY OF EDUCATION	DATE : 16.11.2021
	SCALE : AS GIVEN	DWG NO : S 11/ 12

AMMENDMENTS.		
Issue	Date	Description

WATER TANK WALL TOP & BOTTOM SLAB

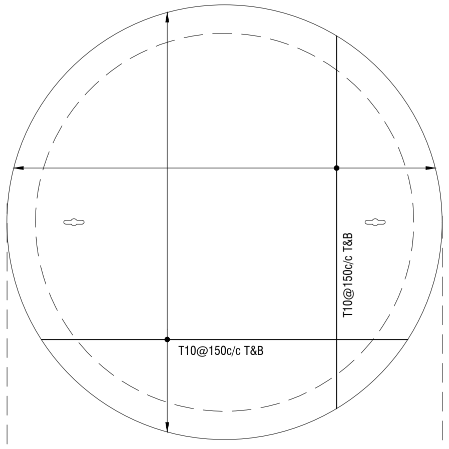
T10@150c/c T&B
T10@150c/c T&B

WATER TANK WALL REINF.

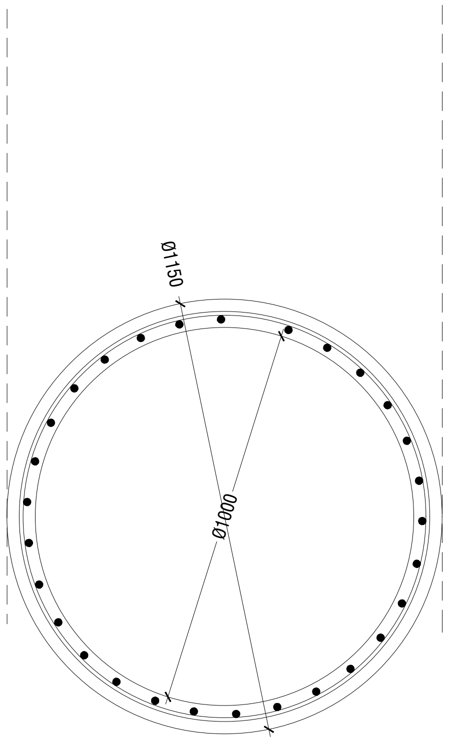
Ø1150
Ø1000

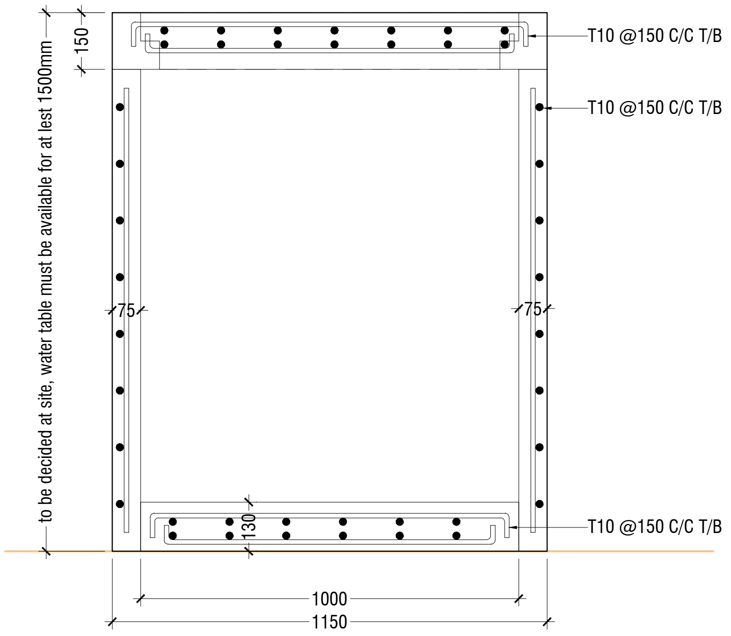
to be decided at site, water table must be available for at lest 1500mm
150
T10 @150 C/C T/B
T10 @150 C/C T/B
75
75
130
T10 @150 C/C T/B
1000
1150

WATER TANK SECTION

WATER TANK DETAILS

SCALE 1:20

0 0.1 0.2 0.4 0.6 0.8 1

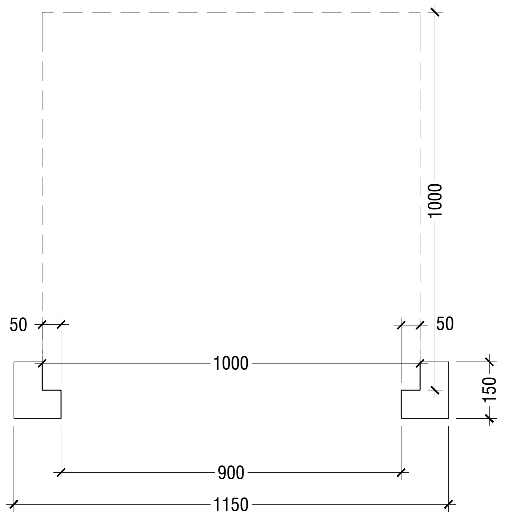
1000
50
50
1000
150
900
1150

ELEVATION

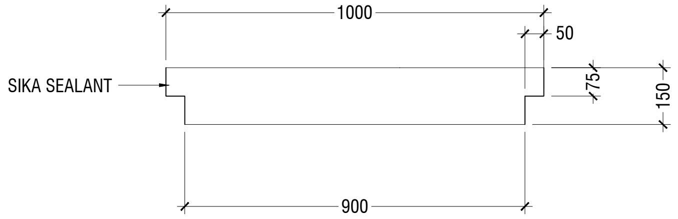
1000
50
SIKA SEALANT
75
150
900

SECTION

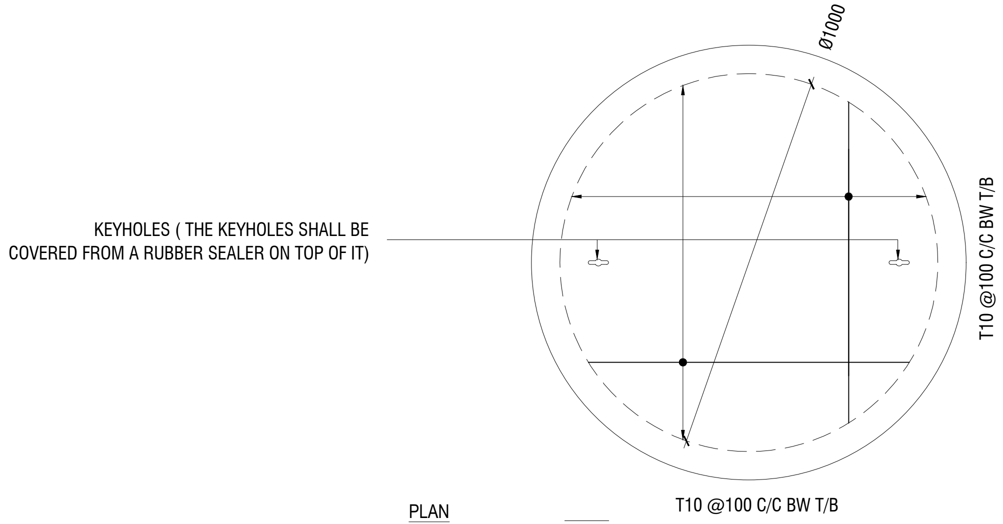
Ø1000
KEYHOLES (THE KEYHOLES SHALL BE
COVERED FROM A RUBBER SEALER ON TOP OF IT)
T10 @100 C/C BW T/B
T10 @100 C/C BW T/B

PLAN

NOTE:

- ALL CONCRETE WORKS BELOW GROUND AND AT TERRACE LEVEL TO BE TREATED WITH 'SIKA' WATERPROOFING CHEMICAL OR EQUIVALENT
- PROVIDE PROVISION FOR WATER ENTRANCE THROUGH THE BASE

WATER TANK LID DETAILS

SCALE 1:20

0 0.1 0.2 0.4 0.6 0.8 1

PHYSICAL FACILITIES DEVELOPMENT SECTION MINISTRY OF EDUCATION, REPUBLIC OF MALDIVES	PROJECT: 08 CLASSROOM AT R.UNGOOFAARU SCHOOL	ARCHITECT :	
		ENGINEER :	
		DRAWN :	
	PROJECT REFERENCE	CHECKED :	
	CLIENT: MINISTRY OF EDUCATION	DATE : 16.11.2021	
	SCALE : AS GIVEN	DWG NO : S 13/ 13	

AMMENDMENTS.		
Issue	Date	Description